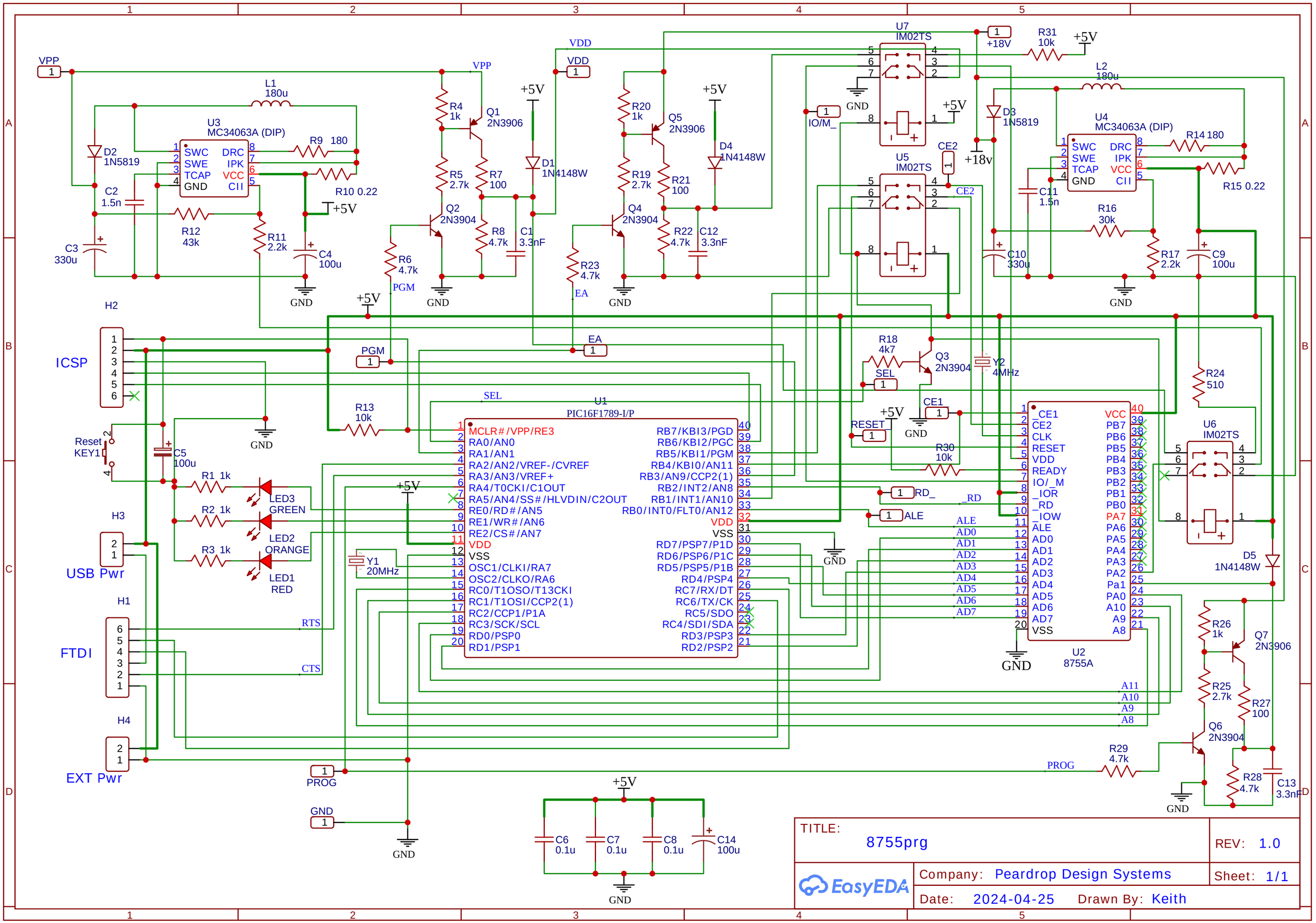

TITLE: 8755prg

REV: 1.0

Company: Peardrop Design Systems

Sheet: 1/1

Date: 2024-04-25

Drawn By: Keith