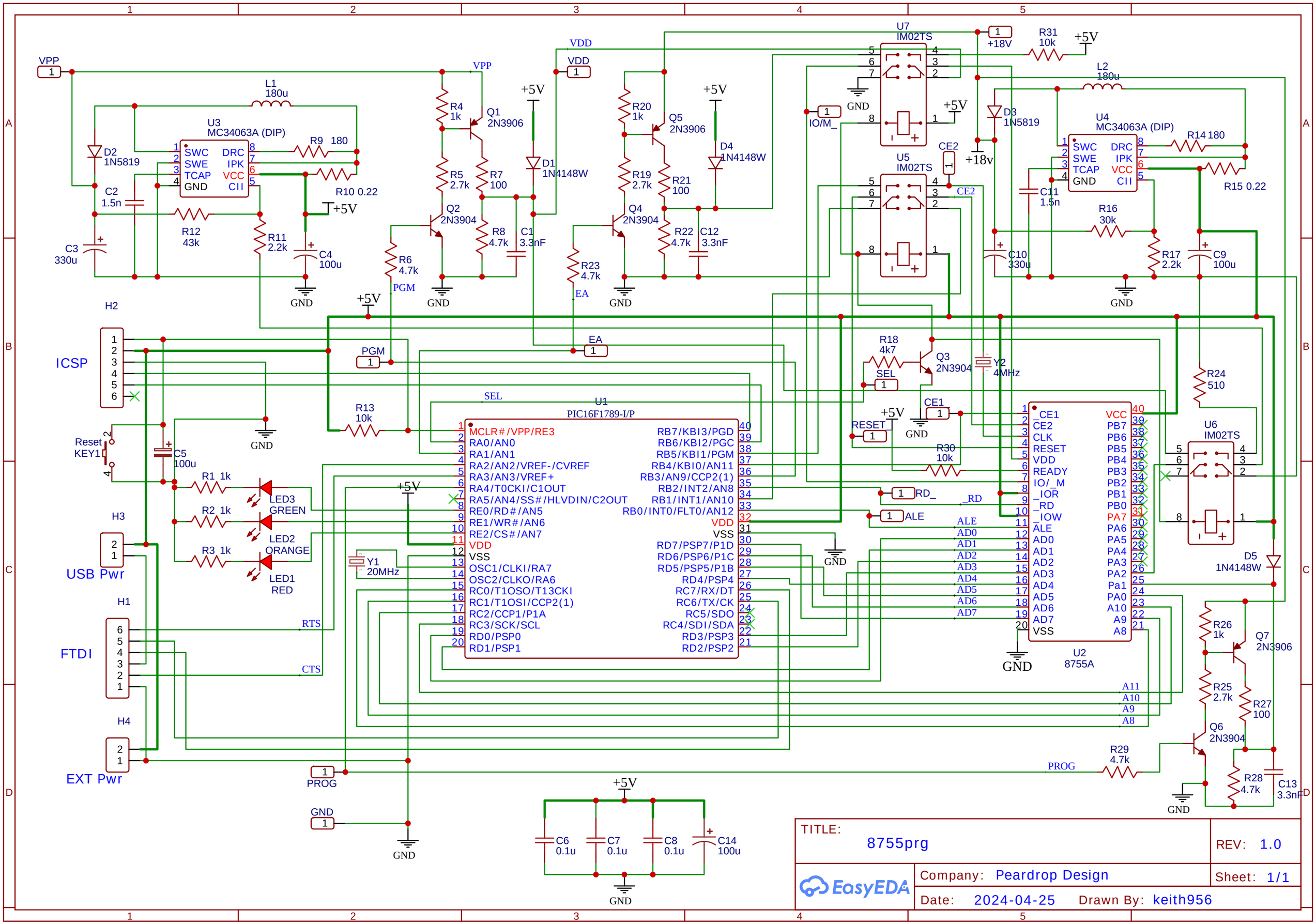
VPP
L1
180u
U3
MC34063A (DIP)
SWC
SWE
TCAP
GND
DRC
IPK
VCC
CII
D2
1N5819
C2
1.5n
R9 180
R10 0.22
R12
43k
R11
2.2k
C3
330u
C4
100u
+5V
GND
R4
1k
Q1
2N3906
R5
2.7k
R7
100
Q2
2N3904
R8
4.7k
C1
3.3nF
R6
4.7k
PGM
VDD
D1
1N4148W
R20
1k
Q5
2N3906
R19
2.7k
R21
100
Q4
2N3904
R22
4.7k
C12
3.3nF
R23
4.7k
EA
D4
1N4148W
U7
IM02TS
+18V
R31
10k
IO/M_
CE2
U5
IM02TS
+18v
D3
1N5819
L2
180u
U4
MC34063A (DIP)
R14 180
R15 0.22
C11
1.5n
R16
30k
R17
2.2k
C9
100u
C10
330u
H2
ICSP
Reset
KEY1
C5
100u
R13
10k
SEL
U1
PIC16F1789-I/P
MCLR#/VPP/RE3
RA0/AN0
RA1/AN1
RA2/AN2/VREF-/CVREF
RA3/AN3/VREF+
RA4/T0CKI/C1OUT
RA5/AN4/SS#/HLVDIN/C2OUT
RE0/RD#/AN5
RE1/WR#/AN6
RE2/CS#/AN7
VDD
VSS
OSC1/CLKI/RA7
OSC2/CLKO/RA6
RC0/T1OSO/T13CKI
RC1/T1OSI/CCP2(1)
RC2/CCP1/P1A
RC3/SCK/SCL
RD0/PSP0
RD1/PSP1
RB7/KBI3/PGD
RB6/KBI2/PGC
RB5/KBI1/PGM
RB4/KBI0/AN11
RB3/AN9/CCP2(1)
RB2/INT2/AN8
RB1/INT1/AN10
RB0/INT0/FLT0/AN12
VDD
VSS
RD7/PSP7/P1D
RD6/PSP6/P1C
RD5/PSP5/P1B
RD4/PSP4
RC7/RX/DT
RC6/TX/CK
RC5/SDO
RC4/SDI/SDA
RD3/PSP3
RD2/PSP2
R1 1k
R2 1k
R3 1k
LED3
GREEN
LED2
ORANGE
LED1
RED
H3
USB Pwr
H1
FTDI
RTS
CTS
H4
EXT Pwr
Y1
20MHz
PROG
R18
4k7
Q3
2N3904
Y2
4MHz
RESET
CE1
R30
10k
RD_
ALE
AD0
AD1
AD2
AD3
AD4
AD5
AD6
AD7
_CE1
CE2
CLK
RESET
VDD
READY
IO/_M
_IOR
_RD
_IOW
ALE
AD0
AD1
AD2
AD3
AD4
AD5
AD6
AD7
VSS
VCC
PB7
PB6
PB5
PB4
PB3
PB2
PB1
PB0
PA7
PA6
PA5
PA4
PA3
PA2
Pa1
PA0
A10
A9
A8
U2
8755A
A11
A10
A9
A8
R24
510
U6
IM02TS
D5
1N4148W
R26
1k
Q7
2N3906
R25
2.7k
R27
100
Q6
2N3904
R28
4.7k
C13
3.3nF
R29
4.7k
C6
0.1u
C7
0.1u
C8
0.1u
C14
100u
TITLE:
8755prg
REV: 1.0
Company: Peardrop Design
Sheet: 1/1
Date: 2024-04-25
Drawn By: keith956
EasyEDA