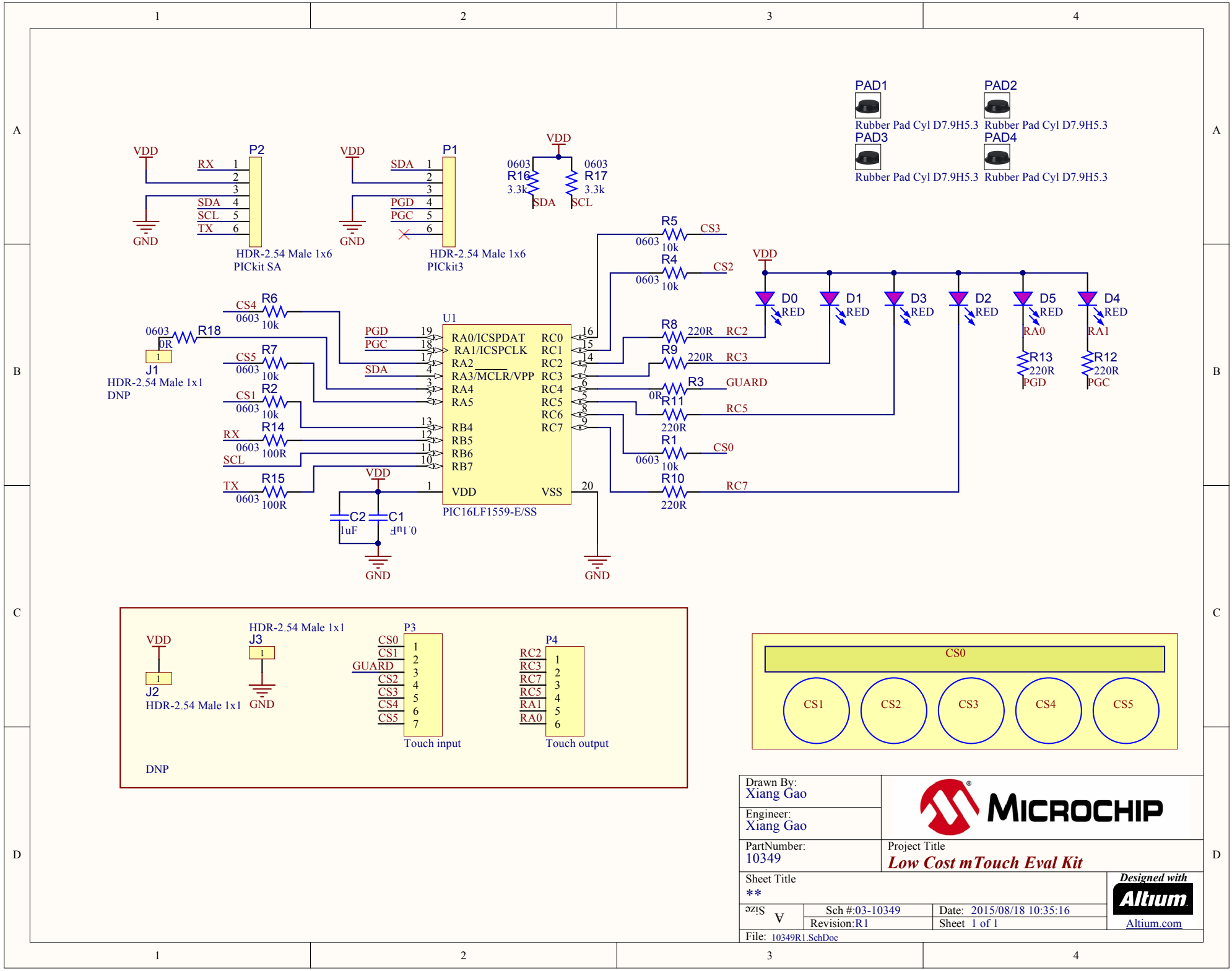
PAD1
Rubber Pad Cyl D7.9H5.3
PAD2
Rubber Pad Cyl D7.9H5.3
PAD3
Rubber Pad Cyl D7.9H5.3
PAD4
Rubber Pad Cyl D7.9H5.3
VDD
P2
RX
SDA
SCL
TX
GND
HDR-2.54 Male 1x6
PICkit SA
P1
SDA
PGD
PGC
HDR-2.54 Male 1x6
PICkit3
R16
3.3k
R17
3.3k
0603
R5
10k
CS3
R4
10k
CS2
D0
D1
D3
D2
D5
D4
RED
RA0
RA1
R13
220R
PGD
R12
220R
PGC
R6
CS4
R18
0R
J1
HDR-2.54 Male 1x1
DNP
R7
CS5
R2
CS1
R14
100R
R15
100R
U1
PIC16LF1559-E/SS
RA0/ICSPDAT
RA1/ICSPCLK
RA2
RA3/MCLR/VPP
RA4
RA5
RB4
RB5
RB6
RB7
VDD
VSS
RC0
RC1
RC2
RC3
RC4
RC5
RC6
RC7
R8
220R
RC2
R9
220R
RC3
R3
GUARD
R11
220R
RC5
R1
CS0
R10
220R
RC7
C2
1uF
C1
0.1uF
HDR-2.54 Male 1x1
J3
J2
HDR-2.54 Male 1x1
P3
CS0
CS1
GUARD
CS2
CS3
CS4
CS5
Touch input
P4
RC2
RC3
RC7
RC5
RA1
RA0
Touch output
DNP
CS0
CS1
CS2
CS3
CS4
CS5
Drawn By:
Xiang Gao
Engineer:
Xiang Gao
PartNumber:
10349
Project Title
Low Cost mTouch Eval Kit
Sheet Title
**
Size
A
Sch #:03-10349
Revision:R1
Date: 2015/08/18 10:35:16
Sheet 1 of 1
Designed with
Altium
Altium.com
File: 10349R1.SchDoc