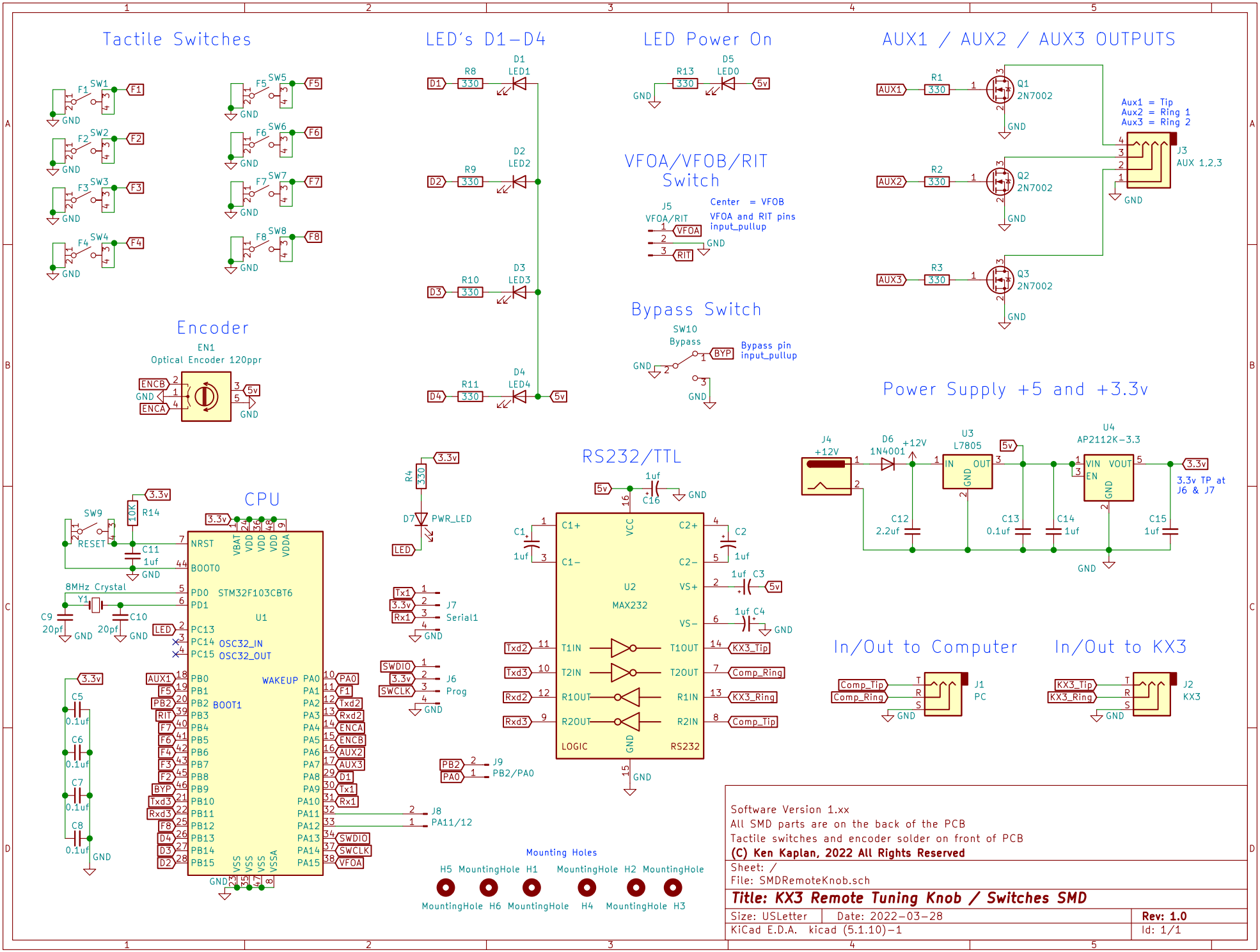

Software Version 1.xx
All SMD parts are on the back of the PCB
Tactile switches and encoder solder on front of PCB

(C) Ken Kaplan, 2022 All Rights Reserved

Sheet: /
File: SMDRemoteKnob.sch

Title: KX3 Remote Tuning Knob / Switches SMD

Size: USLetter	Date: 2022-03-28	Rev: 1.0
KiCad E.D.A. kicad (5.1.10)-1		Id: 1/1