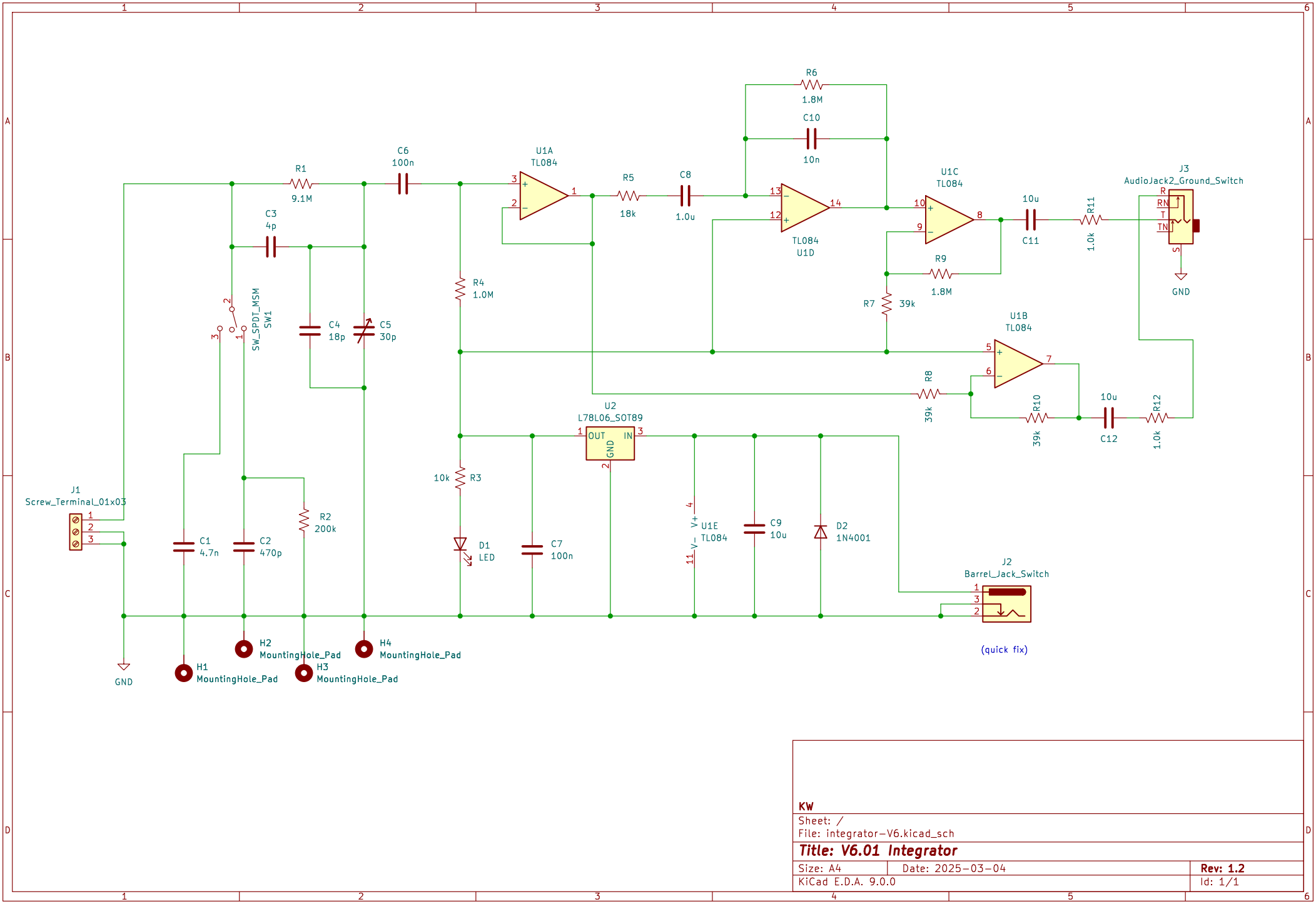

KW

Sheet: /

File: integrator-V6.kicad_sch

Title: V6.01 Integrator

Size: A4	Date: 2025-03-04	**Rev: 1.2**
KiCad E.D.A. 9.0.0		Id: 1/1