NOTES:

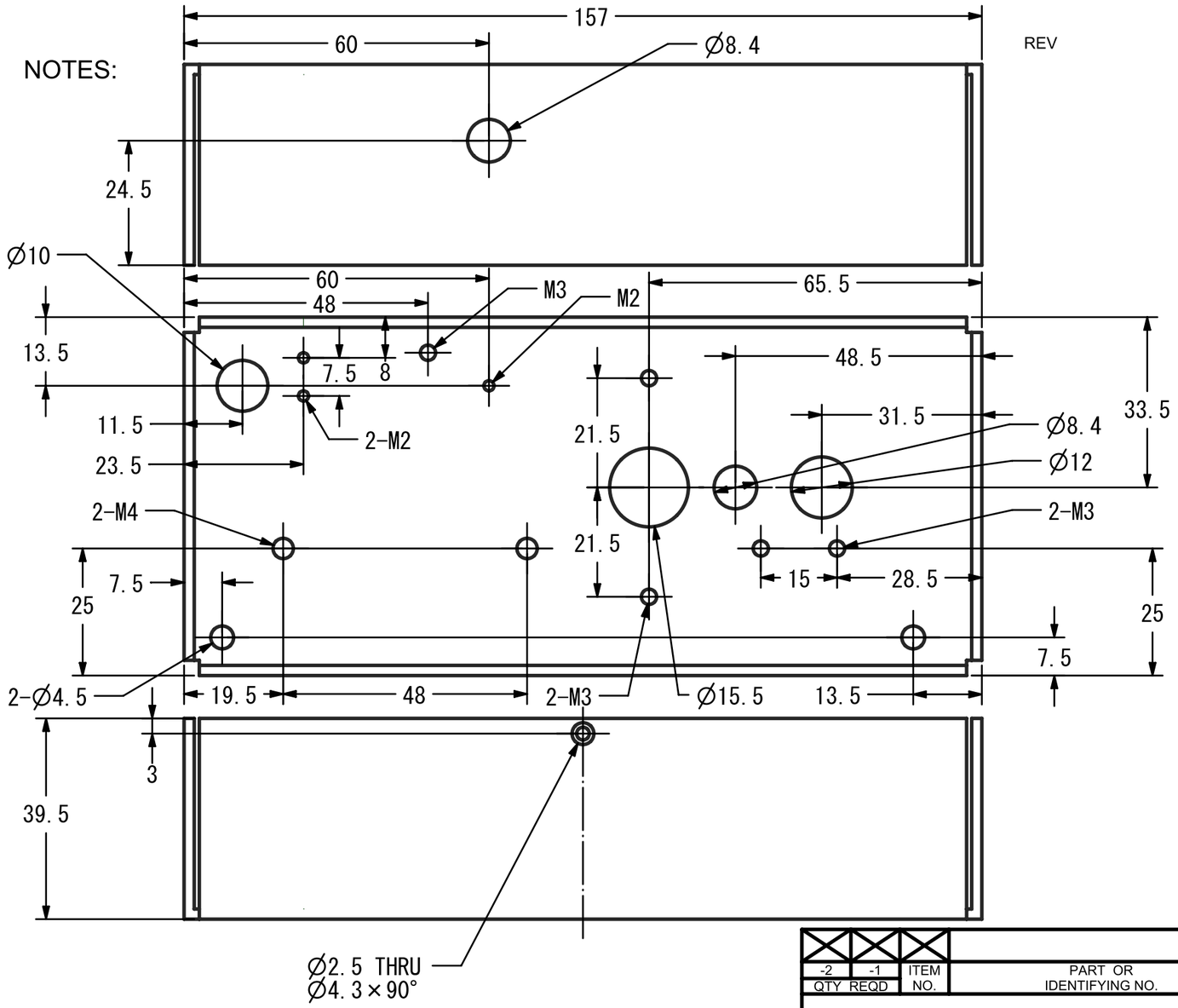

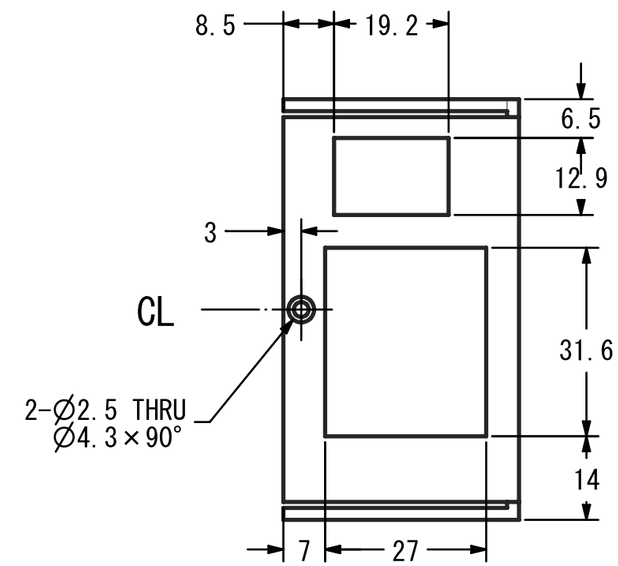

REVISION HISTORY

REV	DESCRIPTION	INCORP BY	DATE	CHECKED

PARTS LIST

-2 QTY REQD	-1 QTY REQD	ITEM NO.	PART OR IDENTIFYING NO.	NOMENCLATURE OR DESCRIPTION

INIT	APPROVALS	DATE	INIT	APPROVALS	DATE
				T. SAITO	'18/3/6

CONTRACT NO.	MATERIAL SUS430 t2	PART NAME CONTROL BOX
	FINISH Black Paint	TITLE PART SPECIFICATION
THIRD ANGLE PROJECTION	TREATMENT	
NEXT ASSY / USED ON	SIMILAR TO	SIZE B / CAGE CODE / DWG NO. B3-00071 / REV IR
APPLICATION		SCALE (1:1) / SHEET (1/1)