NOTES:

REVISION HISTORY

REV	DESCRIPTION	INCORP BY	DATE	CHECKED

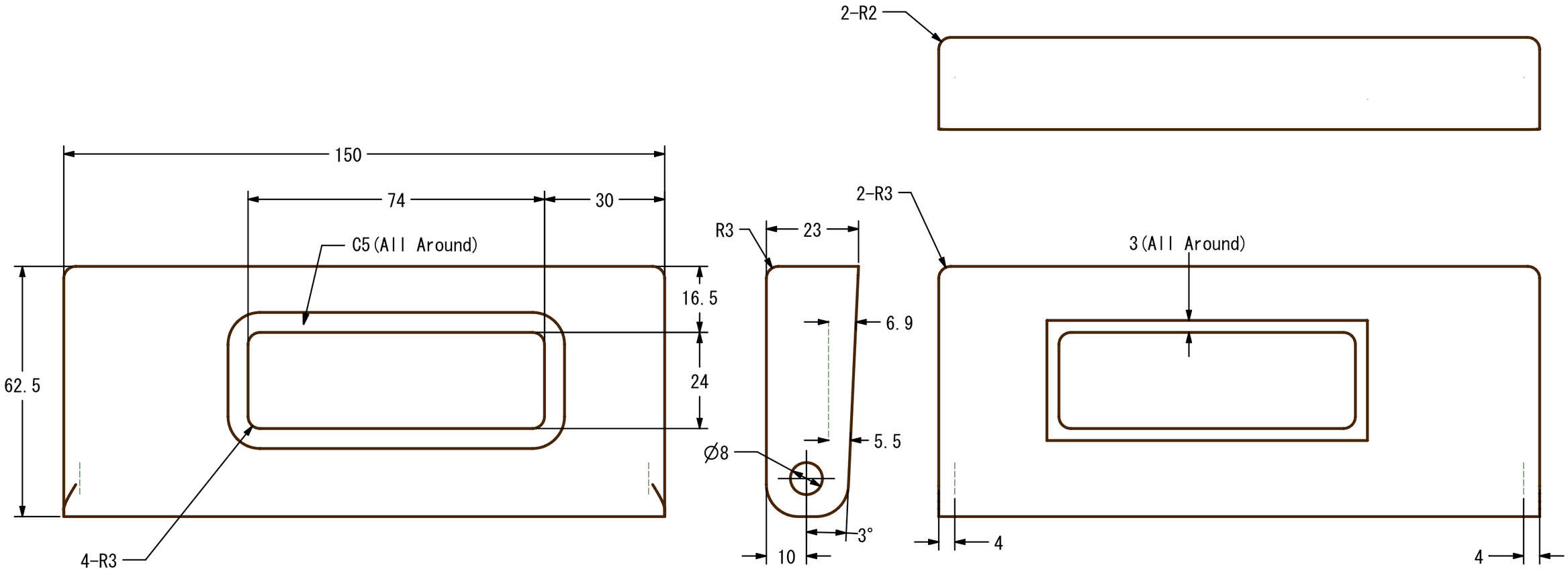

-2 QTY REQD	-1 QTY REQD	ITEM NO.	PART OR IDENTIFYING NO.	NOMENCLATURE OR DESCRIPTION

PARTS LIST

INIT	APPROVALS	DATE	INIT	APPROVALS	DATE
				T. SAITO	'18/2/1

CONTRACT NO.		MATERIAL Light Weight Fire Brick
		FINISH Dust Proof Coating
THIRD ANGLE PROJECTION		TREATMENT
NEXT ASSY	USED ON	SIMILAR TO
APPLICATION		

Part Name: REFLO Front Door

TITLE: PART SPECIFICATION

SIZE	CAGE CODE	DWG NO.	REV
B			IR

SCALE 1:1 SHEET (1/1)