NUCLEO-WB55.Nucleo

MB1355

Table of contents

Sheet 1: Project overview (this page)

Sheet 2: STM32WB55RG microcontroller I/Os

Sheet 3: STM32WB55RG RF part

Sheet 4: Arduino/Morphos extension connectors

Sheet 5: Power Management

Sheet 6: ST-Link/V2-1

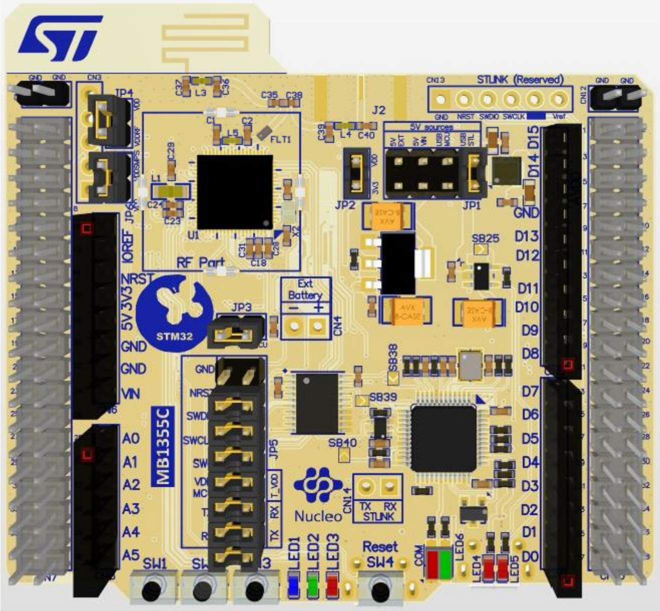

STLINK (Reserved)
RF Part
STM32
MB1355C
Ext Battery
Nucleo
IOREF
NRST
3V3
5V
GND
VIN
A0
A1
A2
A3
A4
A5
D15
D14
D13
D12
D11
D10
D9
D8
D7
D6
D5
D4
D3
D2
D1
D0
JP1
JP2
JP3
JP5
SB25
SB38
SB39
SB40
TX RX STLINK
SW1
Reset SW4
LED1
LED2
LED3
LED4
LED5
LED6

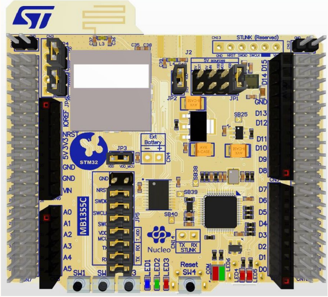

Top view

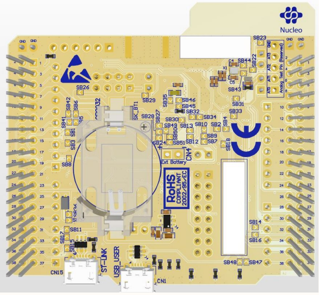

Bottom view

Legend

This Board is a NUCLEO68. It is dedicated of STM32WB55RG evaluation.
The package embedded is : VFQFPN68_8mmx8mmx0.1mm.

Manufacturing requirements :
Solder_Mask : Both Sides, Color : white
Silkscreen : Both Sides, Color : light blue or blue
PCB : 4 Layers (see Stack-up Description On Mechanical page)

Text/Logo to be added to silkscreen.

Top	Logo_ST	Logo_Nucleo	Nucleo_www	Logo_STM32	Sticker FCC_ID		
Bottom	Logo_Nucleo	Logo_ESD	Logo_CE	Logo_ROHS	Sticker Area	Sticker BrdRef	Sticker CPN_FG

Open Platform License Agreement

The Open Platform License Agreement (“Agreement”) is a binding legal contract between you ("You") and STMicroelectronics International N.V. (“ST”), a company incorporated under the laws of the Netherlands acting for the purpose of this Agreement through its Swiss branch 39, Chemin du Champ des Filles, 1228 Plan-les-Ouates, Geneva, Switzerland.

By using the enclosed reference designs, schematics, PC board layouts, and documentation, in hardcopy or CAD tool file format (collectively, the “Reference Material”), You are agreeing to be bound by the terms and conditions of this Agreement. Do not use the Reference Material until You have read and agreed to this Agreement terms and conditions. The use of the Reference Material automatically implies the acceptance of the Agreement terms and conditions.

The complete Open Platform License Agreement can be found on www.st.com/opla.

Title: **Project overview**		
Project: **NUCLEO-WB55.Nucleo**		
Variant: [No Variations]		
Revision: C-02		Reference: MB1355
Size: A4	Date: 20-Dec-2018	Sheet: 1 of 6

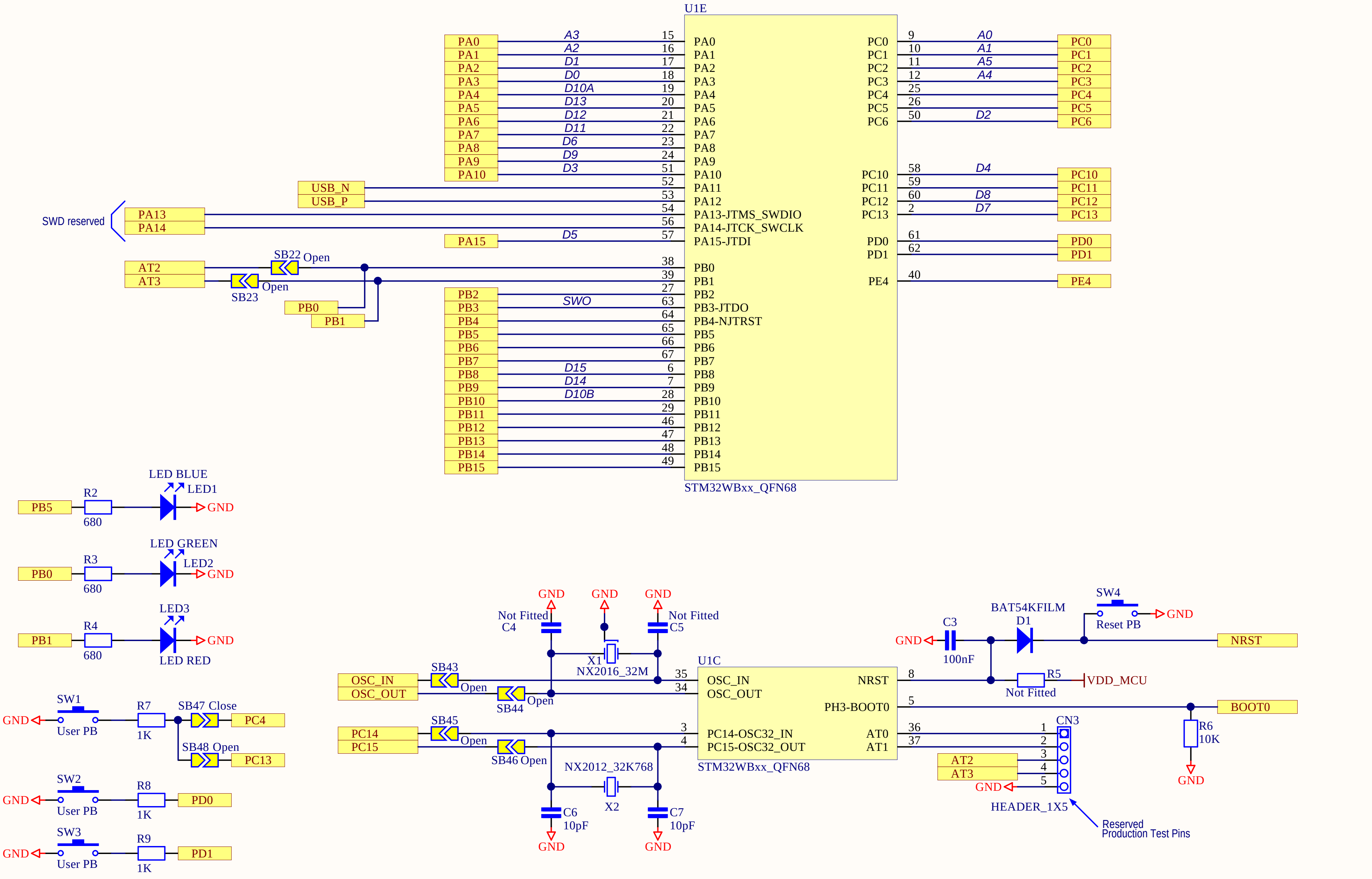
U1E
PA0 A3 15 PA0
PA1 A2 16 PA1
PA2 D1 17 PA2
PA3 D0 18 PA3
PA4 D10A 19 PA4
PA5 D13 20 PA5
PA6 D12 21 PA6
PA7 D11 22 PA7
PA8 D6 23 PA8
PA9 D9 24 PA9
PA10 D3 51 PA10
USB_N 52 PA11
USB_P 53 PA12
SWD reserved
PA13 54 PA13-JTMS_SWDIO
PA14 56 PA14-JTCK_SWCLK
PA15 D5 57 PA15-JTDI
AT2 SB22 Open 38 PB0
AT3 SB23 Open 39 PB1
PB0
PB1
PB2 27 PB2
PB3 SWO 63 PB3-JTDO
PB4 64 PB4-NJTRST
PB5 65 PB5
PB6 66 PB6
PB7 67 PB7
PB8 D15 6 PB8
PB9 D14 7 PB9
PB10 D10B 28 PB10
PB11 29 PB11
PB12 46 PB12
PB13 47 PB13
PB14 48 PB14
PB15 49 PB15
PC0 9 A0 PC0
PC1 10 A1 PC1
PC2 11 A5 PC2
PC3 12 A4 PC3
PC4 25 PC4
PC5 26 PC5
PC6 50 D2 PC6
PC10 58 D4 PC10
PC11 59 PC11
PC12 60 D8 PC12
PC13 2 D7 PC13
PD0 61 PD0
PD1 62 PD1
PE4 40 PE4
STM32WBxx_QFN68
LED BLUE
PB5 R2 680 LED1 GND
LED GREEN
PB0 R3 680 LED2 GND
LED3
PB1 R4 680 GND
LED RED
SW1 User PB GND R7 1K SB47 Close PC4
SB48 Open PC13
SW2 User PB GND R8 1K PD0
SW3 User PB GND R9 1K PD1
GND GND GND
Not Fitted C4
Not Fitted C5
X1 NX2016_32M
OSC_IN SB43 Open 35 OSC_IN
OSC_OUT SB44 Open 34 OSC_OUT
U1C
PC14 SB45 Open 3 PC14-OSC32_IN
PC15 SB46 Open 4 PC15-OSC32_OUT
NX2012_32K768
X2
C6 10pF GND
C7 10pF GND
STM32WBxx_QFN68
NRST 8
PH3-BOOT0 5
AT0 36
AT1 37
GND C3 100nF
BAT54KFILM D1
SW4 Reset PB GND
NRST
R5 Not Fitted VDD_MCU
BOOT0
R6 10K GND
CN3 1 2 3 4 5
AT2
AT3
GND
HEADER_1X5
Reserved
Production Test Pins

Title: **STM32WB55RG microcontroller I/Os**	
Project: **NUCLEO-WB55.Nucleo**	
Variant: [No Variations]	
Revision: C-02	Reference: MB1355
Size: A4 Date: 20-Dec-2018	Sheet: 2 of 6

life.augmented

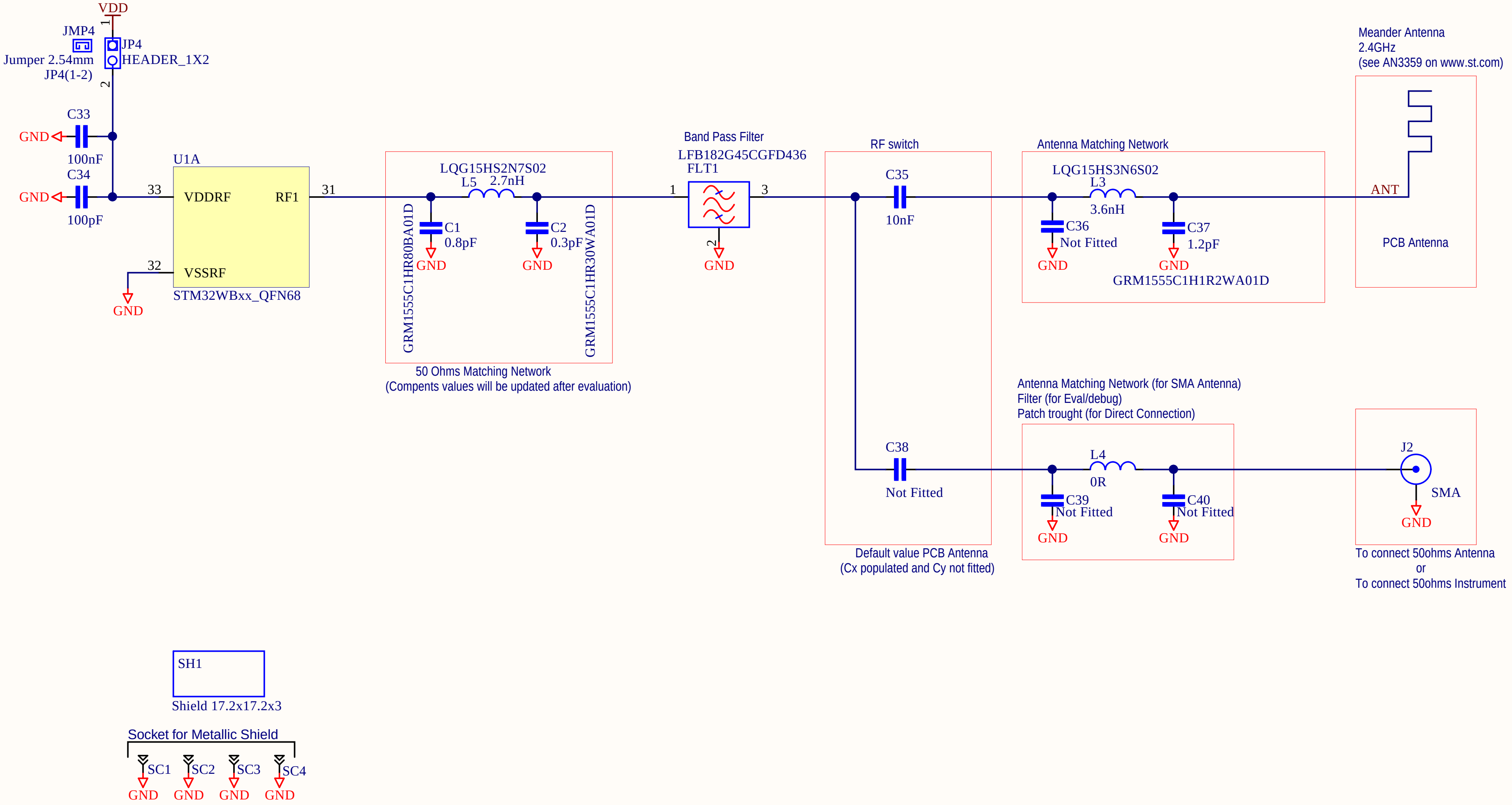
VDD
1
JMP4
JP4
Jumper 2.54mm
HEADER_1X2
JP4(1-2)
2
C33
GND
100nF
C34
GND
100pF
U1A
33
VDDRF
RF1
31
32
VSSRF
GND
STM32WBxx_QFN68
LQG15HS2N7S02
L5
2.7nH
C1
0.8pF
GND
C2
0.3pF
GND
GRM1555C1HR80BA01D
GRM1555C1HR30WA01D
50 Ohms Matching Network
(Compents values will be updated after evaluation)
Band Pass Filter
LFB182G45CGFD436
FLT1
1
3
2
GND
RF switch
C35
10nF
C38
Not Fitted
Default value PCB Antenna
(Cx populated and Cy not fitted)
Antenna Matching Network
LQG15HS3N6S02
L3
3.6nH
C36
Not Fitted
GND
C37
1.2pF
GND
GRM1555C1H1R2WA01D
Meander Antenna
2.4GHz
(see AN3359 on www.st.com)
ANT
PCB Antenna
Antenna Matching Network (for SMA Antenna)
Filter (for Eval/debug)
Patch trought (for Direct Connection)
L4
0R
C39
Not Fitted
GND
C40
Not Fitted
GND
J2
SMA
GND
To connect 50ohms Antenna
or
To connect 50ohms Instrument
SH1
Shield 17.2x17.2x3
Socket for Metallic Shield
SC1
SC2
SC3
SC4
GND
GND
GND
GND

Title: **STM32WB55RG RF part**
Project: **NUCLEO-WB55.Nucleo**
Variant: [No Variations]
Revision: C-02 Reference: MB1355
Size: A4 Date: 20-Dec-2018 Sheet: 3 of 6

life.augmented

Morpho connectors

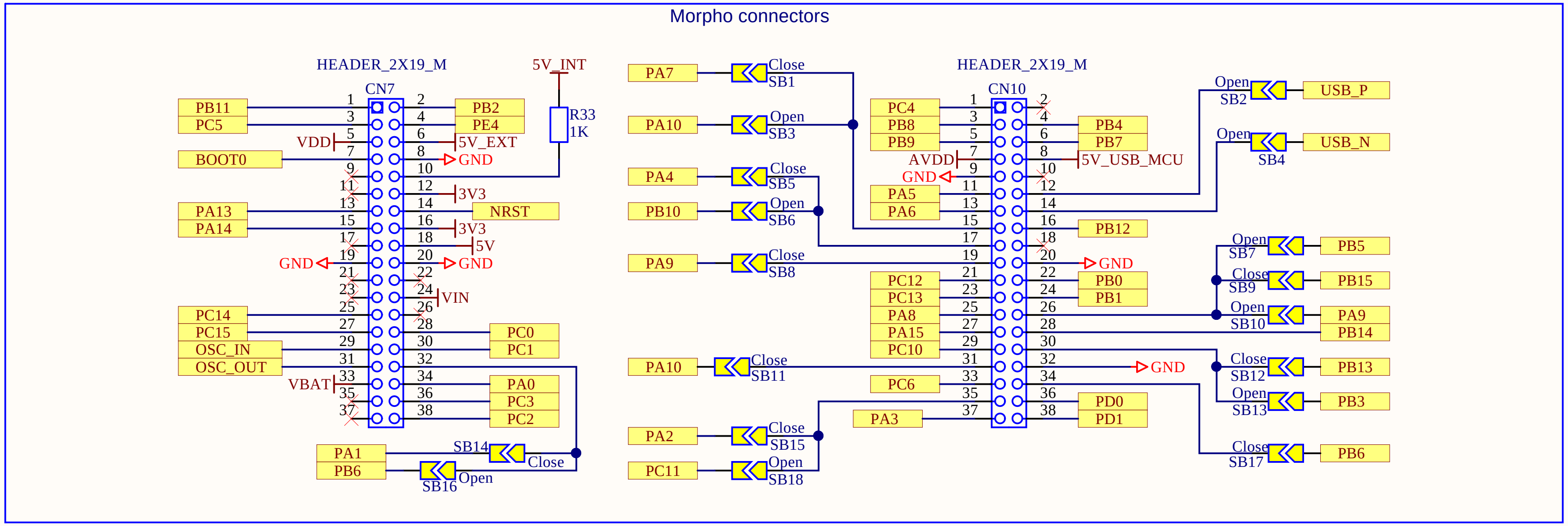
HEADER_2X19_M
CN7
PB11
PC5
VDD
BOOT0
PA13
PA14
GND
PC14
PC15
OSC_IN
OSC_OUT
VBAT
PB2
PE4
5V_EXT
GND
3V3
NRST
3V3
5V
GND
VIN
PC0
PC1
PA0
PC3
PC2
5V_INT
R33
1K
PA1
PB6
SB14
Close
SB16
Open
PA7
Close
SB1
PA10
Open
SB3
PA4
Close
SB5
PB10
Open
SB6
PA9
Close
SB8
PA10
Close
SB11
PA2
Close
SB15
PC11
Open
SB18
HEADER_2X19_M
CN10
PC4
PB8
PB9
AVDD
GND
PA5
PA6
PC12
PC13
PA8
PA15
PC10
PC6
PA3
PB4
PB7
5V_USB_MCU
PB12
GND
PB0
PB1
GND
PD0
PD1
Open
SB2
USB_P
Open
SB4
USB_N
Open
SB7
PB5
Close
SB9
PB15
Open
SB10
PA9
PB14
Close
SB12
PB13
Open
SB13
PB3
Close
SB17
PB6

STM32WB55 USB Connector

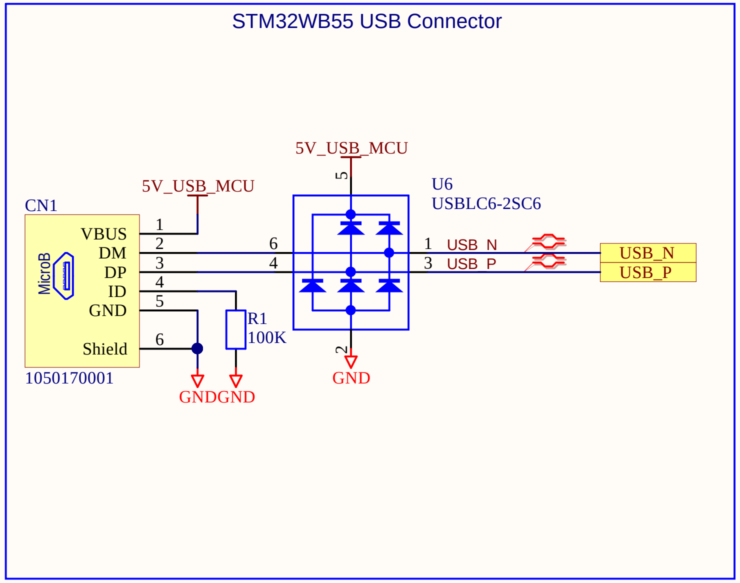
5V_USB_MCU
CN1
MicroB
VBUS
DM
DP
ID
GND
Shield
1050170001
GND
GND
R1
100K
5V_USB_MCU
U6
USBLC6-2SC6
USB_N
USB_P
GND
USB_N
USB_P

Arduino Shield Connectors

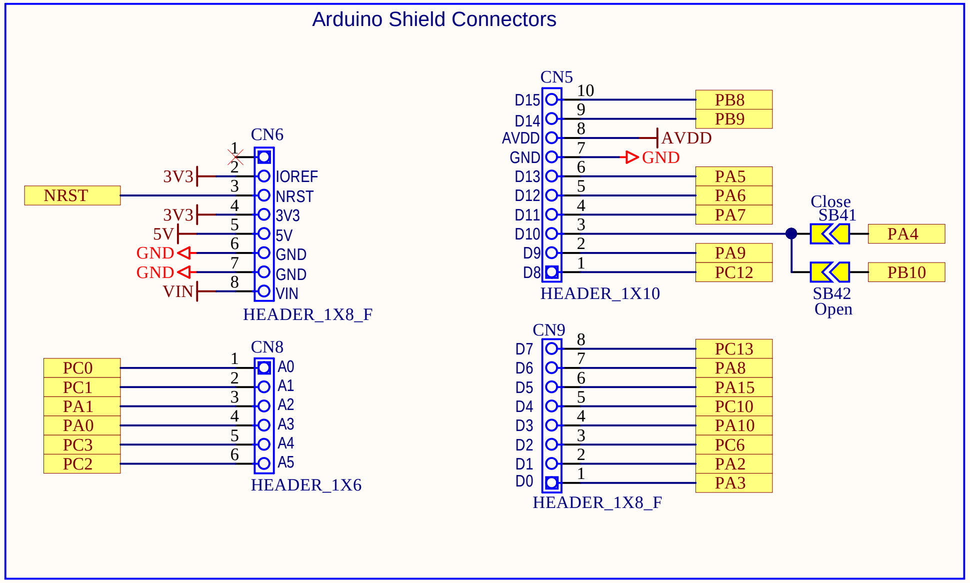
CN6
NRST
3V3
3V3
5V
GND
GND
VIN
IOREF
NRST
3V3
5V
GND
GND
VIN
HEADER_1X8_F
CN8
PC0
PC1
PA1
PA0
PC3
PC2
A0
A1
A2
A3
A4
A5
HEADER_1X6
CN5
D15
D14
AVDD
GND
D13
D12
D11
D10
D9
D8
PB8
PB9
AVDD
GND
PA5
PA6
PA7
PA9
PC12
HEADER_1X10
Close
SB41
PA4
SB42
Open
PB10
CN9
D7
D6
D5
D4
D3
D2
D1
D0
PC13
PA8
PA15
PC10
PA10
PC6
PA2
PA3
HEADER_1X8_F

Title: **Arduino/Morphos extension connectors**
Project: **NUCLEO-WB55.Nucleo**
Variant: [No Variations]
Revision: C-02
Reference: MB1355
Size: A4
Date: 20-Dec-2018
Sheet: 4 of 6

life.augmented

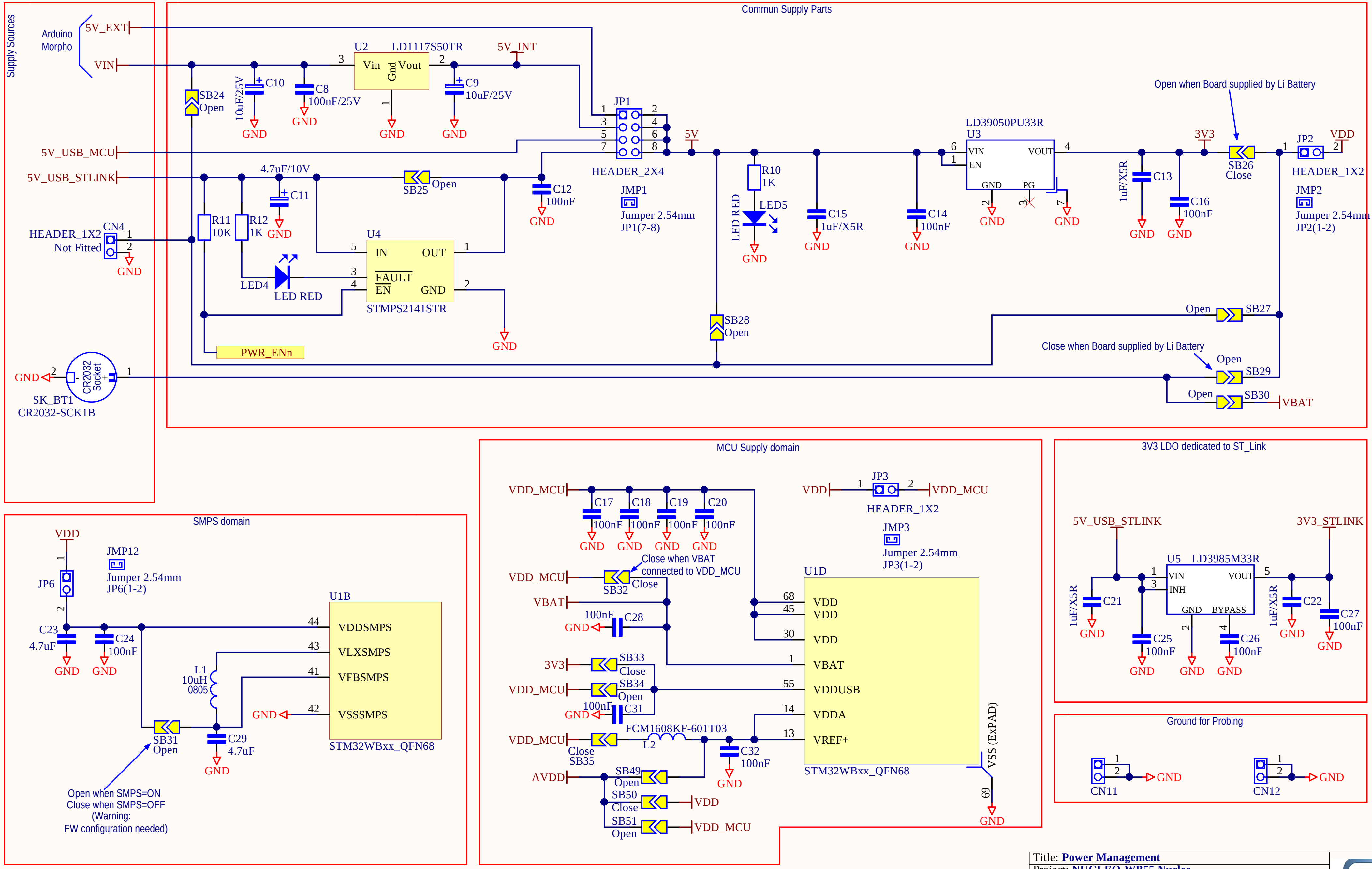
Supply Sources
Arduino
Morpho
5V_EXT
VIN
5V_USB_MCU
5V_USB_STLINK
HEADER_1X2
Not Fitted
CN4
CR2032 Socket
SK_BT1
CR2032-SCK1B
Commun Supply Parts
U2
LD1117S50TR
Vin
Gnd
Vout
5V_INT
C10
10uF/25V
C8
100nF/25V
C9
10uF/25V
SB24
Open
JP1
HEADER_2X4
JMP1
Jumper 2.54mm
JP1(7-8)
4.7uF/10V
C11
R11
10K
R12
1K
SB25
Open
C12
100nF
U4
IN
OUT
FAULT
EN
GND
STMPS2141STR
LED4
LED RED
PWR_ENn
5V
R10
1K
LED5
LED RED
C15
1uF/X5R
C14
100nF
SB28
Open
LD39050PU33R
U3
VIN
EN
VOUT
GND
PG
C13
1uF/X5R
C16
100nF
3V3
Open when Board supplied by Li Battery
SB26
Close
JP2
HEADER_1X2
VDD
JMP2
Jumper 2.54mm
JP2(1-2)
Open
SB27
Close when Board supplied by Li Battery
Open
SB29
Open
SB30
VBAT
GND
SMPS domain
VDD
JP6
JMP12
Jumper 2.54mm
JP6(1-2)
C23
4.7uF
C24
100nF
L1
10uH
0805
SB31
Open
C29
4.7uF
U1B
VDDSMPS
VLXSMPS
VFBSMPS
VSSSMPS
STM32WBxx_QFN68
Open when SMPS=ON
Close when SMPS=OFF
(Warning:
FW configuration needed)
MCU Supply domain
VDD_MCU
C17
C18
C19
C20
100nF
Close when VBAT
connected to VDD_MCU
SB32
Close
VBAT
C28
100nF
3V3
SB33
Close
SB34
Open
C31
100nF
FCM1608KF-601T03
L2
Close
SB35
C32
100nF
AVDD
SB49
Open
SB50
Close
SB51
Open
JP3
HEADER_1X2
JMP3
Jumper 2.54mm
JP3(1-2)
U1D
VDD
VDD
VDD
VBAT
VDDUSB
VDDA
VREF+
VSS (ExPAD)
STM32WBxx_QFN68
3V3 LDO dedicated to ST_Link
5V_USB_STLINK
3V3_STLINK
U5
LD3985M33R
VIN
INH
VOUT
GND
BYPASS
C21
1uF/X5R
C25
100nF
C26
100nF
C22
1uF/X5R
C27
100nF
Ground for Probing
CN11
CN12
GND

Title: **Power Management**
Project: **NUCLEO-WB55.Nucleo**
Variant: [No Variations]
Revision: C-02
Reference: MB1355
Size: A4
Date: 20-Dec-2018
Sheet: 5 of 6

life.augmented

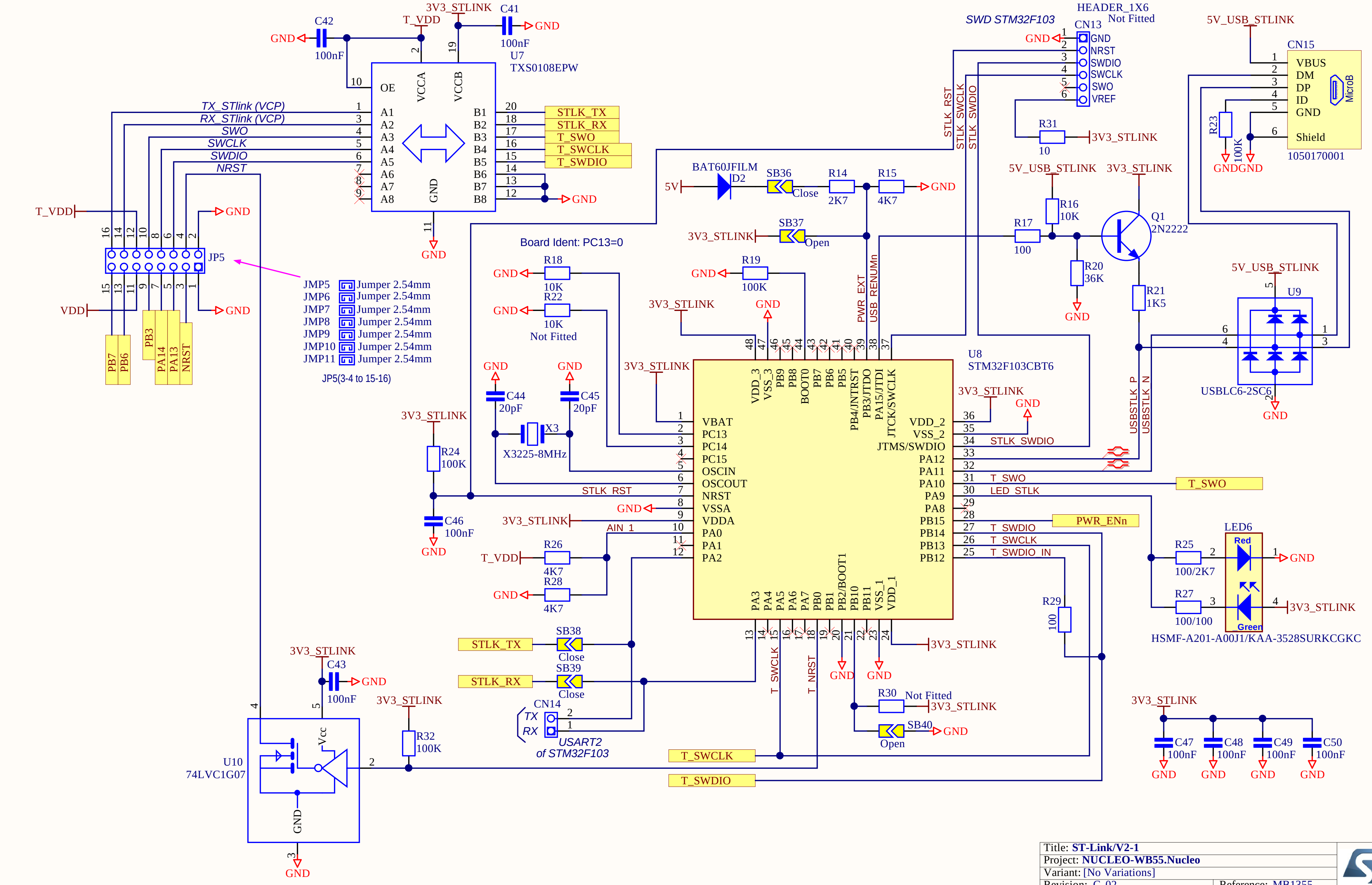
3V3_STLINK
C41
100nF
GND
T_VDD
C42
100nF
U7
TXS0108EPW
OE
VCCA
VCCB
A1
A2
A3
A4
A5
A6
A7
A8
B1
B2
B3
B4
B5
B6
B7
B8
TX_STlink (VCP)
RX_STlink (VCP)
SWO
SWCLK
SWDIO
NRST
STLK_TX
STLK_RX
T_SWO
T_SWCLK
T_SWDIO
JP5
JMP5 Jumper 2.54mm
JMP6 Jumper 2.54mm
JMP7 Jumper 2.54mm
JMP8 Jumper 2.54mm
JMP9 Jumper 2.54mm
JMP10 Jumper 2.54mm
JMP11 Jumper 2.54mm
JP5(3-4 to 15-16)
VDD
PB7
PB6
PB3
PA14
PA13
NRST
SWD STM32F103
HEADER_1X6
Not Fitted
CN13
GND
NRST
SWDIO
SWCLK
SWO
VREF
R31
10
STLK_RST
STLK_SWCLK
STLK_SWDIO
5V_USB_STLINK
CN15
VBUS
DM
DP
ID
GND
Shield
MicroB
1050170001
R23
100K
BAT60JFILM
D2
5V
SB36
Close
R14
2K7
R15
4K7
R16
10K
R17
100
Q1
2N2222
R20
36K
R21
1K5
SB37
Open
PWR_EXT
USB_RENUMn
U9
USBLC6-2SC6
Board Ident: PC13=0
R18
10K
R22
10K
Not Fitted
R19
100K
C44
20pF
C45
20pF
X3
X3225-8MHz
U8
STM32F103CBT6
VBAT
PC13
PC14
PC15
OSCIN
OSCOUT
NRST
VSSA
VDDA
PA0
PA1
PA2
VDD_3
VSS_3
PB9
PB8
BOOT0
PB7
PB6
PB5
PB4/JNTRST
PB3/JTDO
PA15/JTDI
JTCK/SWCLK
VDD_2
VSS_2
JTMS/SWDIO
PA12
PA11
PA10
PA9
PA8
PB15
PB14
PB13
PB12
PA3
PA4
PA5
PA6
PA7
PB0
PB1
PB2/BOOT1
PB10
PB11
VSS_1
VDD_1
USBSTLK_P
USBSTLK_N
T_SWO
LED_STLK
PWR_ENn
T_SWDIO
T_SWCLK
T_SWDIO_IN
AIN_1
R24
100K
C46
100nF
R26
4K7
R28
4K7
R25
100/2K7
R27
100/100
LED6
Red
Green
HSMF-A201-A00J1/KAA-3528SURKCGKC
R29
100
SB38
Close
SB39
Close
CN14
TX
RX
USART2
of STM32F103
R30
Not Fitted
SB40
Open
T_SWCLK
T_NRST
C43
100nF
U10
74LVC1G07
Vcc
R32
100K
C47
100nF
C48
100nF
C49
100nF
C50
100nF

Title: **ST-Link/V2-1**	
Project: **NUCLEO-WB55.Nucleo**	
Variant: [No Variations]	
Revision: C-02	Reference: MB1355
Size: A4 Date: 20-Dec-2018	Sheet: 6 of 6