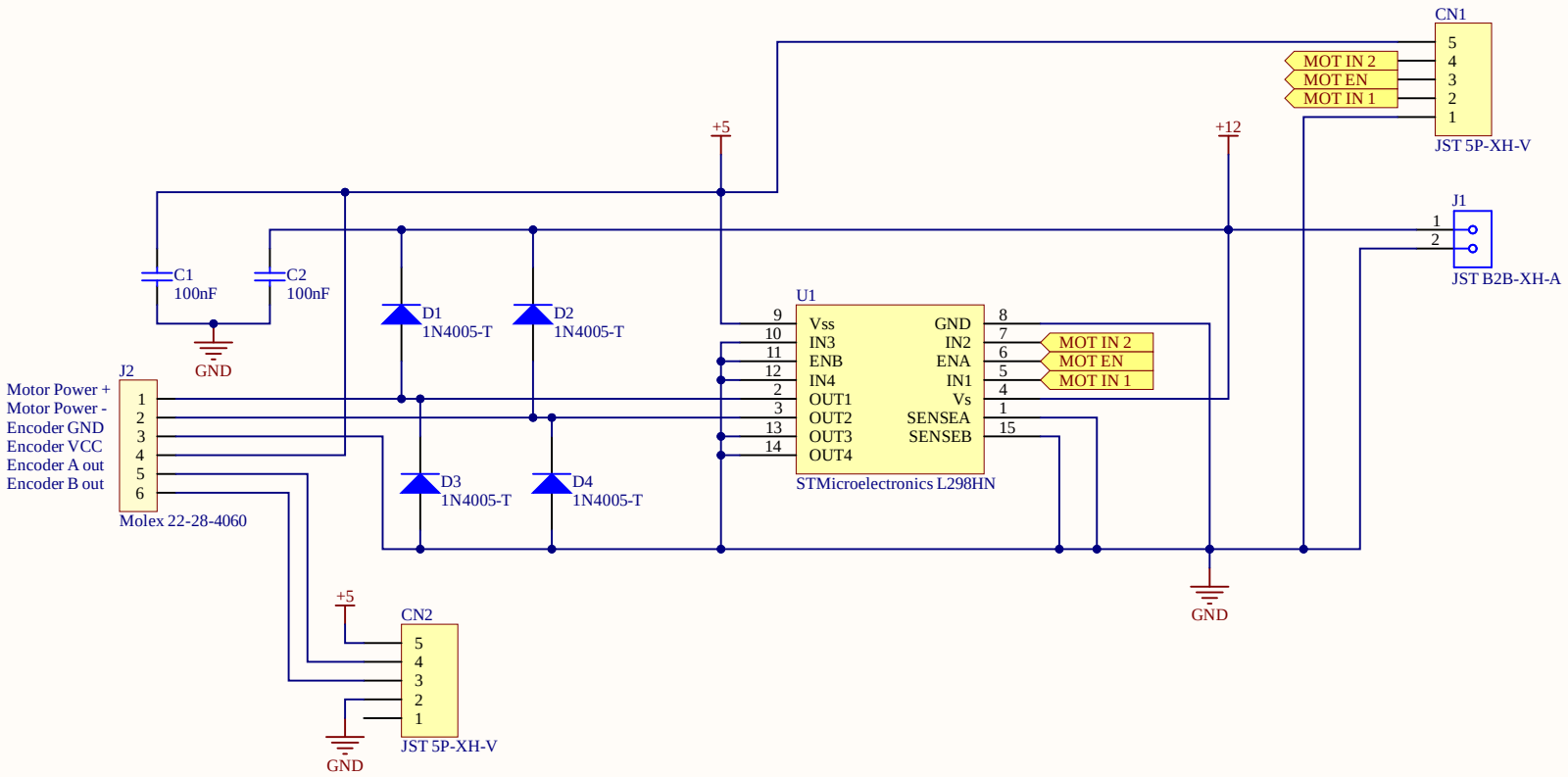


| | | |
|---|---|---|
| Title | | |
| Size A | Number | Revision |
| Date: 3/19/2023 | | Sheet of |
| File: DriverCCT.SchDoc | | Drawn By: |