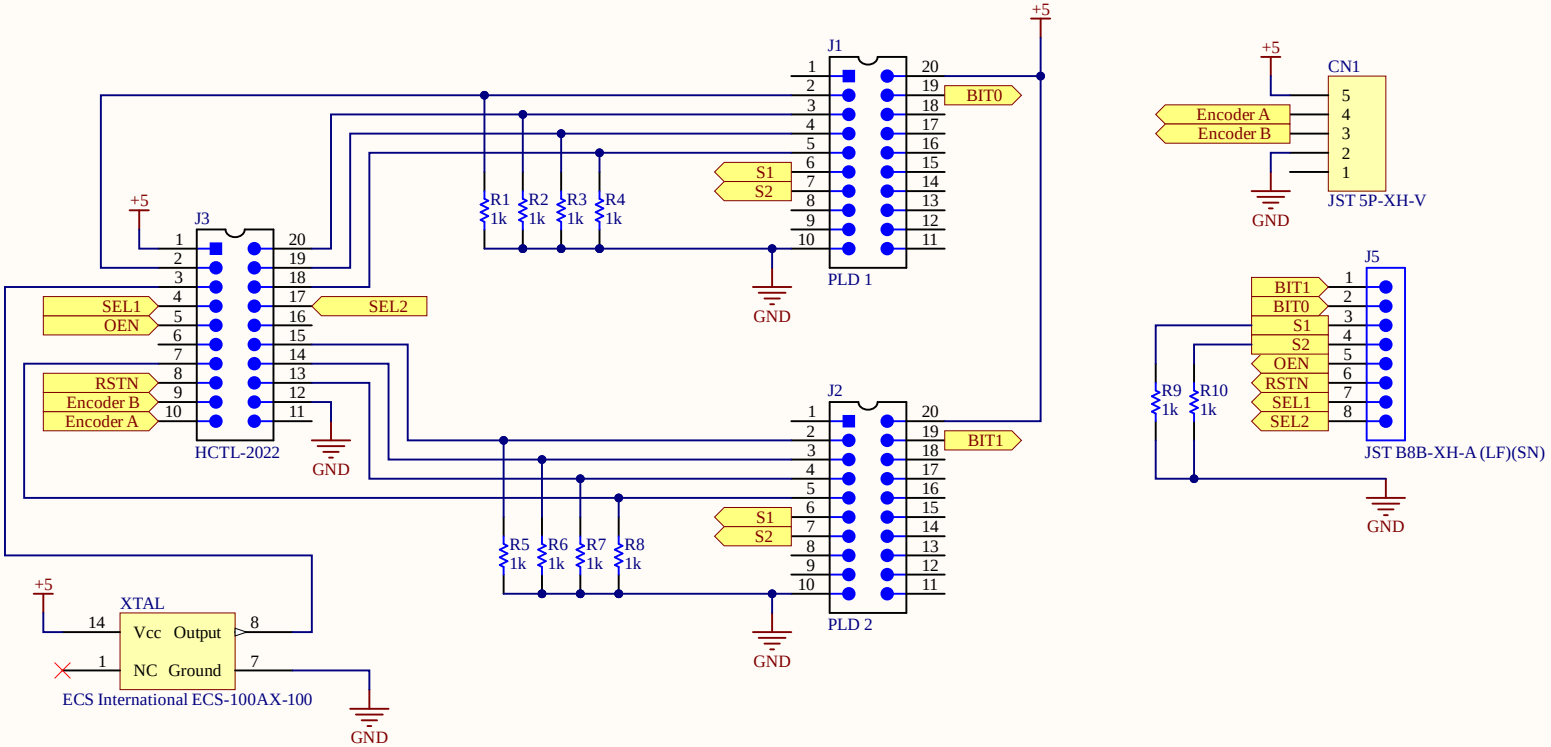

Title		
Size A	Number	Revision
Date: 3/27/2023		Sheet of
File: pulseCounter.SchDoc		Drawn By: