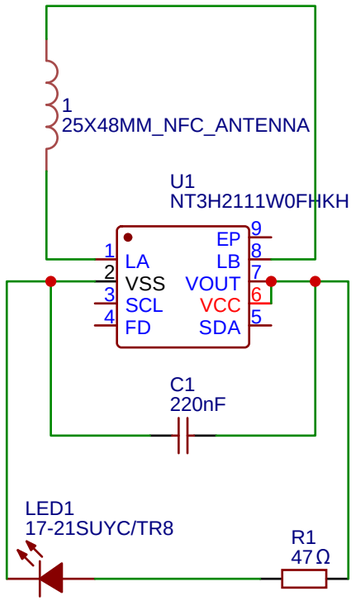

TITLE: NFC Card		REV: 1.0
EasyEDA	Company: Your Company	Sheet: 1/1
	Date: 2024-08-02 Drawn By: yashsethu	