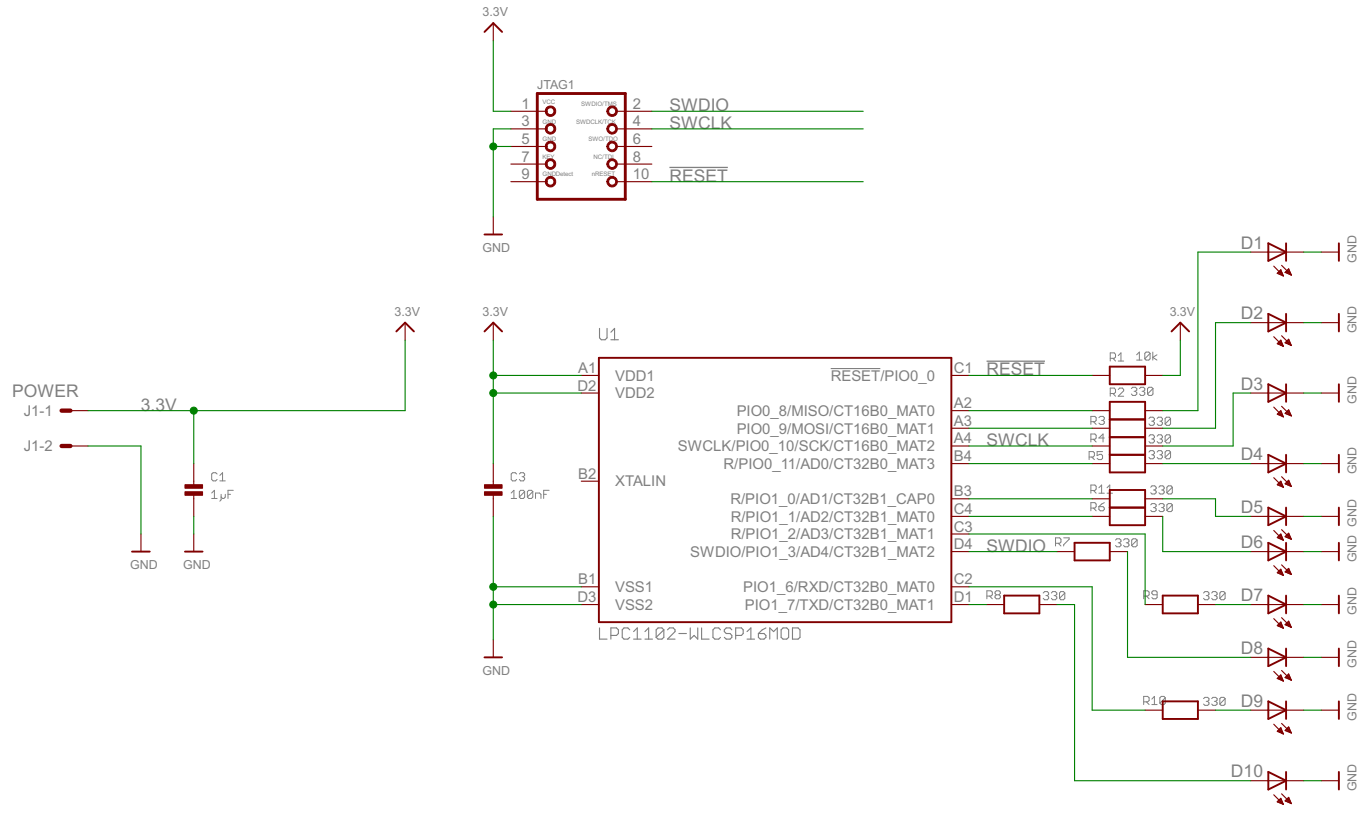

TITLE: lpc1102_revb	
Document Number:	REV:
Date: 4/21/2016 1:53:10 PM	Sheet: 1/1