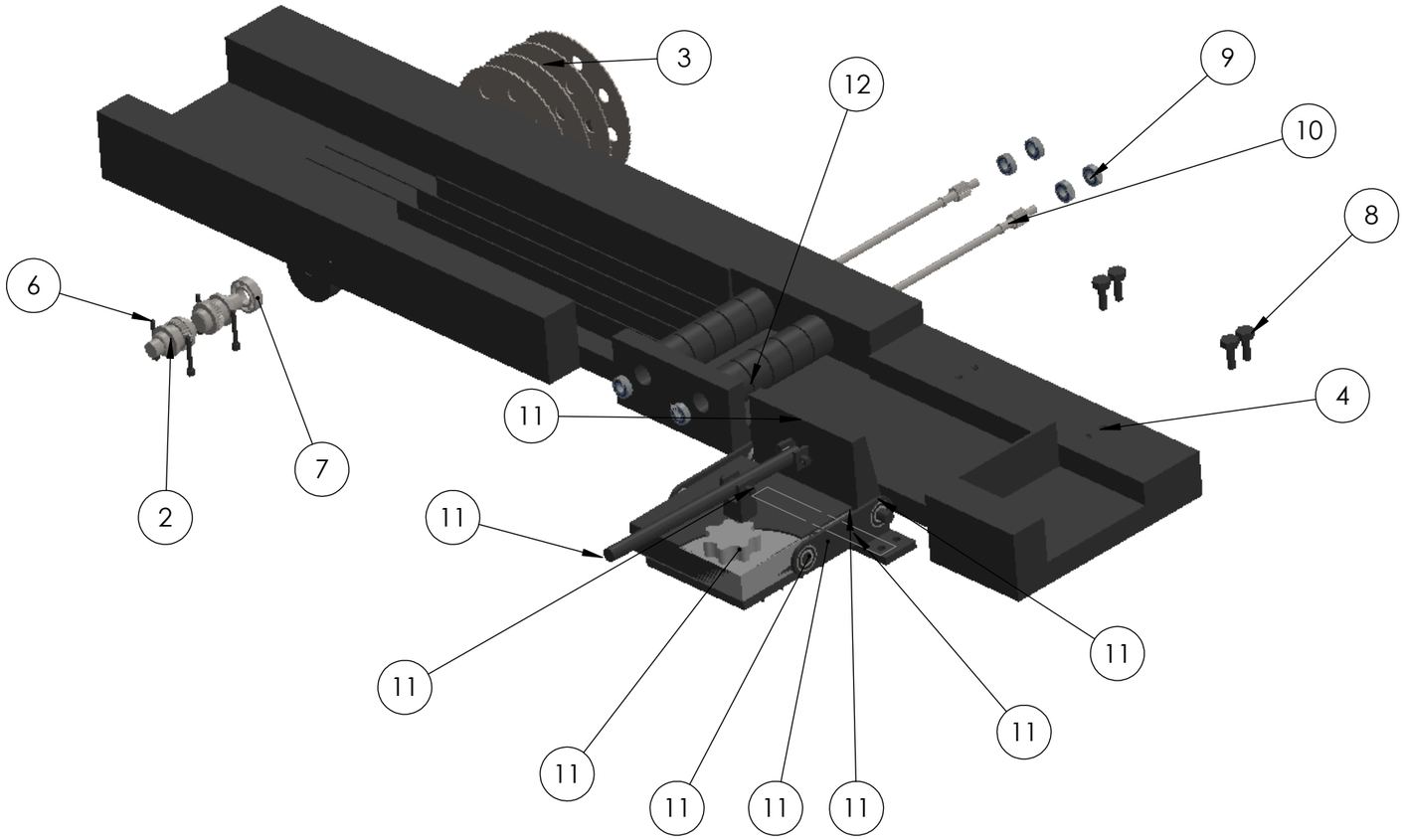

ITEM NO.	PART NUMBER	DESCRIPTION	QTY.
1	blade nut	Ductile Iron	4
2	Shaft	Cast Stainless Steel	2
3	blade	Alloy Steel	4
4	plate	Ductile Iron	1
5	Cover Cap	Ductile Iron	2
6	Bolt	Ductile Iron	4
7	BallBearing	Cast Alloy Steel	2
8	Holder Bolt	Ductile Iron	4
9	10mm Bearing	Cast Alloy Steel	6
10	Grinding shaft	Cast Stainless Steel	2
11	Stamp Assem		1
12	Roller grinder	Malleable cast Iron	2

UNLESS OTHERWISE SPECIFIED:
DIMENSIONS ARE IN MILLIMETERS
SURFACE FINISH:
TOLERANCES:
LINEAR:
ANGULAR:

FINISH:

DEBURR AND BREAK SHARP EDGES

DO NOT SCALE DRAWING

REVISION

	NAME	SIGNATURE	DATE
DRAWN			
CHK'D			
APPV'D			
MFG			
Q.A			

TITLE:

MATERIAL:

WEIGHT:

DWG NO. Blade Assem

A3

SCALE:1:20

SHEET 1 OF 1

SOLIDWORKS Educational Product. For Instructional Use Only.