Circuits and Systems Lab

(EEC-253/EEC-254)

B.Tech. Programme
(IT)

LAB MANUAL

Maharaja Surajmal Institute of Technology
(NAAC and NBA Accredited)
Affiliated to GGSIP University
C-4, Janak Puri, New Delhi - 110058

CONTENTS

1. **Vision, Mission, PEO and PSO Statements**

2. **Program Outcome**

3. **CO-PO Mapping**

4. **Introduction**

5. **Hardware and Software requirements**

6. **List of Experiments**

7. **Experiment-Course Outcome Matrix**

8. **Marking scheme for the Practical lab Examination**

9. **Detail of Experiments**

10. **Expected Viva Voce Questions**

11. **References**

Department of Information Technology

1. Vision, Mission, PEOs and PSOs

Vision of the Institute

To become one of the most admired centers of academics excellence in the field of Engineering & Technology for all-round professional development of students to enable them to meet the growing technological needs of the country.

Mission of the Institute

Developing new paradigm in imparting education in the fields of Engineering and Technology and to imbibe national values leading to student's empowerment, with a view to prepare them to meet the national and global challenges.

Vision of Department

To build a culture of innovation and research in students and make them capable to solve upcoming challenges of human life using computing.

Mission of Department

M1. To develop 'educational pathways' so that students can take their career towards success.

M2. To imbibe curiosity and support innovativeness by providing guidance to use the technology effectively.

M3. To inculcate management skills, integrity, honesty and human values through curricular, co-curricular and extra-curricular activities.

Program Educational Objectives

PEO1. Graduates of IT program are prepared to be employed by IT industries and be engaged in learning, understanding and applying new ideas.

PEO2. The graduates are prepared to perform effectively as individuals and team members in the workplace, growing into highly technical or project management and leadership roles.

PEO3. Graduates are prepared to apply basic principles of practices of computing grounded in mathematics and science for successfully completing software related projects to satisfy customer business objectives and productively engage in research.

PEO4. Graduates are prepared to pursue higher studies so that they can contribute to the teaching profession, research & development of information technology and other allied fields.

Program Specific Outcomes

PSO 1: Ability to understand the principles and working of hardware and software aspects in information technology.

PSO 2: Ability to explore and develop innovative ideas to solve real world problem using IT skills.

2. PROGRAM OUTCOME (POs)

PO1. Engineering Knowledge : Apply the knowledge of mathematics, science,engineering fundamentals, and an engineering specialization to the solution of complex engineering problems.

PO2. Problem Analysis: Identify, formulate, review research literature, and analyze complex engineering problems reaching substantiated conclusions using first principles of mathematics, natural sciences, and engineering sciences.

PO3. Design/development of solutions: Design solutions for complex engineering problems and design system components or processes that meet the specified needs with appropriate consideration for the public health and safety, and the cultural, societal, and environmental considerations.

PO4. Conduct investigations of complex problems: Use research-based knowledge and research methods including design of experiments, analysis and interpretation of data, and synthesis of the information to provide valid conclusions.

PO5. Modern tool usage: Create, select, and apply appropriate techniques, resources, and modern engineering and IT tools including prediction and modeling to complex engineering activities with an understanding of the limitations.

PO6. The engineer and society: Apply reasoning informed by the contextual knowledge to assess societal, health, safety, legal and cultural issues and the consequent responsibilities relevant to the professional engineering practice.

PO7. Environment and sustainability: Understand the impact of the professional engineering solutions in societal and environmental contexts, and demonstrate the knowledge of, and need for sustainable development.

PO8. Ethics: Apply ethical principles and commit to professional ethics and responsibilities and norms of the engineering practice.

PO9. Individual and team work: Function effectively as an individual, and as a member or leader in diverse teams, and in multidisciplinary settings.

PO10. Communication: Communicate effectively on complex engineering activities with the engineering community and with society at large, such as, being able to comprehend and write effective reports and design documentation, make effective presentations, and give and receive clear instructions.

PO11. Project management and finance: Demonstrate knowledge and understanding of the engineering and management principles and apply these to one's own work, as a member and leader in a team, to manage projects and in multidisciplinary environments.

PO12. Life-long learning: Recognize the need for, and have the preparation and ability to engage in independent and life-long learning in the broadest context of technological change.

3. CO-PO Mapping

Maharaja Surajmal Institute Of Technology
C-4, JANAKPURI, NEW DELHI

Department of Information Technology
Outcome Based Education
Course Outcome

Subject:	Circuits and Systems	Term end Theory Examinations	60 Marks
Subject Code:	EEC-254	Teachers Continuous Evaluation	40 marks
Total Credit:	1	**Evaluation Scheme**	
Contact Hours:	P-2	Evaluation 60 Marks	End-term Exam
		Evaluation 40 Marks	Lab Assessment Criteria's (LAC)

Course Outcome:
At the end of the course, a student will be able to:

C254.1: Understand and implement basics of MATLAB and plot various types of signals in MATLAB.
C254.2: Evaluate all the parameters of the given two port network.
C254.3: Determine the parameters of an interconnected two port network.
C254.4: Design two port network using MATLAB/SIMULINK.

CO-PO Mapping

	PO1	PO2	PO3	PO4	PO5	PO6	PO7	PO8	PO9	PO10	PO11	PO12	PSO1	PSO2
C254.1	3	3	3	2	2	-	-	-	-	-	-	1	3	3
C254.2	3	3	2	-	-	-	-	-	-	-	-	1	3	3
C254.3	3	2	1	-	-	-	-	-	-	-	-	1	2	3
C254.4	3	1	2	1	1	-	-	-	-	-	-	1	2	2
C254	3	2.25	2	0.5	0.5	-	-	-	-	-	-	1	2.5	2.75

(Dr. Preeti Sehrawat)
Course coordinator:

(Mr. Parveen Kumar)
Module Coordinator:

Approval Committee:

4. Introduction

Introduction to Circuits & Systems

Circuit and system theory forms the foundation of electrical and electronics engineering. It focuses on analyzing and designing electrical circuits and systems to perform specific functions, ranging from signal processing to power delivery. This theory serves as the backbone of technologies such as telecommunications, robotics, and embedded systems, connecting theoretical principles to real-world applications.

Circuit

Circuits refer to a network of electrical components interconnected by conductive paths to achieve a desired function. These components include resistors, capacitors, inductors, diodes, and transistors. Two fundamental laws govern the behavior of electrical circuits:

- **Ohm's Law**: V=IRV = IRV=IR, which relates voltage, current, and resistance.
- **Kirchhoff's Laws**:
    - Kirchhoff's Current Law (KCL): The total current entering a junction equals the total current leaving it.
    - Kirchhoff's Voltage Law (KVL): The sum of all voltages in a closed loop equals zero.

Circuit analysis determines the behavior of electrical circuits under various conditions. Key methods include:

- **Nodal Analysis**: Uses KCL to calculate voltages at various nodes.
- **Mesh Analysis**: Employs KVL to compute currents in circuit loops.
- **Thevenin's and Norton's Theorems**: Simplify complex circuits into equivalent single-source models for easier analysis.
- **Superposition Theorem**: Analyzes circuits with multiple independent sources by considering one source at a time.

System

System theory extends the concept of circuits to a broader domain, analyzing the behavior of interconnected components or systems. It is widely used in fields like control engineering, communication systems, and signal processing.

A system is a collection of elements working together to produce a defined output when subjected to an input. For instance:

- An electrical amplifier is a system that amplifies a weak input signal.
- A control system regulates the temperature of an air conditioner.

Signals represent the input and output of systems. Understanding signals is crucial in system theory. A signal is a function that is used to describe an observed physical variable of a physical process; it is an abstract mathematical description of the observation. Hence, a signal provides the most basic connecting link between the physical process, in which we are ultimately interested, and the mathematical analysis techniques developed in this text. Everything grows from a signal.

- **Types of Signals**: Continuous, discrete, periodic, and aperiodic.
- **Frequency Domain Analysis**: Signals can be analyzed using Fourier transform to understand their spectral components.
- **Laplace Transform**: Helps analyze circuits and systems in the s-domain, making it easier to handle differential equations.

Network Theorems and Analysis

To understand circuit behavior comprehensively, network theorems and advanced analysis techniques are employed:

- **Impedance and Admittance**: Represent the opposition to current in AC circuits.
- **Two-Port Networks**: Analyze systems with an input port and output port using parameters like Z, Y, and h-parameters.
- **Transfer Functions**: Represent the relationship between input and output in the frequency domain.

The students, lab assistant, and faculty coordinator all have certain responsibilities towards successful completion of the lab's goals and objectives.

Students' Responsibilities:

The students are expected to be read the lab experiment and related textbook materials before coming to Lab. Active participation by each student in lab is expected. **They are advised not to make unnecessary R & D without permission of the faculty or lab assistant for the safety of lab**. Understanding the concepts and procedure of each lab is necessary for successful completion of the lab. They must keep a professional and accurate record of the lab experiments in a laboratory notebook. **Students should report any errors in the lab manual to the Lab assistant.**

Laboratory Assistants' Responsibilities:

Laboratory Assistant (LA) needs to be completely familiar with all the experiments related to the lab. LA shall provide the students with a safety review during the first class. LA is responsible for the availability of all the necessary equipment required in the lab and ensures that all are in working condition. LA should be ready to answer any questions posed by the students. They should supervise the student's performance during the lab, assist the concerned faculty and help the students in conducting the experiments. LA should report any errors in the lab to the Lab in-charge / Faculty coordinator.

Faculty Coordinator & Lab In-charge's Responsibilities:

Lab In-charge should ensure that the laboratory is properly equipped before the starting of the semester. The Lab In-charge is responsible for ensuring that the necessary Hardware/Software equipment's are continually updated and available. The faculty co-ordinator is responsible for resolving any questions or problems that are identified by the Lab assistants or the students. The faculty coordinator is responsible for the proper conduct of experiments during the semester, grading the students as per their performance and conducts the practical exams at the end of the semester.

Do's & Don'ts in the Lab

1. Review the lab manual and experiment objectives before starting.
2. Inspect wires, resistors, and other components for damage before use.
3. Assemble the circuit exactly as specified in the schematic.
4. Ensure all connections are secure and correct before powering on the circuit.
5. Note all readings and observations in your lab notebook with proper units.
6. Cross-check results with theoretical values to ensure accuracy.
7. Approach your instructor or lab assistant if you are unsure about a procedure.
8. If components heat up or emit smoke, disconnect the power immediately.
9. Turn off all instruments after use.
10. Remove connections gently to avoid damaging components.
11. No foodstuffs are allowed in the Lab.
12. Always SHUT DOWN the computer systems or return the HARDWARE kit before leaving the Lab.
13. Arrange the chairs while leaving the lab.

5. Hardware and Software requirements

Software Requirements:

- Matlab

Operating System:

- Windows 10.

Hardware Requirements:

- Processor: Intel Core i3 or higher
- RAM: Minimum 8 GB
- Storage: 256 GB HDD or SSD
- Electronic Circuit Trainer Kit
- Digital Multimeter
- Series RLC circuit
- Parallel RLC circuit
- Function Generator

Circuits and System (EEC-253 & EEC-254)

List of Equipments

S.No.	Name of Equipments	Quantity
1.	Electronic Circuit Trainer Kit	07
2.	Dell Precision 3660 workstation, Intel Core i7-13700 Processor, Intel Q 670 Chipset Motherboard, 32 GB DDR5 RAM, 1 TB PCLe NVMe M.2 SSD, Nvidia Quadro 8 GB T1000 Graphic Card, Integrated Gigabit LAN/Dual Band Wifi+Blth, keyboard and Mouse, 23.8”{ FHD Led Monitor/Ubuntu	03
3	Dell intel® Core ™ i7-14700 14th generation 2.10 ghz 16.0 GB DDR5 RAM,500 HDD,19.5” LED Screen with dell Mouse and Keyboard with APC UPS 600VA	03
4	ACER ,P-V Core i5 processor, 2nd generation,3.0 GHz, 4GB DDR3 RAM,500 GB HDD, DVD R/W, Keyboard, Optical Mouse, TFT 18.5 Color Monitor, UPS, APC 600 VA	03
5.	Digital Multimeter	04
5.	Kits to study transient response of series RLC circuit with digital meter	01
6.	Kits to study transient response of parallel RLC circuit with digital meter	01
7.	Function gen, 1Mhz required for transient response	01
8.	DC power Supply	01

Circuits and System Lab (EEC-253/ EEC-254)

	L	T/P	C
Paper Code: EEC-254			
Paper: Circuits and Systems Lab	0	2	1

S.No.	Name of the Experiment
1	Introduction to MATLAB and its basic commands.
2	Plot unit step, unit impulse, unit ramp, exponential, parabolic functions and sinusoidal signals
3	Plot the linear convolution of two sequences
4	To verify Z-Parameters by using MATLAB software.
5	To verify the reciprocity theorem by using MATLAB software.
6	To determine Z and Y parameters of the given two port network.
7	To determine ABCD parameters of the given two port network.
8	To verify various theorems in AC Circuits.
9	To determine Hybrid parameters of the given two port network.
10	To design Cascade Connection and determine ABCD parameters of the given two port network.
11	To design Series-Series Connection and determine Z parameters of the given two port network.
12	To design Parallel-Parallel Connection and determine Y parameters of the given two port network.
13	To design Series-Parallel Connection and determine h parameters of the given two port network.
14	Study the transient response of series RLC circuit for different types of waveforms on CRO and verify using MATLAB
15	Study the time response of a simulated linear system and verify the unit step and square wave response of first order and second order, type 0,1 system

7. Experiment-Course Outcome Matrix

Sr. No	Title of the Experiment	CO1	CO2	CO3	CO4
1	Introduction to MATLAB and its basic commands.	√			
2	Plot unit step, unit impulse, unit ramp, exponential, parabolic functions and sinusoidal signals	√			
3	Plot the linear convolution of two sequences	√			
4	To verify Z-Parameters by using MATLAB software.				√
5	To verify the reciprocity theorem by using MATLAB software.				√
6	To determine Z and Y parameters of the given two port network.		√		
7	To determine ABCD parameters of the given two port network.		√		
8	To verify various theorems in AC Circuits.		√		
9	To determine Hybrid parameters of the given two port network.		√		
10	To design Cascade Connection and determine ABCD parameters of the given two port network.			√	
11	To design Series-Series Connection and determine Z parameters of the given two port network.			√	
12	To design Parallel-Parallel Connection and determine Y parameters of the given two port network.			√	
13	To design Series-Parallel Connection and determine h parameters of the given two port network.			√	

14	Study the transient response of series RLC circuit for different types of waveforms on CRO and verify using MATLAB		√		√
15	Study the time response of a simulated linear system and verify the unit step and square wave response of first order and second order, type 0,1 system		√		√

8. Marking Scheme for the Practical Lab Exam

There will be two practical exams in each semester.

- **Internal Practical Exam**
- **External Practical Exam**

Internal Practical Exam

It is taken by the concerned Faculty member of the batch.

Marking Scheme:

Total Marks: 40

Division of 40 marks is as follows:

- Punctuality/Attendance 10
- File (Organization and File checking status) 10
- Viva Voce 20

NOTE: In every lab, marks are awarded to the student out of 40 for each experiment performed in the lab and at the end the average marks are given out of 40.

External Practical Exam

It is taken by the concerned faculty member of the batch and by an external examiner. In this exam student needs to perform the experiment allotted at the time of the examination, a sheet will be given to the student in which some details asked by the examiner needs to be written and at last viva will be taken by the external examiner.

Marking Scheme:

Total Marks: 60

Division of 60 marks is as follows:

a. Evaluation of the answer sheet 20
b. Viva Voce 15
c. Experiment performance 15
d. File submitted 10

NOTE

- Internal marks + External marks = Total marks given to the students
  (40 marks) (60 marks) (100 marks)
- Experiments given to perform can be from any section of the lab.

9. Detail of Experiments

Experiment No. 1

Aim: Introduction to MATLAB and its basic commands.

1. Brief Introduction to Matlab

MATLAB, short for Matrix Laboratory, is a high-performance programming language and environment designed for technical computing. Developed by MathWorks, MATLAB provides a powerful platform for tasks like matrix computations, algorithm development, data analysis, visualization, and numerical simulations. It is widely used in academia, research, and industry for engineering, scientific, and mathematical applications.

Starting Matlab: Open the Matlab command window by double clicking on the Matlab icon.
This text-based interface will be the way you will control most of Matlab's functionality.

Matlab as a calculator: You can use the Matlab command window as a calculator, with basic operations +, -, *, / and ^ representing addition, subtraction, multiplication, division and exponentiation (raising a number to a given exponent), respectively. For example, type 4 +6 + 2 and press <Return>. Observe that you can edit previous commands by using the up and down keys.

Matlab as a programming environment: You can also save the values of the variables as you go. For example, type a=2; b=6; c=2; d=a+b+c; to see your answer, type d and press <Return>.

Note that variable names are case sensitive, can contain up to 31 characters, must start with a letter and cannot contain punctuation. Note also that commands which are terminated by a semicolon will not produce any displayed output in the command window, whereas commands which are not terminated by a semicolon will display the results in the command window.

Online help: Matlab has an extensive on-line reference. To view information about a given command, type help <command name>. To do a keyword search, type look for <keyword>. Most commands have rather intuitive names, as we will see below.

Mathematical functions: Most standard mathematical functions have standard names. For example, type help <command name> for the following commands: cos, sin, atan, exp, log, sqrt, abs, angle, conj, real, imag. Note that most of these functions can be applied directly to vectors, as well as to scalars.

Constructing vectors and matrices: Vectors and matrices are most conveniently formed in a row-wise fashion, with brackets delimiting the matrix construction commands, commas separating the elements of the row, and semicolons separating the rows. For example, type [1,2,3;4,5,6;7,8,9] and press <Return>.

Special vectors and matrices: Matlab provides some convenient routines for producing vectors and matrices with special structure. To discover some of these, consult the help for colon, punct, linspace, logspace, zeros and ones.

Indexing of elements of vectors and matrices: The first element of a vector is indexed by 1, and the top left corner of a matrix is indexed by (1,1). For example, type A=[1,2,3;4,5,6;7,8,9] and press <Return>. Then type A (1, 1) and press <Return>. Repeat for A(1,2), A(2,1) and A(3,3).

Displaying and listening to results: Matlab has some convenient routines for displaying results. Consult the help on plot, subplot, axis and hold. You may also want to listen to some of the waveforms you generate. Type help sound or help soundsc for information on how to do this.

Flow control: Matlab has many of the flow control functions of standard programming languages, such as C. Type help for, help while, and help if for information on for loops, while loops and conditional execution statements, respectively.

Aborting execution: A command can be aborted by typing <CTRL-c>. That is, by holding down the <CTRL> key and pressing c.

Clearing variables: You can clear the current list of saved variables using the clear command.

Matlab Script and Function Files

For simple problems, it often suffices to use Matlab like a calculator, but for more complicated problems it would be more convenient to store the sequence of instructions in a (text) file, and simply type the name of that file. This is exactly what the Matlab script and function files allow you to do. (Matlab is an interpretive environment, so these commands are interpreted command-by-command each time you invoke the file. There is no need for external compilation and linking as in compiler-based languages, such as C.)

The Matlab script and function files are text files and should be saved with a `.m' extension.

For this reason they are often called m-files. You can use your favorite text editor to write these files, but on a Windows machine the simplest thing to do is to choose New from the File menu above the Matlab command window, and select M-File. This will invoke a simple text editor with the standard Windows `look and feel' which will suffice for our labs. You can add comments to these files by inserting % signs. Any text on a given line to the right of a % sign is ignored by Matlab.

Script Files are simply a collection of Matlab commands which are executed sequentially. The commands operate on the variables in the current workspace, just as if they were typed at the prompt. Once you have typed the sequence of commands in the text editor, and have saved the file, you can run the script file by

just typing the filename, without the `.m' extension, at the prompt. Note that Matlab will have to have the folder in which the file is saved on its search path. You can add a folder to the search path by using the edit path command.

Function Files are different from script files in that they have a formal set of input variables, a formal set of output variables, and work on a variable space which is independent of the main workspace. As such, they are much like `function' subroutines in standard programming languages, such as C. You can create and save function files in the same way as script files.

1. Basic Commands

Starting MATLAB

- **clc**: Clears the command window.
- **clear**: Removes all variables from the workspace.
- **who / whos**: Lists variables in the workspace (whos provides detailed information).

Arithmetic Operations

MATLAB supports basic arithmetic operations:

- +: Addition
- -: Subtraction
- *: Multiplication
- /: Division
- ^: Power

Example:
matlab
CopyEdit

```
a = 5;
b = 3;
c = a + b; % c = 8
```

Relational Operators

MATLAB provides relational operators for logical comparisons:

- >, <, >=, <=, ==, ~=

Example:

matlab

CopyEdit

```
result = (5 > 3); % result = true (1)
```

2. Matrix Operations

MATLAB is built around matrix computations. Key commands include:

Creating Matrices:

matlab

CopyEdit

```
A = [1 2 3; 4 5 6; 7 8 9];
B = [10; 20; 30];
```

Transposing a Matrix:

matlab

CopyEdit

```
AT = A'; % Transpose of A
```

Matrix Multiplication:

matlab

CopyEdit

```
C = A * B;
```

Element-wise Operations: Use a dot before the operator (e.g., .*, ./, .^).

matlab

CopyEdit

```
D = A .* A; % Element-wise multiplication
```

3. Common Mathematical Functions

MATLAB provides numerous built-in mathematical functions:

- **Trigonometric**: sin, cos, tan, etc.
- **Exponential and Logarithmic**: exp, log, log10
- **Rounding**: round, floor, ceil
- **Square Root**: sqrt

Example:

matlab

CopyEdit

```
x = pi / 4;
y = sin(x); % y = 0.7071
```

4. Plotting and Visualization

MATLAB's plotting tools are straightforward:

Plotting a 2D Graph:

matlab

CopyEdit

```
x = 0:0.1:2*pi; % Generate x values
y = sin(x); % Compute sine values
plot(x, y); % Plot y vs. x
```

Adding Titles and Labels:

matlab

CopyEdit

```
title('Sine Wave');
xlabel('x-axis');
ylabel('y-axis');
```

Subplots:

matlab

CopyEdit

```
subplot(2, 1, 1);
plot(x, sin(x));
subplot(2, 1, 2);
```

```
plot(x, cos(x));
```

5. File and Data Management

Reading Data from Files:

matlab

CopyEdit

```
data = load('datafile.txt');
```

Saving Variables to Files:

matlab

CopyEdit

```
save('mydata.mat', 'A', 'B');
```

6. Programming Constructs

MATLAB supports common programming constructs:

If-Else:

matlab

CopyEdit

```
if a > b
   disp('a is greater than b');
else
   disp('b is greater than or equal to a');
end
```

For Loop:

matlab

CopyEdit

```
for i = 1:10
   disp(i);
end
```

While Loop:

matlab

CopyEdit

```
i = 1;
while i <= 10
    disp(i);
    i = i + 1;
end
```

7. Help and Documentation

MATLAB provides extensive documentation:

help: Displays help for a command.

matlab

CopyEdit

```
help plot;
```

- **doc**: Opens the documentation browser.

Experiment No. 2

Aim: Write a MATLAB program for generation of basic signals Sine, Cosine, Ramp, Impulse, Exponential in continuous and discrete domains.

Procedure:-

- Open MATLAB
- Open new M-file
- Type the program
- Save in current directory
- Compile and Run the program
- For the output see command window\ Figure window

Program:

% Program for the generation of unit impulse signal

```
clc;
clear all;
close all;
t = -2:1:2;
y = [zeros(1,2),ones(1,1),zeros(1,2)];
subplot(2,2,1);
stem(t,y);
ylabel ('Amplitude □');
xlabel ('(a) n □');
```

% Program for the generation of unit step sequence [u(n)*2 *u(n* 2 *N]

```
n = input('enter the N value');
t = 0:1:n-1;
y = ones(1,n);
subplot(2,2,2);
stem(t,y1);
ylabel('Amplitude □');
```

```
xlabel('(b) n □');
```

% Program for the generation of ramp sequence

```
n = input('enter the length of ramp sequence');
t = 0:n-1;
subplot(2,2,3);
stem(t,t);
ylabel('Amplitude □');
xlabel('(c) n □');
```

% Program for the generation of exponential sequence

```
n = input('enter the length of exponential sequence');
t = 0:n-2;
a = input('Enter the 'a' value');
y = exp(a*t);
subplot(2,2,4);
stem(t,y2);
ylabel('Amplitude □');
xlabel('(d) n □');
```

% Program for the generation of sine sequence

```
t=0:.01:pi;
y = sin(2*pi*t);
figure(2);
subplot(2,1,1);
plot(t,y);
ylabel('Amplitude □');
xlabel('(a) n □');
```

% Program for the generation of cosine sequence

```
t=0:.01:pi;
```

```
y = cos(2*pi*t);
subplot(2,1,2);
plot(t,y);
ylabel('Amplitude □');
xlabel('(b) n □');
```

Result:

Thus the Generation of basic signals like unit impulse, unit step, unit ramp, exponential signal and sinusoidal signals was successfully completed.

Output:

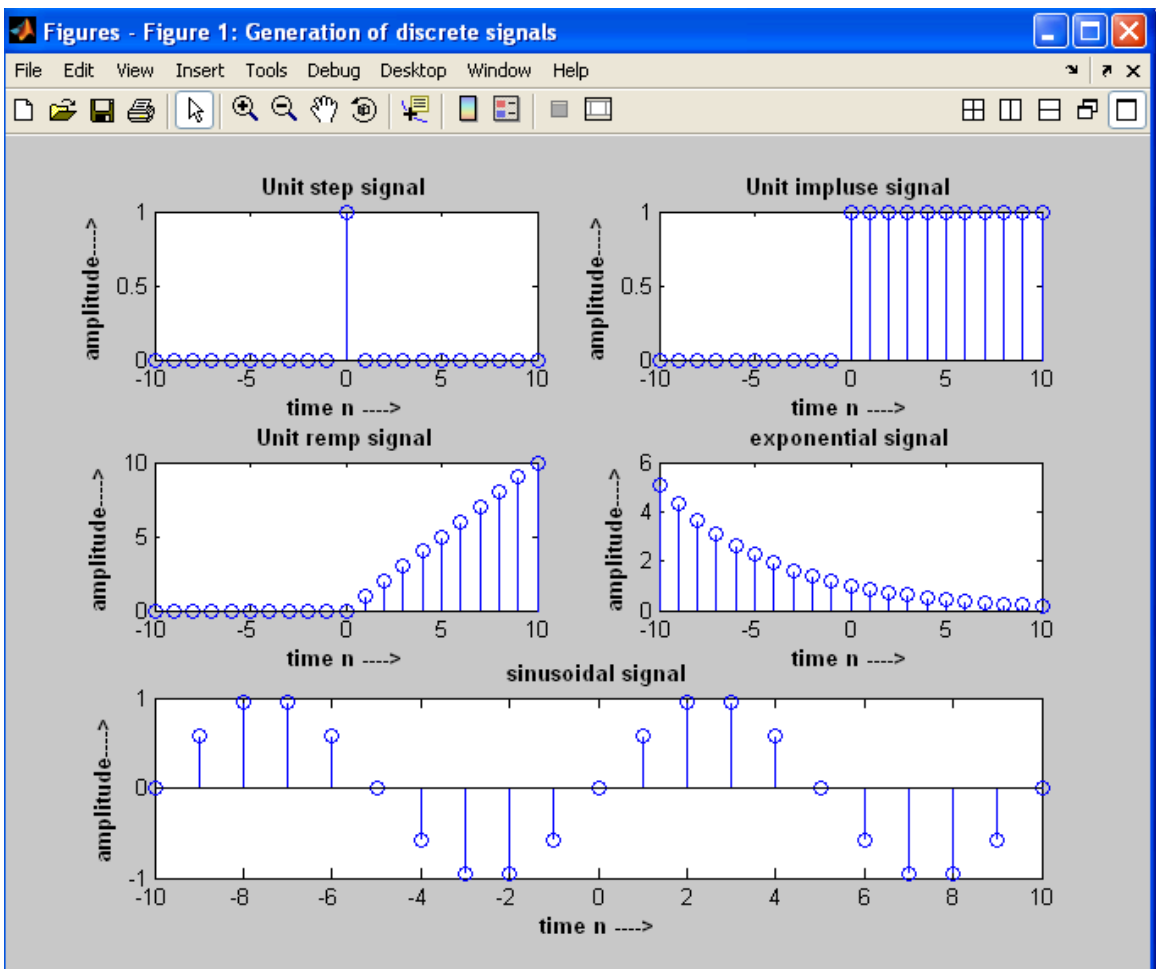

Experiment No. 3

Aim: Write a MATLAB program to plot the convolution of two sequences.

Program:

```
clc;
clear all;
close all;
n=0:8;
x1=1;
x2=0;
y1=x1.*(n>=0 & n<=2)+x2.*(n>=2 & n<=8);
subplot(2,2,1);
stem(n,y1);
axis([0 8 0 1.5]);
xlabel('time n ---->');
ylabel('amplitude---->');
title('the sequence y1[n]')
y2=x1.*(n>=0 & n<=4)+x2.*(n>=4 & n<=8);
subplot(2,2,2);
stem(n,y2);
axis([0 8 0 1.5]);
xlabel('time n ---->');
ylabel('amplitude---->');
title('the sequence y2[n]')
y=conv(y1,y2);
L=length(y);
n=0:L-1;
subplot(2,2,[3,4]);
stem(n,y);
axis([0 10 0 4]);
xlabel('time n ---->');
ylabel('amplitude---->');
title('the convolution sequence of y1[n]&y2[n]');
```

Result:

Thus the MATLAB Program to plot the convolution of two sequences is completed successfully.

Output:

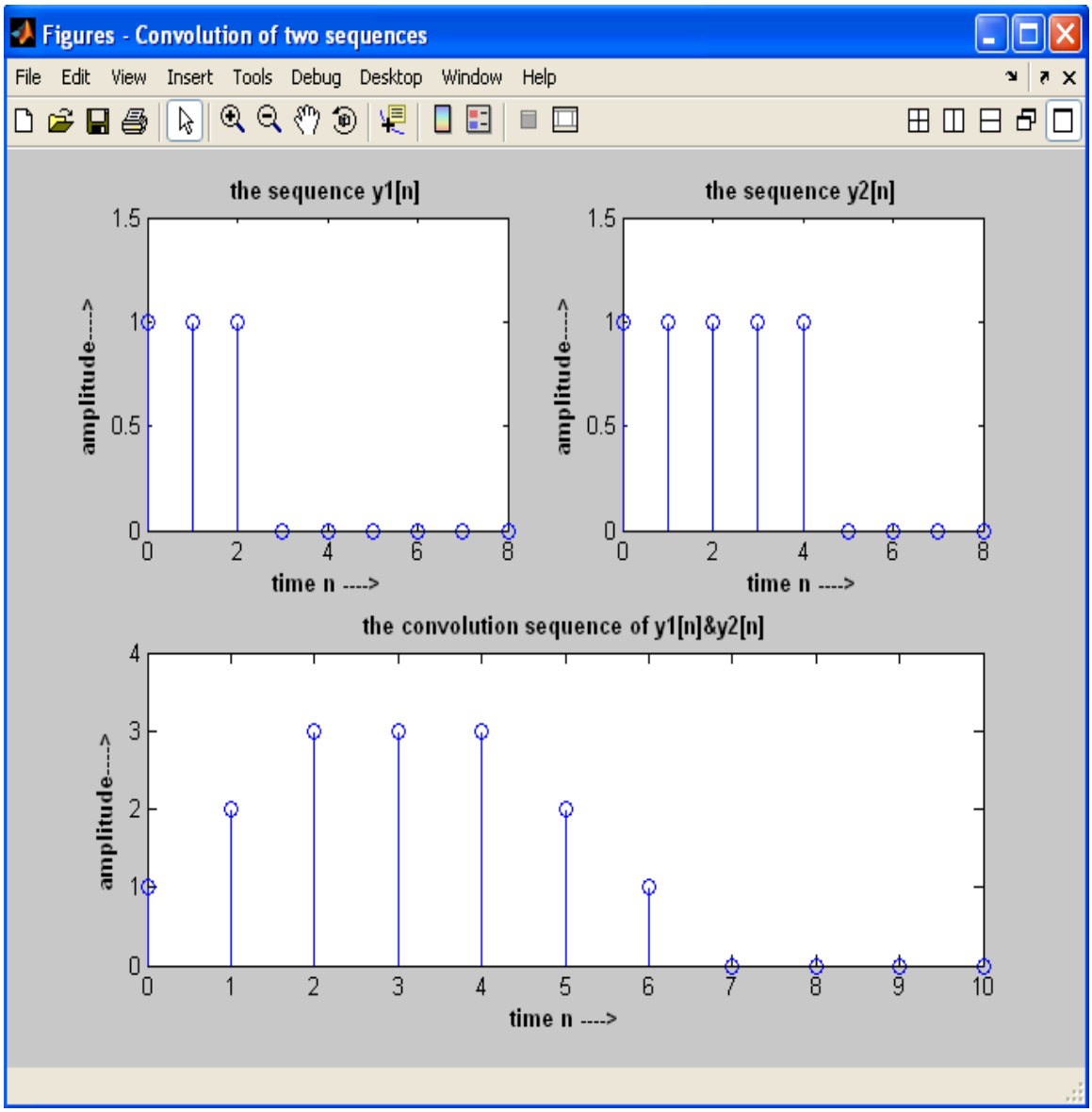

EXPERIMENT NO.4

AIM:-To verify **Z**-Parameter by using **MATLAB** software.

APPARATUS REQUIRED:- PC, MATLAB 2008b installed , Printer etc.

THEORY:-

MATLAB software is used for ideal & pre analysis of circuit output before implementing it by real hardwares.

CIRCUIT DIAGRAM (Taken as PRINT OUT from MATLAB WINDOW):-

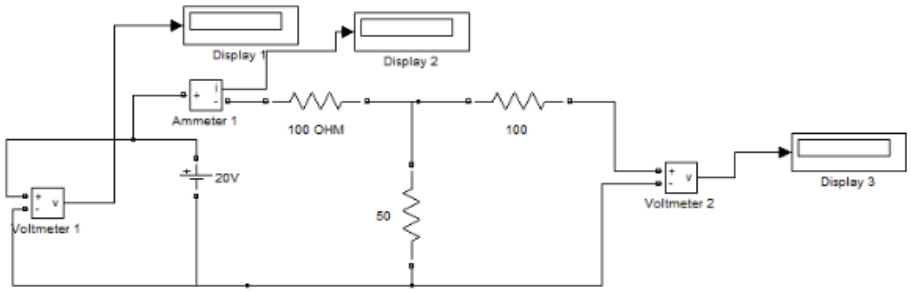

Fig 4-a : Circuit for determining Z_{11} & Z_{21}

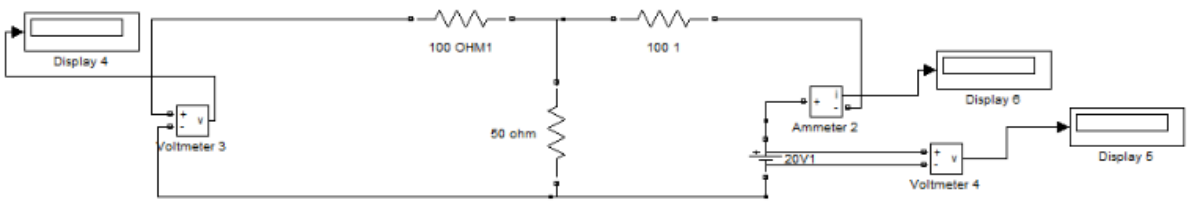

Fig 4-b : Circuit for determining Z_{12} & Z_{22}

PROCEDURE:-

1) Switch **ON** the pc & open **MATLAB 2008b** software.
2) In **FILE MENU** under **NEW** option select **MODEL.**
3) Open **SIMULINK LIBRARY**
4) Under **SIM POWER SYSTEMS** select **ELECTRICAL SOURCES** for choosing **DC Voltage Source**, select **ELEMENTS** for choosing **R-L-C SERIES BRANCH** and make it pure **RESISTANCE** by assigning any numeric value to **R** assigning **0** value to **L** & **inf** value TO **C** .Select **MEASUREMENTS** for choosing **VOLTAGE MEASUREMENT & CURRENT MEASUREMENT** as voltmeter & ammeter respectively.
5) Under **SIMULINK** SELECT **SINKS** for choosing **DISPLAY**.

6) Drag all these **ELECTRICAL SOURCE , ELEMENTS & DISPLAY** into **MODEL** & arrange according to ckt as shown in **FIG.4-a & 4-b** and assign value to **DC Voltage Source** & **RESISTANCE** by double clicking each of them.
7) Save the file with any name having extension*.**mdl.**
8) Now **SIMULATE** the **MODEL** by pressing **RUN** button & note down all reading of display.
9) Now compute the value of $\mathbf{Z_{11}(V_1/I_1)}$, $\mathbf{Z21(V_2/I_1)}$ from **fig. 4-a** display values & $\mathbf{Z12(V_1/I_2)}$ **&** $\mathbf{Z22\ (V_2/I_2)}$ from **fig.4-b** display values. These also equal to theoritical value find by applying KVL in both circuit using resistances values.
10)

RESULT:-

Z –Parameter has been successfully simulted using **MATLAB** software**.**

EXPERIMENT NO.5

AIM:- To verify reciprocity theorem by using **MATLAB** software.

APPARATUS REQUIRED:-PC, MATLAB 2008b installed, Printer etc.

THEORY:-

MATLAB software is used for ideal & pre analysis of circuit output before implementing it by real hardwares.

CIRCUIT DIAGRAM (Taken as PRINT OUT from MATLAB WINDOW):-

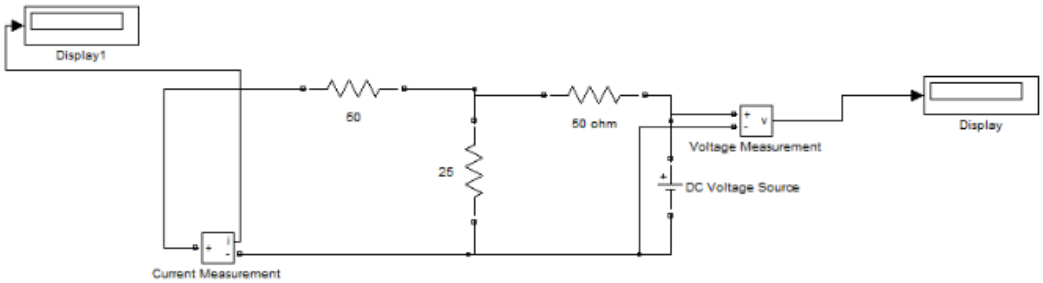

FIG: 1

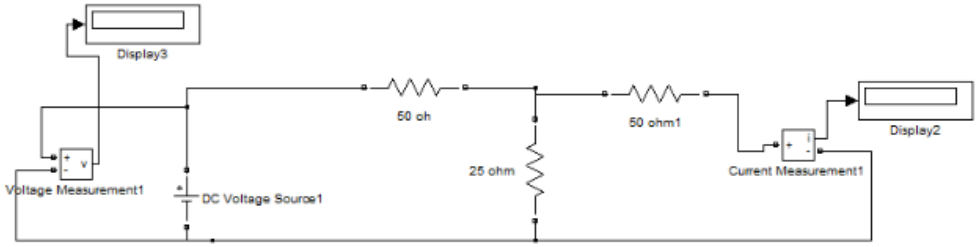

FIG: 2

PROCEDURE:-

1) Switch **ON** the pc & open **MATLAB 2008b** software.
2) In **FILE MENU** under **NEW** option select **MODEL.**
3) Open **SIMULINK LIBRARY**
4) Under **SIM POWER SYSTEMS** select **ELECTRICAL SOURCES** for choosing **DC Voltage Source**, select **ELEMENTS** for choosing **R-L-C SERIES BRANCH** and make it pure **RESISTANCE** by assigning any numeric value to **R ,** assigning **0** value to **L** & **inf** value TO **C** .Select **MEASUREMENTS** for choosing **VOLTAGE**

MEASUREMENT & CURRENT MEASUREMENT as voltmeter & ammeter respectively.

5) Under **SIMULINK** select **SINKS** for choosing **DISPLAY**.
6) Drag all these **ELECTRICAL SOURCE, ELEMENTS & DISPLAY** into **MODEL** & arrange according to ckt as shown in **FIG.1 & 2** and assign value to **DC Voltage Source** & **RESISTANCE** by double clicking each of them.
7) Save the file with any name having extension*.**mdl.**
8) Now **SIMULATE** the **MODEL** by pressing **RUN** button & note down all reading of display.
9) Now compare the value of both current, & result is both currents are same & also equal to theoritical value find by applying KVL in both circuit.

RESULT:-

Reciprocity theorem has been successfully simulted using **MATLAB** software**.**

EXPERIMENT NO : 6

AIM: To calculate and verify 'Z' & 'Y' parameters of two-port network.

APPARATUS REQUIRED: Electronic Circuit Trainer Kit , Three resistances, Connecting Wires .

BRIEF THEORY:

A two-port network has two terminals name as 1-1' to which source is connected (driving energy/input port) and 2-2' is connected to load (output port), four variables as shown in figure. These are the voltages and currents at the input and output ports, namely V_1, I_1 and V_2, I_2. To describe relationship between ports voltages and currents, two linear equations are required. From this, two are independent and two are dependent variables.

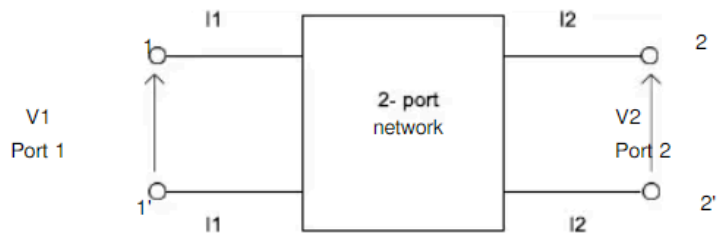

Figure 1: Two Port Network

'Z' PARAMETERS :

In Z parameters of a two-port, the input & output voltages V_1& V_2 canbe expressed in terms of input & output currents I_1& I_2. Out of four variables (i.e V_1, V_2, I_1,I_2) V_1& V_2 are dependent variables whereas I_1& I_2 are independent variables. Thus,

$V_1 = Z_{11}I_1 + Z_{12}I_2$ -----(1)

$V_2 = Z_{21}I_1 + Z_{22}I_2$ -----(2)

Here Z_{11}& Z_{22} are the input & output driving point impedances while Z_{12}& Z_{21} are thereverse & forward transfer impedances.

PROCEDURE:

a) Connect the variable voltage to port 1 and keep the port 2 open circuit i.e. $I_2 = 0$as shown in fig.4.a .Set different voltages on $V_1$and measure V_1,$V_2$and I_1 for each setting and tabulate Z_{11}& Z_{21}.
b) Connect the variable voltage to port 2 and keep the port1 open circuit i.e. $I_1 = 0$ as shown in fig.4.b. Set different voltages at V_2 and measureV_2, V_1, I_2 for each setting and tabulate Z_{12}& Z_{22}.

CIRCUIT DIAGRAM:

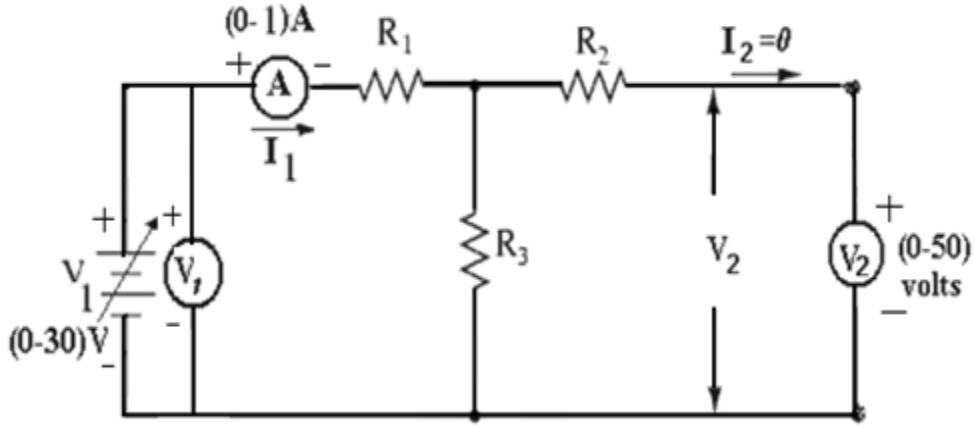

Fig 1-a: Circuit for determining Z_{11} & Z_{21}

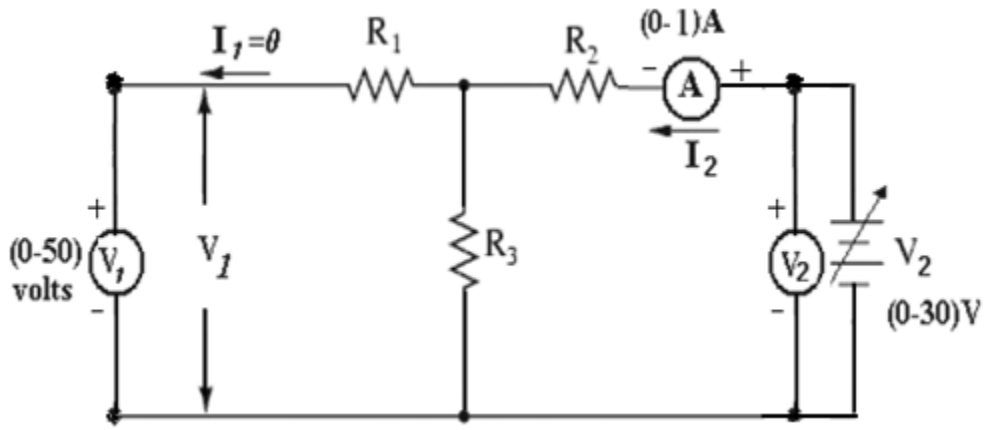

Fig 1-b: Circuit for determining Z_{12}& Z_{22}

OBSERVATIONS:

For Z parameters :

S. NO.	When Port 2 is open ckt $I_2 = 0$					When Port 1 is open ckt $I_1 = 0$				
	V_1(V)	V_2(V)	I_1(mA)	$Z_{11} = V_1/I_1(\Omega)$	$Z_{21} = V_2/I_1(\Omega)$	V_1(V)	V_2(V)	I_2(mA)	$Z_{12} = V_1/I_2(\Omega)$	$Z_{22} = V_2/I_2(\Omega)$
1										
2										

CALCULATION:-

R_1=……Ω R_2=…….Ω R_3=…….Ω

(i) Z_{11}

Practically (P) Z_{11}= (V_1/I_1)=……..Ω

Theoretical (T) Z_{11} = (R_1+R_3) =……...Ω

$$\text{ERROR} = \frac{(P) - (T)}{(P)} \times 100\ \%$$

(ii) **Z_{22}**

Practically (P) Z_{22} = (V_2/I_2)=…….Ω

Theoretical (T) Z_{22}=(R_2+R_3) =…….Ω

$$\text{ERROR} = \frac{(P) - (T)}{(P)} \times 100\ \%$$

(iii) Z_{21}

Practically (P) Z_{21}= (V_2/I_1) =……..Ω

Theoretical (T) Z_{21}= (R_3) =……Ω

$$\text{ERROR} = \frac{(P) - (T)}{(P)} \times 100\ \%$$

Ω

(iv) Z_{12}

PRACTICALLY (P) Z_{12}= (V_1/I_2)=…….,Ω

THEORETICAL (T)Z_{12}= (R_3) =……Ω

$$\text{ERROR} = \frac{(P) - (T)}{(P)} \times 100\ \%$$

'Y' PARAMETERS

BRIEF THEORY :

In Y parameters of a two-port ,the input & output currents I_1& I_2 can be expressed in terms of input & output voltages V_1& V_2 . Out of four variables (i.e I_1, I_2, V_1, V_2)I_1& I_2 are dependent variables whereas V_1& V_2 are independent variables.

$I_1 = Y_{11}V_2 + Y_{12}V_2$-------(1)
$I_2 = Y_{21}V_1 + Y_{22}V_2$-------(2)

Here Y_{11}& Y_{22} are the input & output driving point admittances while Y_{12}& $Y_{21}$are the reverse& forward transfer admittances.

PROCEDURE :

a) Connect the variable voltage to port 1 and keep the port 2short circuit i.e. $V_2 = 0$as shown in fig.4.a .Set different voltages on $V_1$and measure V_1,$I_2$and I_1 for each setting and tabulate Y_{11}& Y_{21}.
b) Connect the variable voltage to port 2 and keep the port1 short circuit i.e. $V_1 = 0$ as shown in fig.4.b. Set different voltages at V_2 and measureV_2, I_1, I_2 for each setting and tabulate Y_{12}& Y_{22}.

CIRCUIT DIAGRAM:

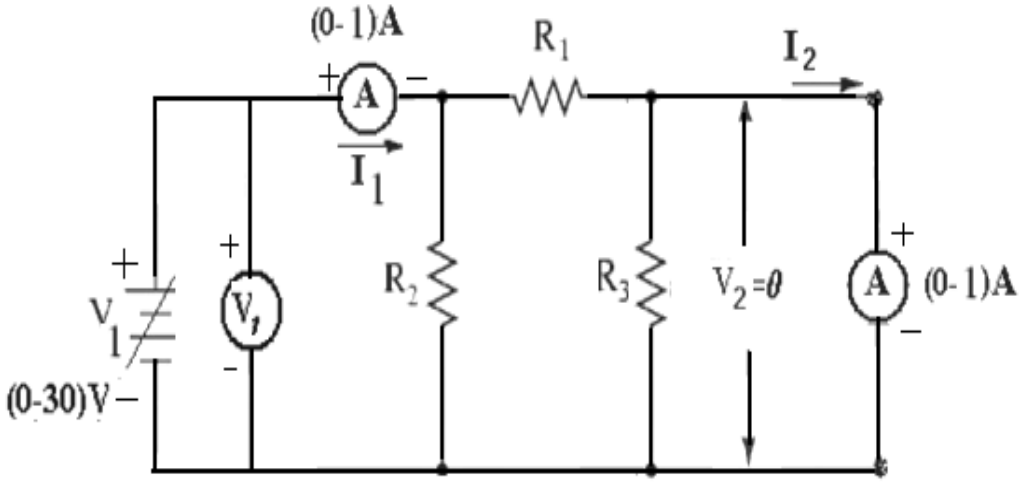

Fig : 1-c *Circuit for determining* Y_{11} & Y_{21}

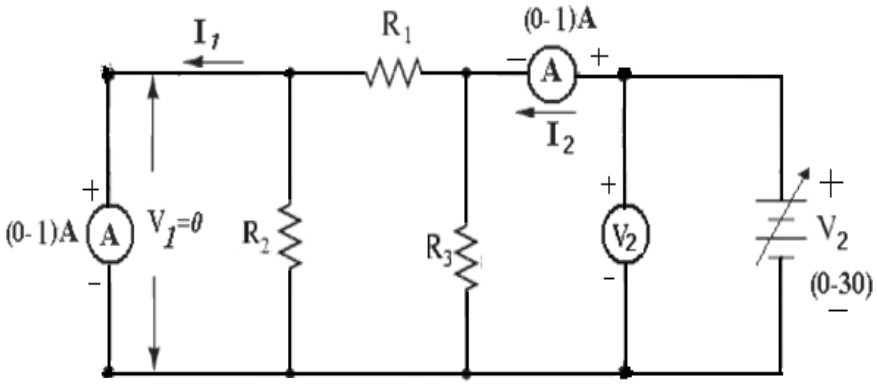

Fig : 1- d Circuit for determining Y_{12} & Y_{22}

OBSERVATIONS:

For Y parameters:

S. NO.	When Port 2 is shortckt $V_2 = 0$					When Port 1 is shortckt $V_1 = 0$				
	V_1 (V)	I_1 (mA)	I_2 (mA)	$Y_{11} = I_1/V_1$ (℧)	$Y_{21} = I_2/V_1$(℧)	V_2(V)	I_1 (mA)	I_2(mA)	$Y_{12} = I_1/V_2$(℧)	$Y_{22} = I_2/V_2$(℧)
1										
2										
3										

Calculation:

R_1=……Ω R_2=…….Ω R_3=…….Ω

(i) Y_{11}

Practically (P) $Y_{11}=(I_1/V_1)$=……℧

Theoretical (T) $Y_{11} = \frac{1}{R1} + \frac{1}{R2}$ ……℧

$$\text{ERROR} = \frac{(P) - (T)}{(P)} \times 100\ \%$$

(ii) Y_{22}

Practically (P) $Y_{22} = (I_2/V_2)$=……..℧

Theoretical (T) $Y_{22} = \frac{1}{R1} + \frac{1}{R3}$ .....℧

$$\text{ERROR} = \frac{(P) - (T)}{(P)} \times 100\ \%$$

(iii) $\mathbf{Y_{21}}$

PRACTICALLY (P) $Y_{21} = (I_2/V_1) =$.....℧

THEORETICAL (T) $Y_{21} = \frac{1}{R1}$

(iv) $\mathbf{Y_{12}}$

PRACTICALLY (P) $Y_{12} = (I_1/V_2) =$.....℧

THEORETICAL (T) $Y_{21} = \frac{1}{R1} =$..... ℧

$$\text{ERROR} = \frac{(P) - (T)}{(P)} \times 100\ \%$$

	Z Parameters				**Y Parameters**		
	Practical Values	Theoretical Values	% error		Practical Values	Theoretical Values	% error
Z_{11}				Y_{11}			
Z_{12}				Y_{12}			
Z_{21}				Y_{21}			
Z_{22}				Y_{22}			
Mean % error				Mean % error			

PRECAUTIONS:

a) Make the connections according to the circuit diagram. Power supply should be switched off.
b) Connections should be tight.
c) Note the readings carefully.

RESULT:

The **'Z'** &**'Y'** parameters of the given two port network has been calculated and verified & corresponding errors are found.

EXPERIMENT NO :7

AIM: To calculate and verify 'ABCD' parameters of two-port network.

APPARATUS REQUIRED: Electronic Circuit Trainer Kit , Three resistances, Connecting Wires.

BRIEF THEORY:

ABCD parameters are widely used in analysis of power transmission engineering where they are termed as "Circuit Parameters". ABCD parameters are also known as "Transmission Parameters". In these parameters, the voltage & current at the sending end terminals can be expressed in terms of voltage & current at the receiving end.

Thus, $V_1 = AV_2 + B(-I_2)$

$I_1 = CV_2 + D(-I_2)$

Here "A" is called reverse voltage ratio, "B" is called transfer impedance "C" is called transfer admittance & "D" is called reverse current ratio.

PROCEDURE:

a) Connect the variable voltage to port 1 and keep the port 2 open circuit i.e. $I_2 = 0$ as shown in fig.1.a .Set different voltages on V_1 and measure V_1, V_2 and I_1 for each setting and calculate A & C parameters.

b) Connect the variable voltage to port 1 and keep the port 2 short circuit i.e. $V_2 = 0$ as shown in fig.1.b. Set different voltages at V_1 and measure V_1, I_2, I_1 for each setting and calculate B & D parameters

CIRCUIT DIAGRAM:

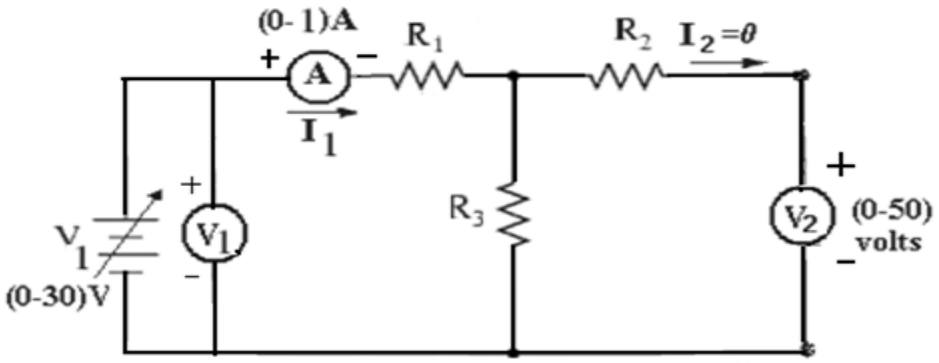

Fig 1-a: Circuit for determining A & C parameters

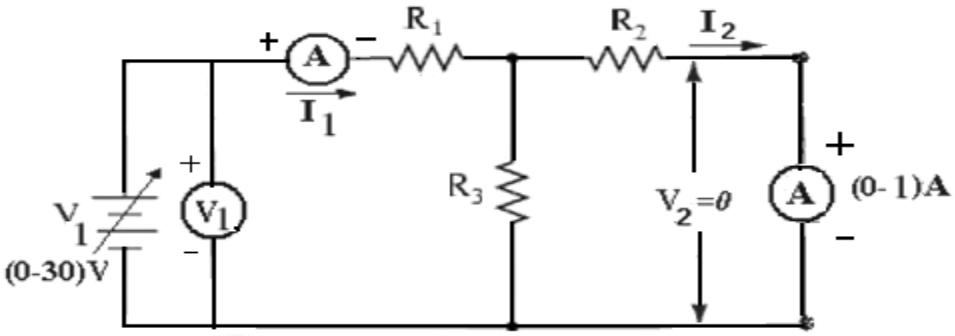

Fig 1-b: Circuit for determining B & D parameters

OBSERVATIONS:

S. NO	When Port 2 is open circuited $I_2 = 0$					When Port 2 is short circuited $V_2 = 0$				
	V_1(V)	V_2(V)	I_1 (mA)	A = V_1/V_2	C = I_1/V_2 (℧)	V_2(V)	I_1 (mA)	I_2(mA)	B = $-V_1/I_2$(Ω)	D = $-I_1/I_2$
1										
2										
3										

CALCULATION:-

R_1=……Ω R_2=…….Ω R_3=…….Ω

(i) **A parameter**

PRACTICALLY (P) A = (V_1/V_2) =…….....

THEORETICAL (T) = ($R_1 + R_2$)/ R_3

(ii) **C parameter**

PRACTICALLY (P) C = (I_1/ V_2) =……..℧

THEORETICAL (T) C = 1/ R_3 =.....…… ℧

(iii) **B parameter**

PRACTICALLY (P) B = (V_1/I_2) =…….Ω

(iv) **D parameter**

PRACTICALLY (P) D = (I_1/I_2) =…….....

	ABCD Parameters		
	Practical Values	Theoretical Values	% error
A			
B			
C			
D			
Mean % error			

PRECAUTIONS:

a) Make the connections according to the circuit diagram. Power supply should be switched off.

b) Connections should be tight.

c) Note the readings carefully.

RESULT:

The **ABCD** parameters of the given two port network has been calculated and verified & corresponding errors are found.

EXPERIMENT NO.-8

Aim: To verify Reciprocity Theorem for the given two port network

APPARATUS REQUIRED: Power Supply, Bread Board, Three resistances, Connecting

Leads. Voltmeter, Ammeter, etc.

THEORY:

In any linear bilateral network, if a source of e.m.f E in any branch produces a current I in any other branch, then the same e.m.f E acting in the second branch would produce the same current I in first branch.

PROCEDURE:

1. Connect the circuit as shown in Fig 1-d.
2. Apply some voltage V
3. Note down the ammeter reading as "I_1"
4. Inter change ammeter and voltage source as shown in Fig 1-e. and read the ammeter reading as "I_2"
5. Repeat the above procedure for different values or V and tabulate the values.
6. I_1 should be equal to I_2 in ideal case otherwise find error (I_1- I_2) .

CIRCUIT DIAGRAM:

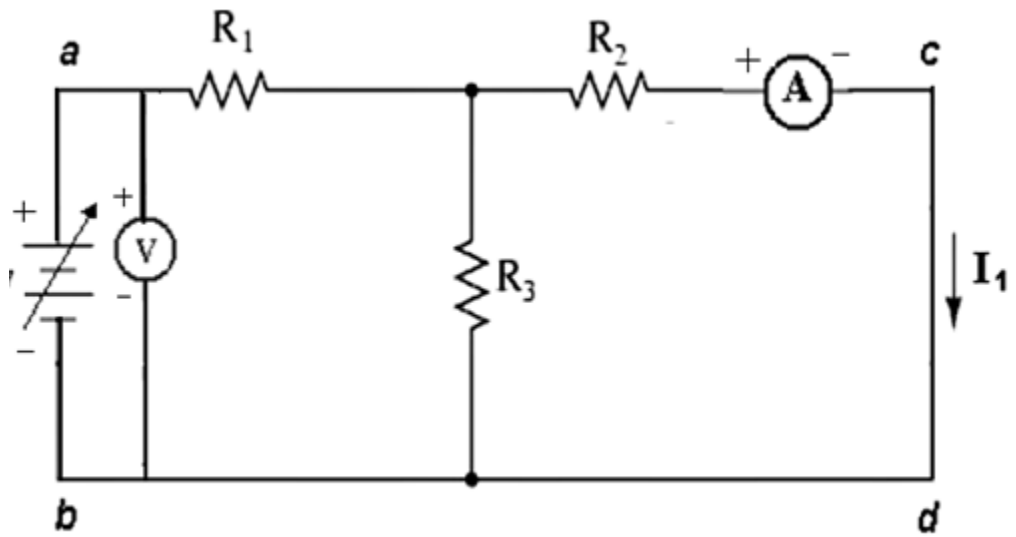

Fig 1-d Circuit for finding current I_1

-

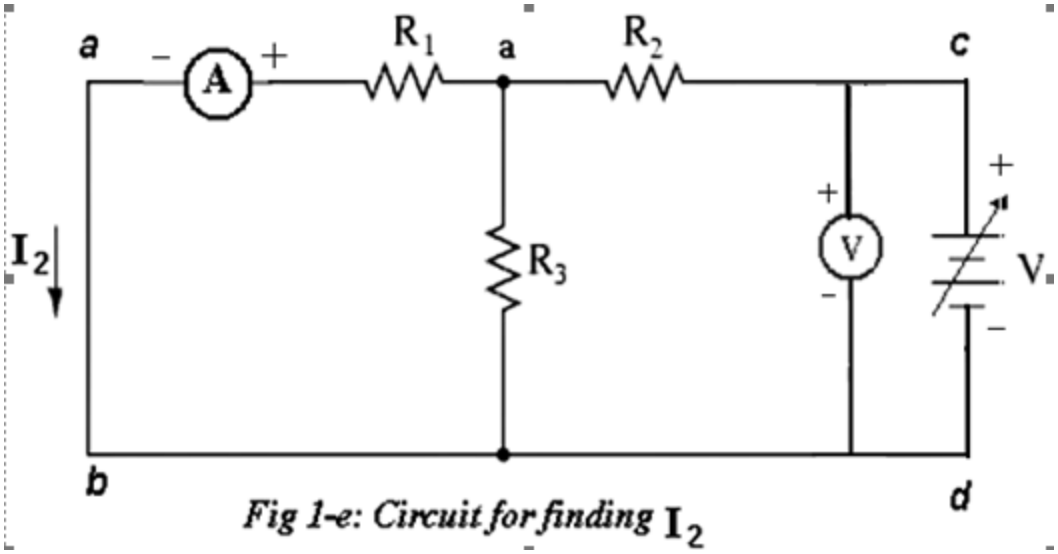

Fig 1-e: Circuit for finding I_2

OBSERVATION TABLE:

S. No.	Input Voltage V (volts)	I_1 (mA)	I_2 (mA)	Error I_1- I_2 (mA)
1.				
2.				

PREACAUTIONS:

1. Connect the circuit elements as per the circuit diagram.
2. Avoid loose connections of the circuit elements.
3. Take the readings carefully and accurately.
4. Do not tamper the circuit elements.

RESULT:-

Reciprocity theorem has been verified for different voltage sources & resistances and corresponding errors are found.

EXPERIMENT NO :9

AIM: To calculate and verify 'h' hybrid parameters of the given two-port network.

APPARATUS REQUIRED: Electronic Circuit Trainer Kit , Three resistances, Connecting Wires.

BRIEF THEORY:

In 'h' parameters of a two port network, voltage of the input port and the current of the output port are expressed in terms of the current of the input port and the voltage of the output port. Due to this reason, these parameters are called as 'hybrid' parameters, i.e. out of four variables (i.e. V_1, V_2, I_1, I_2) , V_1 & I_2 are dependent variables. Thus,

$$V_1 = h_{11}I_1 + h_{12}V_2$$

$$I_2 = h_{21}I_1 + h_{22}V_2$$

h_{11} and h_{22} are input impedance and output admittance.

h_{21} and h_{12} are forward current gain and reverse voltage gain.

PROCEDURE:

a) Connect the variable voltage to port 1 and keep the port 2 short circuit i.e. $V_2 = 0$ as shown in fig.1.a .Set different voltages on V_1 and measure V_1, I_2 and I_1 for each setting and calculate h_{11} and h_{21}.

b) Connect the variable voltage to port 2 and keep the port 1open circuit i.e. $I_1 = 0$ as shown in fig.1.b. Set different voltages at V_2 and measure V_1, V_2, I_2 for each setting and calculate h_{12} and h_{22}.

PRECAUTIONS:

a) Make the connections according to the circuit diagram. Power supply should be switched off.

b) Connections should be tight.

c) Note the readings carefully.

RESULT: The h-parameters of the two port network has been calculated and verified& corresponding errors are found.

CIRCUIT DIAGRAM:

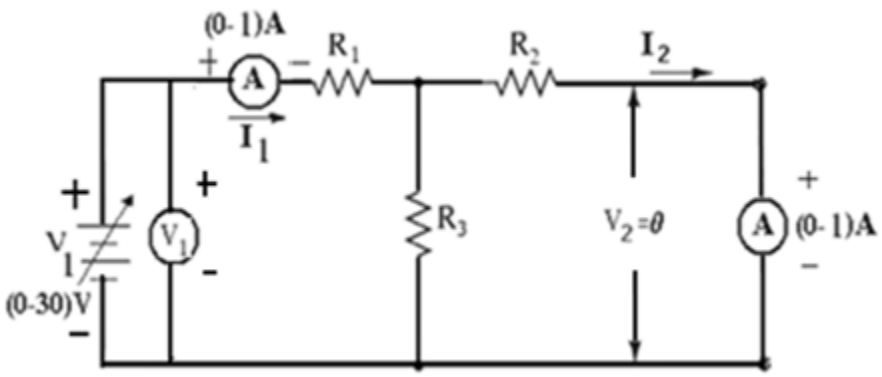

Fig 1-a: Circuit for determining h_{11} and $h_{21.}$ parameters

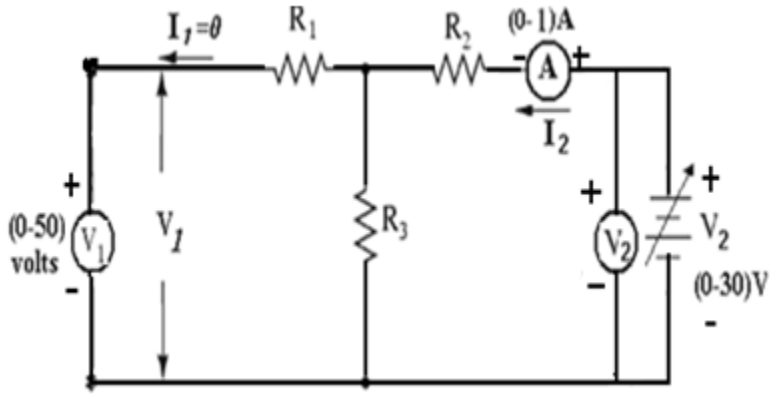

Fig 1-b: Circuit for determining h_{12} and $h_{22.}$parameters

OBSERVATION TABLE:

S. NO.	When Port 2 is is short circug vited, $V_2 = 0$					When port 1 is open circuited, $I_1 = 0$				
	V1 (V)	I1 (mA)	I_2(mA)	$h_{11} = V_1/I_1(\Omega)$	$h_{21} = I_2/I_1$	V2 (V)	I_2 (mA)	V1 (V)	$h_{12} = V_1/V_2$	$h_{22} = I_2/V_2(℧)$
1										
2										

CALCULATION:

R_1=……Ω R_2=…….Ω R_3=…….Ω

(i) $\mathbf{h_{11}}$

PRACTICALLY (P) $h_{11} = (V_1/I_1)$ =……..... Ω

(ii) $\mathbf{h_{12}}$

PRACTICALLY (P)$h_{12} = (V_1/ V_2)$ =……..

(iii) $\mathbf{h_{22}}$

PRACTICALLY (P) $h_{22}= (I_2/V_2)$ =……℧

(iv) $\mathbf{h_{21}}$

PRACTICALLY (P) $h_{21} = (I_2/I_1)$ =…….....

	'h' HYBRID Parameters		
	Practical Values	Theoretical Values	% error
$\mathbf{h_{11}}$			
$\mathbf{h_{12}}$			
$\mathbf{h_{22}}$			
$\mathbf{h_{21}}$			
Mean % error			

EXPERIMENT NO: 10

AIM: To determine the 'ABCD' parameters of the cascade connection of given two-port networks.

APPARATUS REQUIRED:Electronic Circuit Trainer Kit,Resistances,Connecting Leads,Multi-meter.

BRIEF THEORY:

Two networks are said to be connected in cascade if the output port of the first network is the input port of the second network as shown in Fig. 1.

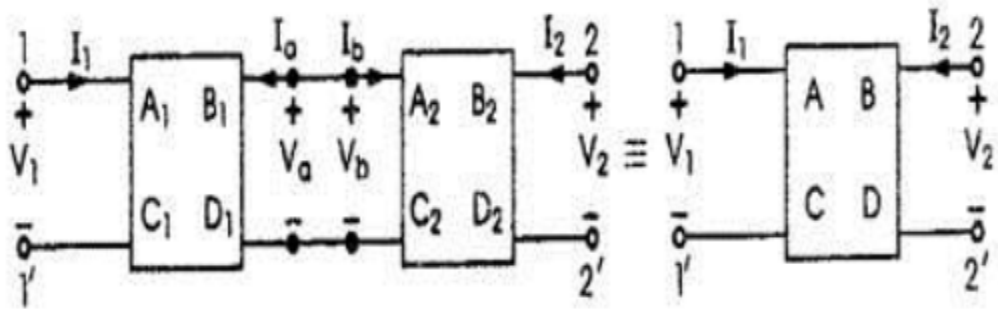

Fig 1: Two cascaded networks and their equivalent network

Where for the cascaded network equations are as:

$$V_1 = AV_2 + B(-I_2)$$

$$I_1 = CV_2 + D(-I_2)$$

Combination of above two network, gives

$$\begin{bmatrix} V_1 \\ I_1 \end{bmatrix} = \begin{bmatrix} A_1 & B_1 \\ C_1 & D_1 \end{bmatrix} \begin{bmatrix} A_2 & B_2 \\ C_2 & D_2 \end{bmatrix} \begin{bmatrix} V_2 \\ -I_2 \end{bmatrix}$$

where $\begin{bmatrix} A & B \\ C & D \end{bmatrix} = \begin{bmatrix} A_1 & B_1 \\ C_1 & D_1 \end{bmatrix} \begin{bmatrix} A_2 & B_2 \\ C_2 & D_2 \end{bmatrix}$

So $A = A_1A_2 + B_1C_2$, $B = A_1B_2 + B_1D_2$, $C = C_1A_2 + D_1C_2$, $D = C_1B_2 + D_1D_2$

Thus the overall ABCD matrix for two cascaded networks is equal to the product of ABCD matrices of the individual networks taken in order: The result may be extended to any number of cascaded networks.

PROCEDURE:

1) Connect the circuit as shown in fig and switch 'ON' the experiment board.

2) Open the port 2 & excite port 1 with a known voltage source Vs so thatV_1= V_S&

I_2 = 0.We determine to $V_2(V_{2b})$,V1(V_{1a}),$V_{1b}(V_{2a})$, $I_1(I_{1a})$, & $I_{2a}(I_{1b})$to obtain

A, A_1, A_2,C C_1& C_2 as shown in fig 2.

3) Port 1 is excited with the same voltage source Vs so that V_1 = Vs & port 2 short

circuited & V_2 = 0.We determine V1(V_{1a}),$V_{1b}(V_{2a})$, $I_1(I_{1a})$, & $I_{2a}(I_{1b})$ & $I_2(I_{2b})$to obtain B,B_1 B_2, D, D_1& D_2 as shown in fig 3

4) Switch OFF the supply after taking the readings.

PRECAUTIONS:

a) Make the connections according to the circuit diagram. Power supply should be

switched off while making connections.

b) Connections should be tight.

c) Note the readings carefully.

RESULT:

'ABCD' parameters of the cascade connection of two-port network has been determined & corresponding errors are found.

CIRCUIT DIAGRAM:

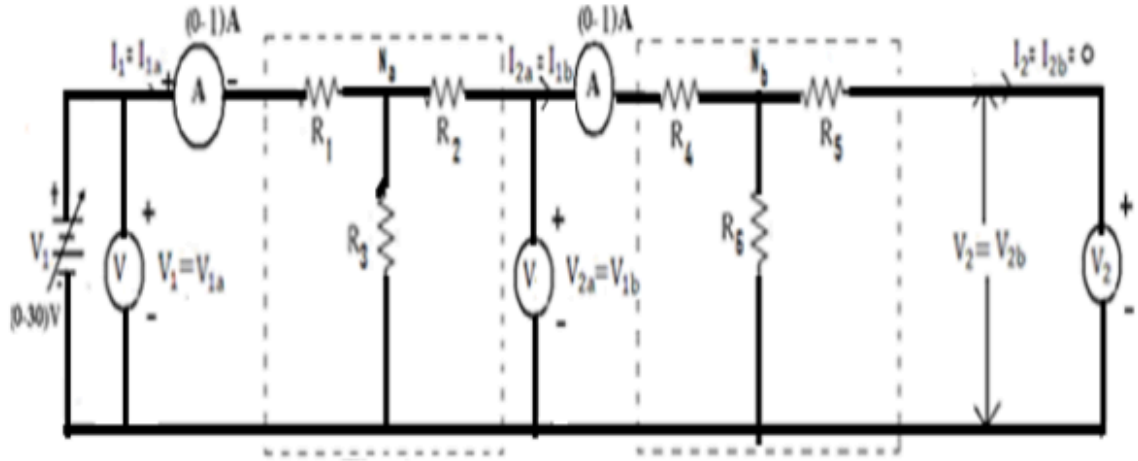

Fig 2: Circuit for determining 'A' and 'C' parameters

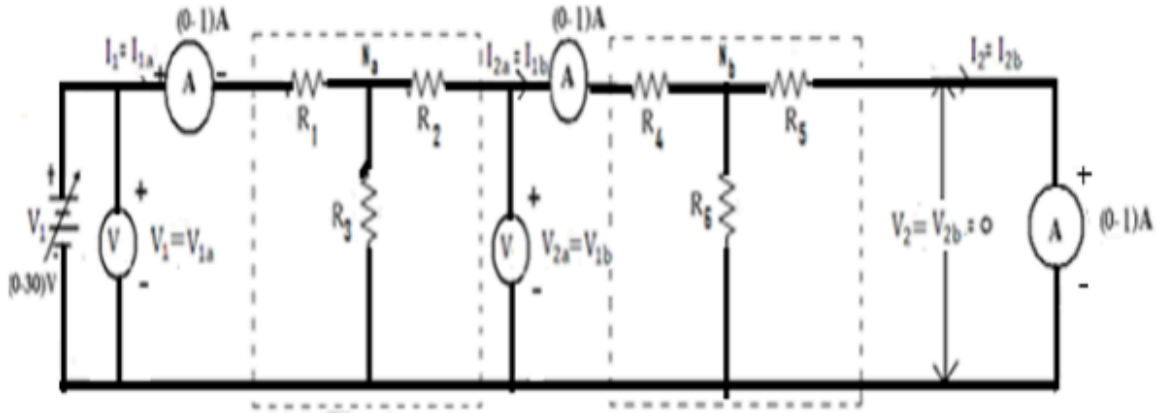

Fig 3: Circuit for determining 'B' and 'D' parameters

OBSERVATION TABLE:

For A and C parameters :

S.NO.	When Port 2 is open circuit										
	$V_1=V_{1a}$ (V)	$V_2=V_{2b}$ (V)	$V_{1b}=V_{2a}$ (V)	$I_1=I_{1a}$ (mA)	$I_{2a}=I_{1b}$ (mA)	$A=V_1/V_2$	$A_1=V_{1a}/V_{2a}$	$A_2=V_{1b}/V_{2b}$	$C=I_1/V_2$(□)	$C_1=I_{1a}/V_{2a}$ (□)	$C_2=I_{1b}/V_{2b}$(□)
1											
2											

For B and D parameters :

S.NO.	When Port2 is short circuited										
	$V_1=V_{1a}$ (V)	$V_{1b}=V_{2a}$ (V)	$I_1=I_{1a}$ (mA)	$I_{2a}=I_{1b}$ (mA)	$I_2=I_{2b}$ (mA)	$B=V_1/I_2$ (Ω)	$B_1=V_{1a}/I_{2a}$ (Ω)	$B_2=V_{1b}/I_{2b}$ (Ω)	$D=I_1/I_2$	$D_1=I_{1a}/I_{2a}$	$D_2=I_{1b}/I_{2b}$
1											
2											

CALCULATION:

A =..... **A1A2+ B1C2=.....**

B = ... Ω **A1B2 + B1D2=..... Ω.**

C =.....℧ **C1A2 + D1C2=.....℧**

D=..... **C1B2 + D1D2 =.....**

$$\text{ERROR} = \frac{A - (A1A2 + B1C2)}{A} \times 100\ \%$$

$$\text{ERROR} = \frac{B - (A1B2 + B1D2)}{B} \times 100\ \%$$

$$\text{ERROR} = \frac{C - (C1A2 + D1C2)}{C} \times 100\ \%$$

$$\text{ERROR} = \frac{D - (C1B2 + D1D2)}{D} \times 100\ \%$$

EXPERIMENT NO.-11

AIM: To determine the equivalent parameters of series connection of two port network.

APPARATUS REQUIRED: Power Supply, Bread Board, Resistances, Connecting Leads, Multimeteretc.

BRIEF THEORY: Two 2-port networks are said to be connected in series if the corresponding ports are connected in series, as shown in Fig.1.

Let N_a be described by Z_a parameters, N_b by Z_b and the overall two port network N by Z parameters. Before the networks are interconnected, the relationship between voltages and currents for the network N are given by :

In matrix form we can write

$$\begin{bmatrix} V_1 \\ V_2 \end{bmatrix} = \begin{bmatrix} z_{11a} + z_{11b} & z_{12a} + z_{12b} \\ z_{21a} + z_{21b} & z_{22a} + z_{22b} \end{bmatrix} \begin{bmatrix} I_1 \\ I_2 \end{bmatrix}$$

For the overall network N,

$$\begin{bmatrix} V_1 \\ V_2 \end{bmatrix} = \begin{bmatrix} z_{11} & z_{12} \\ z_{21} & z_{22} \end{bmatrix} \begin{bmatrix} I_1 \\ I_2 \end{bmatrix}$$

Thus, the Z matrix of the two 2-port networks connected in series-series is equal to the sum of the Z matrices of the individual networks,

$$[z] = [z_a] + [z_b]$$

This result may be generalized for any number of 2-port networks connected in series. The overall z matrix for the series-series connected 2-port networks is the sum of z matrices of the individual networks. Thus

$Z_{11} = Z_{11a} + Z_{11b,}$

$Z_{22} = Z_{22a} + Z_{22b,}$

$Z_{22} = Z_{22a} + Z_{22b}$,

$Z_{12} = Z_{12a} + Z_{12b,}$

$Z_{21} = Z_{21a} + Z_{21b}$

CIRCUIT DIAGRAM:

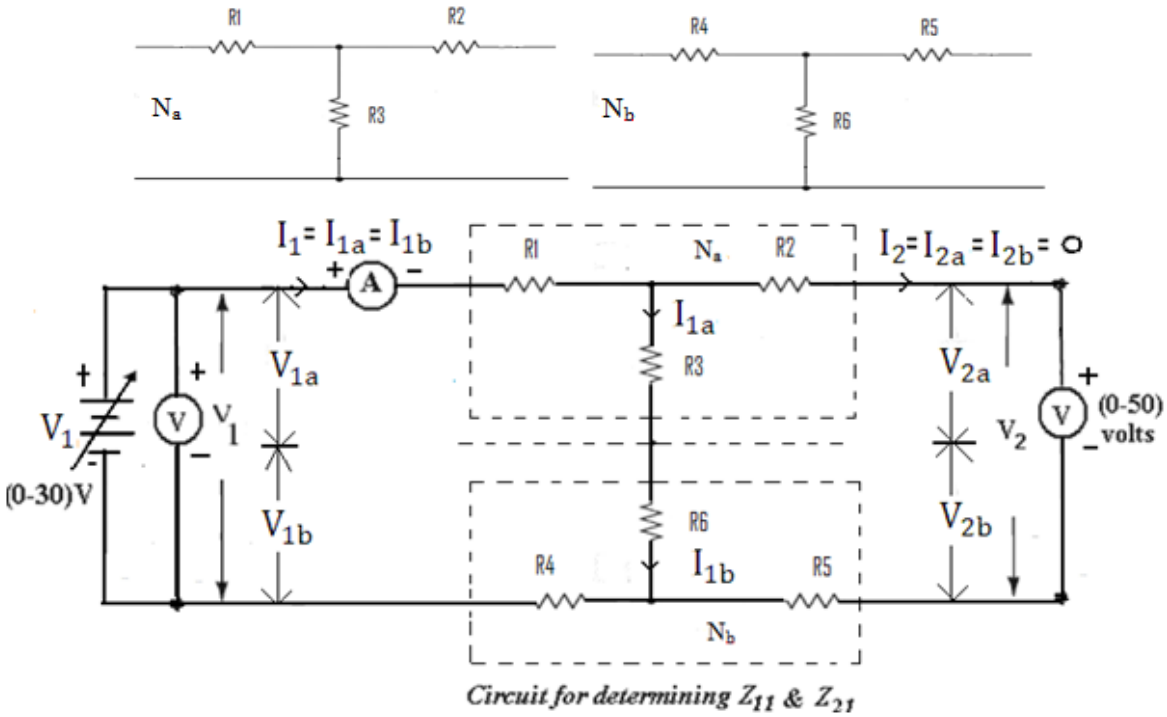

Fig 1-a: Circuit for determining Z_{11} & Z_{21}

Fig 1-b: Circuit for determining Z_{12}& Z_{22}

Fig1 :

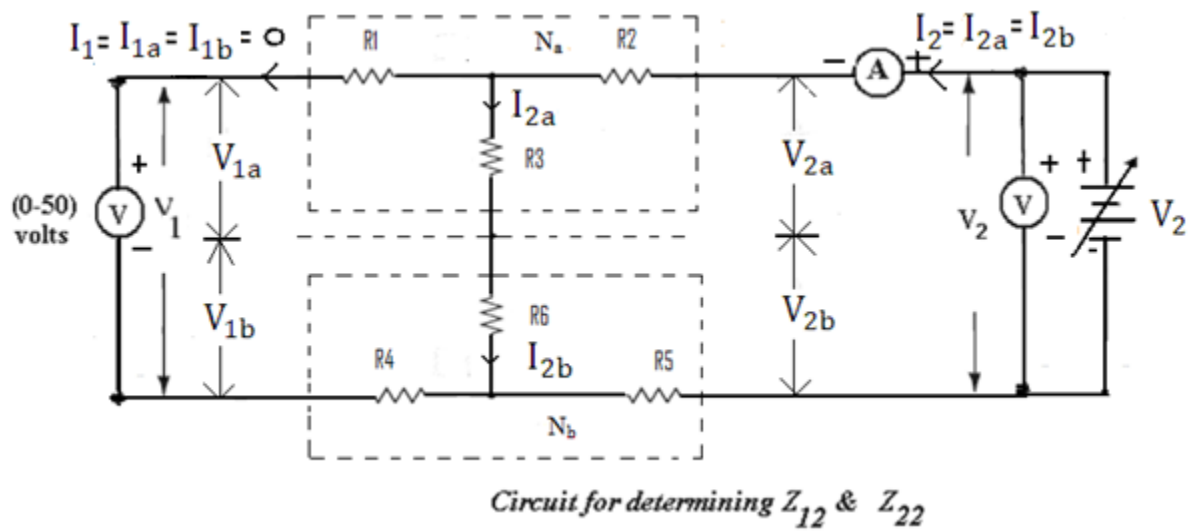

Series-series interconnection of two 2-port networks

PROCEDURE:

1) Connect the circuit as shown in fig and switch 'ON' the experiment board.

2) Open the output port & excite input port with a known voltage source Vs so that $V_1 = V_S$ & $I_2 = 0$. We determine to V_2, V_{1a}, V_{1b}, V_{2a}, V_{2b} & I_1 to obtain Z_{11}, Z_{11a}, Z_{11b} Z_{21}, Z_{21a} & Z_{21b}.

3) Input port is open circuited & Output port is excited with the same voltage source Vs sothat $V_2 = Vs$ & $I_1 = 0$. We determine V_1, V_{1a}, V_{1b}, V_{2a}, V_{2b} & I_2 to obtain Z_{22}, Z_{22a}, Z_{22b}, Z_{12}, Z_{12a} & Z_{12b}.

4) Switch OFF the supply after taking the readings.

OBSERVATION TABLE:

S. NO.	When Outport Port is open circuited												
	V_2 (V)	V_1 (V)	V_{1a} (V)	V_{1b} (V)	V_{2a} (V)	V_{2b} (V)	$I_1 = I_{1a} = I_{1b}$ (mA)	$Z_{11a} = V_{1a} / I_{1a}$ (Ω)	$Z_{11b} = V_{1b} / I_{1b}$ (Ω)	$Z_{21a} = V_{2a} / I_{1a}$ (Ω)	$Z_{21b} = V_{2b} / I_{1b}$ (Ω)	$Z_{11} = V_1 / I_1$ (Ω)	$Z_{21} = V_2 / I_1$ (Ω)
1													
2													

S. NO.	When Input Port is open circuited												
	V_2 (V)	V_1 (V)	V_{1a} (V)	V_{1b} (V)	V_{2a} (V)	V_{2b} (V)	$I_2 = I_{2a} = I_{2b}$ (mA)	$Z_{22a} = V_{2a} / I_{2a}$ (Ω)	$Z_{22b} = V_{2b} / I_{2b}$ (Ω)	$Z_{12a} = V_{1a} / I_{2a}$ (Ω)	$Z_{12b} = V_{1b} / I_{2b}$ (Ω)	$Z_{12} = V_1 / I_2$ (Ω)	$Z_{22} = V_2 / I_2$ (Ω)
1													
2													

CALCUlATION:

(i)

Z_{11}=..... Ω $Z_{11a} + Z_{11b}$=..... Ω.

$$\text{ERROR}= \frac{Z_{11} - (Z_{11a} + Z_{11b})}{Z_{11}} \times 100\ \%$$

(ii)

Z_{22}= ..... Ω $Z_{22a} + Z_{22b}$=.....Ω

$$\text{ERROR}= \frac{Z_{22} - (Z_{22a} + Z_{22b})}{Z_{22}} \times 100\ \%$$

(iii)

Z_{12} =..... Ω $Z_{12a} + Z_{12b}$=..... Ω

$$\text{ERROR}= \frac{Z_{12} - (Z_{12a} + Z_{12b})}{Z_{12}} \times 100\ \%$$

(iv)

Z_{21}=..... Ω $Z_{21a} + Z_{21b}$=..... Ω

$$\text{ERROR}= \frac{Z_{21} - (Z_{21a} + Z_{21b})}{Z_{21}} \times 100\ \%$$

PRECAUTIONS:

a) Make the connections according to the circuit diagram. Power supply should be switched off.

b) Connections should be tight.

c) Note the readings carefully.

RESULT/CONCLUSION:

The Z-parameters of series connection of two-port network has been determined and corresponding errors are found.

EXPERIMENT NO: 12

AIM: To determine equivalent 'Y' parameters of parallel connection of given 2 two-port networks.

APPARATUS REQUIRED: Electronic Circuit Trainer Kit , Wires, Six Resistances, Connecting Wires, Voltmeter, and Ammeter etc.

BRIEF THEORY:

The method of interconnecting two 2-port networks shown in Fig. is called a parallel- parallel connection of two ports because the corresponding ports of each network are connected in parallel. Let us find the 'Y' admittance parameters of the overall 2-port network N.

In matrix form we can write

$$\begin{bmatrix} I_1 \\ I_2 \end{bmatrix} = \begin{bmatrix} I_{1a} \\ I_{2a} \end{bmatrix} = \begin{bmatrix} I_{1b} \\ I_{2b} \end{bmatrix}$$

$$\begin{bmatrix} I_1 \\ I_2 \end{bmatrix} = \begin{bmatrix} y_{11a} + y_{11b} & y_{12a} + y_{12b} \\ y_{21a} + y_{21b} & y_{22a} + y_{22b} \end{bmatrix} \begin{bmatrix} V_1 \\ V_2 \end{bmatrix}$$

For the overall network N,

$$\begin{bmatrix} I_1 \\ I_2 \end{bmatrix} = \begin{bmatrix} y_{11} & y_{12} \\ y_{21} & y_{22} \end{bmatrix} \begin{bmatrix} V_1 \\ V_2 \end{bmatrix}$$

Thus, the Y matrix of the two 2-port networks connected in parallel- parallel is equal to the sum of the Y matrices of the individual networks,

$$[Y] = [Y_a] + [Y_b]$$

This result may be generalized for any number of 2-port networks connected in parallel. Thus

$Y_{11} = Y_{11a} + Y_{11b}$, $Y_{21} = Z_{21a} + Y_{21b}$, $Y_{22} = Y_{22a} + Y_{22b}$, $Y_{12} = Y_{12a} + Y_{12b}$.

CIRCUIT DIAGRAM:

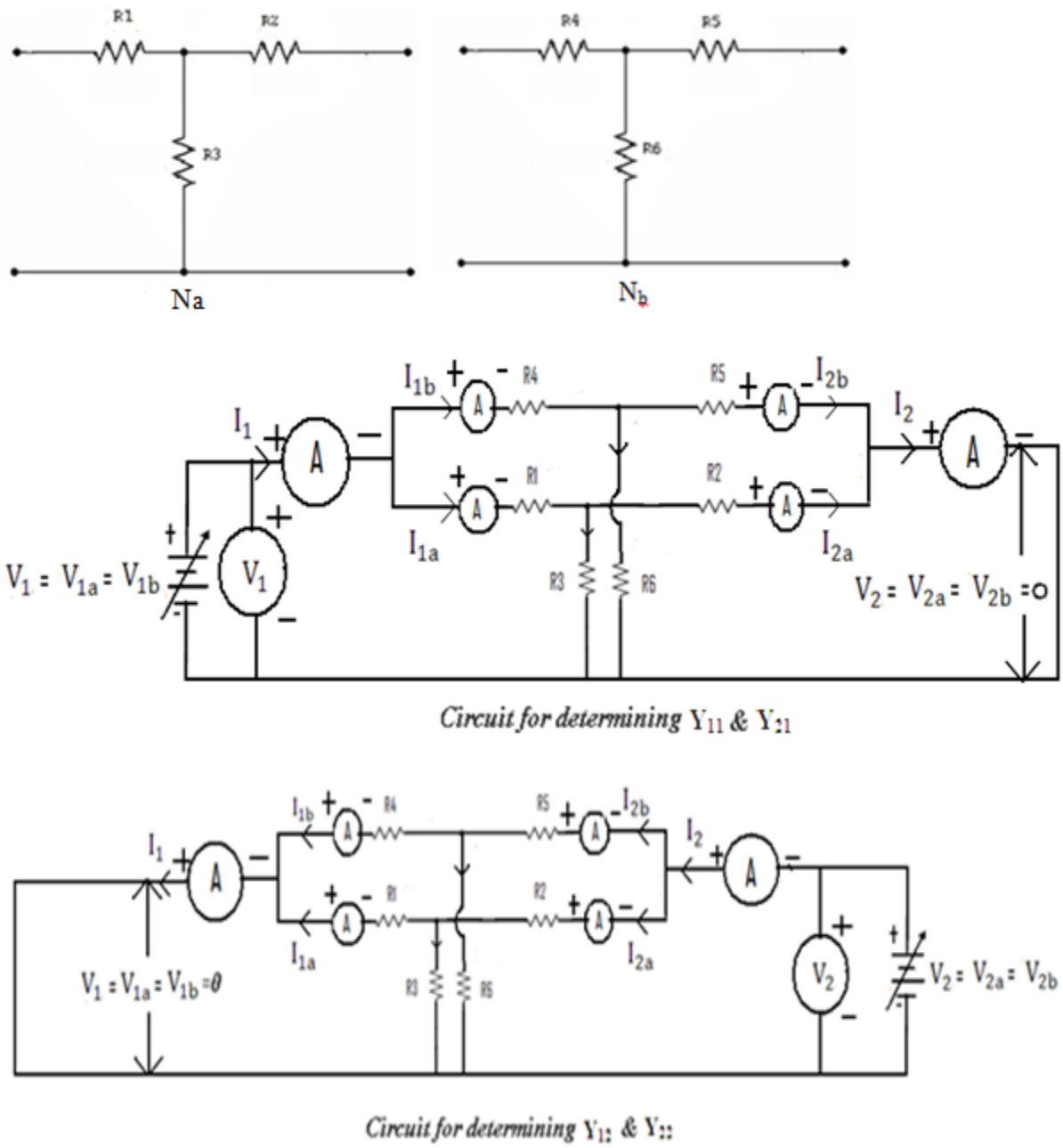

Fig 1: Circuit for determining 'Y' parameters of parallel-parallel connection

PROCEDURE:

1) Connect the circuit as shown in fig 1. and switch 'ON' the experiment board.

2) Short the port 2 & excite port 1 with a known voltage source Vs so that $V_1 = V_S$ & $V_2 = 0$. We determine to V_1, V_{1a}, V_{1b}, I_{2a}, I_{2b}, I_2 & I_1 to obtain Y_{11}, Y_{11a}, Y_{11b} Y_{21}, Z_{21a} & Y_{21b}.

3) Port 1 is short circuited & port 2 is excited with the same voltage source Vs so that $V_2 = Vs$ & $I_1 = 0$. We determine I_{1a}, I_{1b}, I_{2a}, I_{2b} & I_1, I_2 & V_2 to obtain Y_{22}, Y_{22a}, Y_{22b}, Y_{12}, Y_{12a} & Y_{12b}.

4) Switch OFF the supply after taking the readings.

OBSERVATION TABLE:

When Port2 is short circuited, $V_2=0$

S.NO	$V_1 = V_{1b} - V_{1a}$ (V)	I_1 (mA)	I_{1a} (mA)	I_{1b} (mA)	I_{2a} (mA)	I_{2b} (mA)	I_2 (mA)	I_{2a} (mA)	I_{2b} (mA)	$Y_{11} = I_1/V_1$ (□)	$Y_{21} = I_2/V_1$ (□)	$Y_{11a} = I_{1a}$ / V_{1a}(□)	$Y_{11b} = I_{1b}$ / V_{1b}(□)	$Y_{21a} = I_{2a}$ / V_{1a}(□)	$Y_{21b} = I_{2b}$ / V_{1b}(□)

When Port 1 short circuited, $V_1=0$

S.NO	$V_2 = V_{2b} - V_{2a}$ (V)	I_1 (mA)	I_{1a} (mA)	I_{1b} (mA)	I_{2a} (mA)	I_{2b} (mA)	I_2 (mA)	I_{2a} (mA)	I_{2b} (mA)	$Y_{22} = I_2/V_2$ (□)	$Y_{12} = I_1/V_2$ (□)	$Y_{22a} = I_{2a}$ / V_{2a}(□)	$Y_{22b} = I_{2b}$ / V_{2b}(□)	$Y_{21a} = I_{2a}$ / V_{1a}(□)	$Y_{21b} = I_{2b}$ / V_{1b}(□)

CALCULATION:

(i)$\mathbf{Y_{11}}$

Y_{11}=..... ℧ $Y_{11a} + Y_{11b}$=..... ℧.

$$\text{ERROR}= \frac{Y_{11} - (Y_{11a} + Y_{11b})}{Y_{11}} \times 100\ \%$$

(ii)$\mathbf{Y_{22}}$

Y_{22}= ..... ℧ $Y_{22a} + Z_{22b}$=.....℧

$$\text{ERROR}= \frac{Y_{22} - (Y_{22a} + Y_{22b})}{Y_{22}} \times 100\ \%$$

(iii)$\mathbf{Y_{12}}$

Y_{12} =..... ℧ $Y_{12a} + Y_{12b}$=..... ℧

$$\text{ERROR}= \frac{Y_{12} - (Y_{12a} + Y_{12b})}{Y_{12}} \times 100\ \%$$

(iv)$\mathbf{Y_{21}}$

Y_{21}=..... ℧$Y_{21a} + Y_{21b}$=..... ℧

$$\text{ERROR}= \frac{Y_{21} - (Y_{21a} + Y_{21b})}{Y_{21}} \times 100\ \%$$

PRECAUTIONS:

a) Make the connections according to the circuit diagram. Power supply should be switched off.

b) Connections should be tight.

c) Note the readings carefully.

RESULT/CONCLUSION:

The Y-parameters of parallel-parallel connection of 2 two-port networks has been determined and corresponding errors are found.

EXPERIMENT NO.-13

AIM: To determine the equivalent 'h' parameters of series-parallel interconnection of 2- two port networks.

APPARATUS REQUIRED: Electronic Circuit Trainer Kit , Six resistances, Connecting Wires , Multimeter

BRIEF THEORY:

Two port network are said to be connected in series-parallel if the input ports are connected in series while the output ports are connected in parallel as shown in fig 1 , such that:

$$V_1 = V_{1a} + V_{1b}$$

$$I_1 = I_{1a} = I_{1b}$$

$$V_2 = V_{2a} = V_{2b}$$

$$I_2 = I_{2a} + I_{2b}$$

So, the h-parameters of the series –parallel connected network can be written as

$$V_1 = h_{11} I_1 + h_{12} V_2$$

$$I_2 = h_{21} I_1 + h_{22} V_2$$

Where

$$h_{11} = h_{11a} + h_{11b}$$

$$h_{12} = h_{12a} + h_{12b}$$

$$h_{21} = h_{21a} + h_{21b}$$

$$h_{22} = h_{22}a + h_{22b}$$

CIRCUIT DIAGRAM:

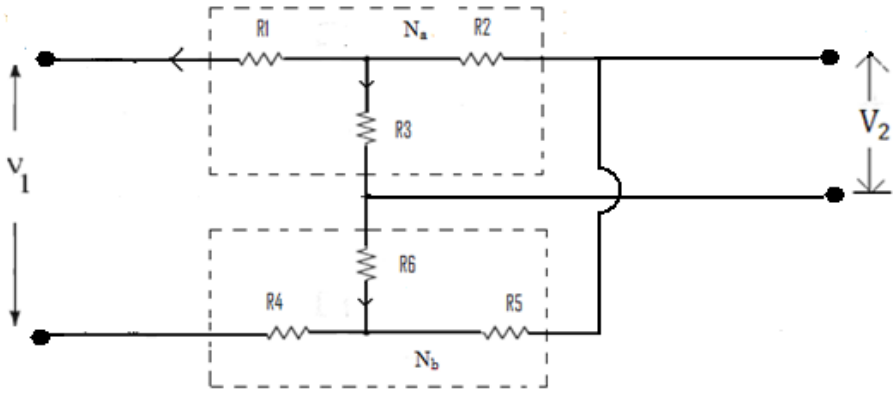

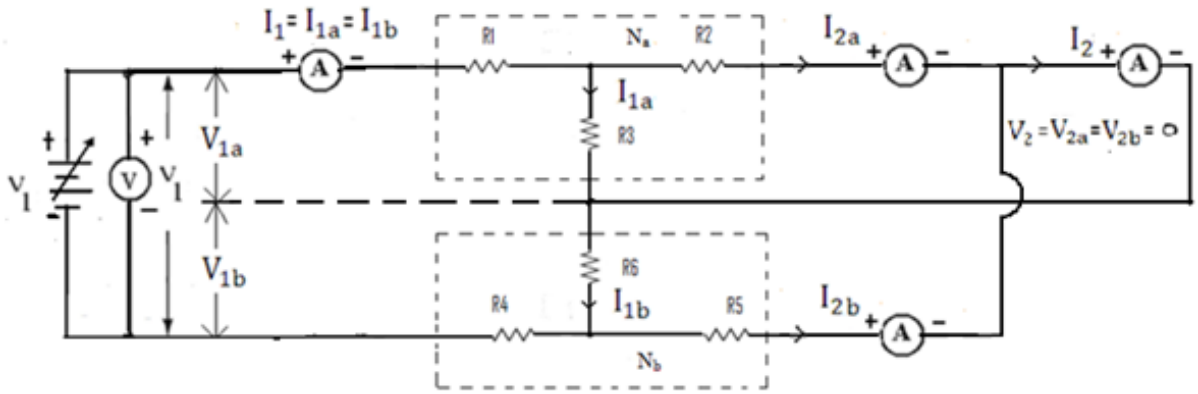

Circuit for determining h11 & h21

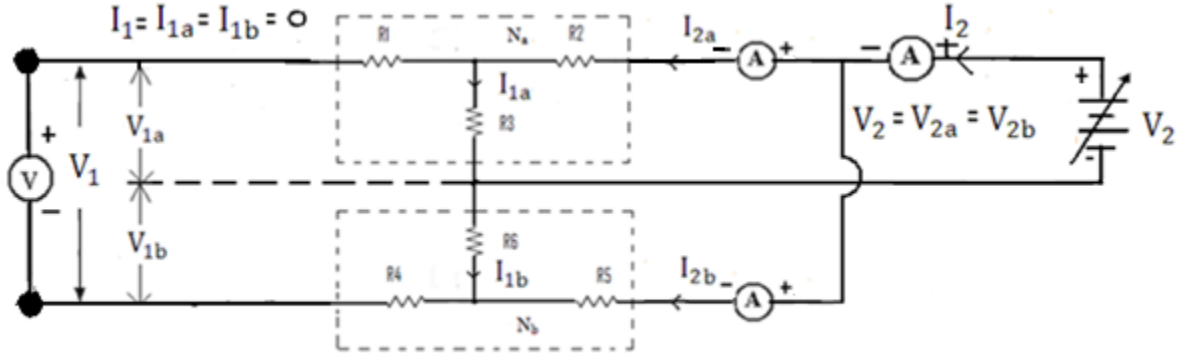

Circuit for determining h12 & h22

Fig 1 : Series-Parallel interconnection of 2-two port networks

PROCEDURE:

1) Connect the circuit as shown in fig and switch 'ON' the experiment board.

2) Short the port 2 & excite port 1 with a known voltage source Vs so that $V_1 = V_S$ & $V_2 = 0$.We determine V_1 ,I_{1a} ,I_{1b}, I_{2a}, I_{2b}, I_2 & I_1 to obtain h_{11}, h_{11a} , h_{11b} h_{21} ,h_{21a} & h_{21b}.

3) Port 1 is open circuited & port 2 is excited with the some voltage source Vs so that V_2 = Vs & $I_1 = 0$.We determine V_2 , I_2 ,I_{2a},I_{2b},V_{1a},V_{1b} & V_1 to obtain h_{22}, h_{22a} , h_{22b}, h_{12} , h_{12a} & h_{12b}.

4) Switch OFF the supply after taking the readings.

OBSERVATION TABLE:

When port 2 is short circuited,V_2=0

S. NO.	$V_1 = V_{1b} = V_{1a}$ (V)	I_1 (mA)	I_{1a} (mA)	I_{1b} (mA)	I_{2a} (mA)	I_{2b} (mA)	I_2 (mA)	$h_{11} = V_1/I_1$ (Ω)	$h_{21} = I_2/I_1$	$h_{11a} = V_{1a}/I_{1a}$ (Ω)	$h_{11b} = V_{1b}/I_{1b}$ (Ω)	$h_{21a} = I_{2a}/I_{1a}$	$h_{21b} = I_{2b}/I_{1b}$
1													
2													

When port 1 is open circuited, I_1=0

S. No.	$V_2 = V_{2b} = V_{2a}$ (V)	V_1 (V)	V_{1a} (V)	V_{1b} (V)	I_{2a} (mA)	I_{2b} (mA)	I_2 (mA)	$h_{22} = I_2/V_2$ (℧)	$h_{12} = V_1/V_2$	$h_{22a} = I_{2a}/V_{2a}$ (℧)	$h_{22b} = I_{2b}/V_{2b}$ (℧)	$h_{12a} = V_{1a}/V_{2a}$	$h_{12b} = V_{1b}/V_{2b}$
1													
2													

CALCULATION:

(i) $\mathbf{h_{11}}$

h_{11}=..... Ω $h_{11a} + h_{11b}$=..... Ω.

$$\text{ERROR}= \frac{h_{11} - (h_{11a} + h_{11b})}{h_{11}} \times 100\ \%$$

(ii) $\mathbf{h_{22}}$

h_{22}= ..... ℧ $h_{22a} + h_{22b}$=.....℧

$$\text{ERROR}= \frac{h_{22} - (h_{22a} + h_{22b})}{h_{22}} \times 100\ \%$$

(iii) $\mathbf{h_{12}}$

h_{12}=..... $h_{12a} + h_{12b}$=.....

$$\text{ERROR}= \frac{h_{12} - (h_{12a} + h_{12b})}{h_{12}} \times 100\ \%$$

(iv) $\mathbf{h_{21}}$

h_{21}=..... $h_{21a} + h_{21b}$=.....

$$\text{ERROR}= \frac{h_{21} - (h_{21a} + h_{21b})}{h_{21}} \times 100\ \%$$

PRECAUTIONS:

a) Make the connections according to the circuit diagram. Power supply should be switched off.

b) Connections should be tight.

c) Note the readings carefully.

RESULT/CONCLUSION:

The h-parameters of series -parallel connection of 2- two-port networks has been determined & corresponding errors are found.

10. Expected Viva Voce Questions

1. Is there Matlab Compiler in Matlab Tool?
2. What are disadvantages of Matlab?
3. Matlab stands for…….
4. What is the basic data element of Matlab?
5. What is the extension of the code written in Matlab?
6. What is the role of Editor Window?
7. Give steps to run the written code in matlab.
8. Give the matlab function to generate sinusoidal waveform.
9. Give the matlab function to generate co-sinusoidal waveform.
10. How the amplitude of the sin waveform can be changed in Matlab.
11. How the frequency of the sin waveform can be increased or decreased.
12. Give the matlab code to plot the waveform.
13. How two waveforms can be plotted on the same graph and with different colours to differentiate?
14. Define Signal.
15. Define system.
16. What are the major classifications of the signal?
17. Define discrete time signals and classify them.
18. Define continuous time signals and classify them.
19. Define discrete time unit step &unit impulse.
20. Define continuous time unit step and unit impulse.
21. Define unit ramp signal.
22. Define periodic signal and non-periodic signal.
23. Define even and odd signal?
24. Define Energy and power signal.
25. What is the difference between plot and subplot?
26. Write matlab function to find inverse of the matrix.
27. How we can create an Identity Matrix in Matlab.
28. What is a two-port network? Explain with an example.
29. What are the primary parameters used to describe a two-port network?
30. How do two-port networks differ from single-port networks?
31. Can a two-port network have dependent sources? Why or why not?
32. What are the applications of two-port networks in real-life circuits?
33. What are the Z-parameters (impedance parameters), and how are they defined?
34. What are Y-parameters (admittance parameters), and how do they differ from Z-parameters?
35. Define h-parameters (hybrid parameters) and explain their significance.
36. What are ABCD parameters? Where are they most commonly used?
37. hat is a reciprocal network? Give an example.
38. How do you test whether a two-port network is reciprocal?
39. What does it mean for a two-port network to be symmetric?
40. Is it possible for a network to be symmetric but not reciprocal? Explain.
41. How does reciprocity apply to passive networks?
42. Write the general equations for Z-parameters and explain each term.
43. Derive the relationship between input and output currents and voltages using Y-parameters.
44. How do you determine the input impedance of a two-port network using Z-parameters?
45. What is the significance of the determinant of the Z-parameter matrix?
46. How are ABCD parameters represented in terms of input and output voltages and currents?
47. hat happens to the two-port parameters if the network is short-circuited?
48. What changes occur in the parameters when the network is open-circuited?

References

AlanV.Oppenheim, Alan S.Willsky, S.Hamid Nawab, “Signals & Systems”, 2nd edition, Pearson Education, 1997.

M.J.Roberts, “Signals and Systems Analysis using Transform Method and MATLAB”, TMH 2003.

Rudra Pratap, “Getting Started with MATLAB”, Oxford University Press, USA.

A. H. Robbins and W. C. Miller, “Circuit Analysis: Theory and Practice”, Thomson Learning/Delmar Pub., 2007.