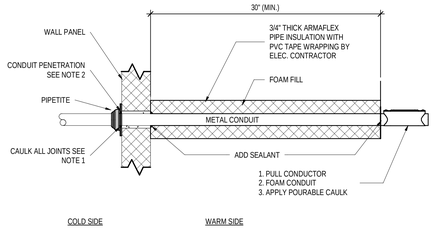

NOTES:

1. CAULKING & SEALING SHALL MAINTAIN VAPOR BARRIER CONTINUITY OF INSULATED PANEL.
2. PENETRATION SHALL BE DRILLED. AFTER CONDUIT IS INSTALLED AND PROPERLY SUPPORTED ON EACH SIDE OF WALL, REMAINING VOIDS SHALL BE FILLED COMPLETELY WITH USDA APPROVED SEALANT.
3. THIS DETAIL APPLIES TO PENETRATIONS WITH TEMPERATURE DIFFERENCE OF 15° OR MORE INCLUDING WALLS, CEILING, FLOORS AND ROOF.

A1 CONDUIT WALL PENETRATION DETAIL

SCALE: NOT TO SCALE

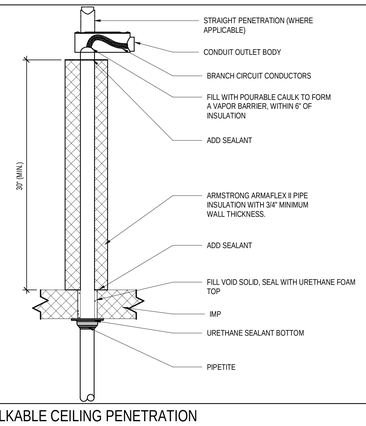

A2 WALKABLE CEILING PENETRATION

SCALE: NOT TO SCALE

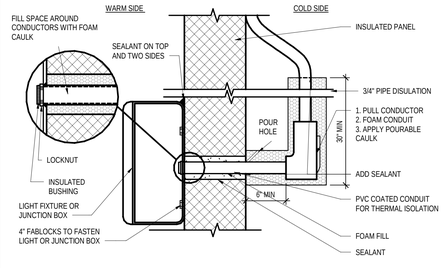

NOTES

1. CAULKING & SEALING SHALL MAINTAIN VAPOR BARRIER CONTINUITY OF INSULATED PANEL.
2. PENETRATION SHALL BE DRILLED. AFTER CONDUIT IS INSTALLED AND PROPERLY SUPPORTED ON EACH SIDE OF WALL, REMAINING VOIDS SHALL BE FILLED COMPLETELY WITH USDA APPROVED SEALANT.
3. THIS DETAIL APPLIES TO PENETRATIONS WITH TEMPERATURE DIFFERENCE OF 15° OR MORE INCLUDING WALLS, CEILING, FLOORS AND ROOF.

A3 CONDUIT PENETRATION FOR FREEZER AND COOLER

SCALE: NOT TO SCALE

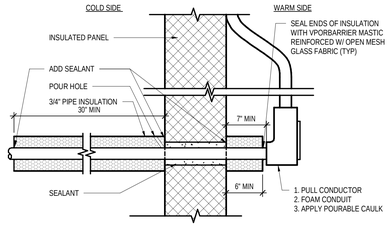

NOTES

1. FOAMING & SEALING TO PROVIDE VAPOR BARRIER CONTINUITY OF INSULATED WALL PANEL.
2. PENETRATION SHALL BE DRILLED. AFTER CONDUIT IS INSTALLED AND PROPERLY SUPPORTED ON EACH SIDE OF WALL, REMAINING VOIDS SHALL BE FILLED COMPLETELY WITH USDA APPROVED SEALANT.

A4 CONDUIT PENETRATION FOR FREEZER AND COOLER 2

SCALE: NOT TO SCALE

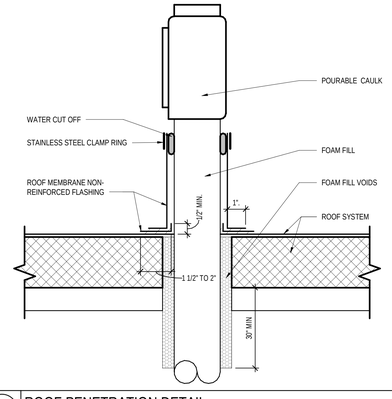

A5 ROOF PENETRATION DETAIL

SCALE: NOT TO SCALE

OWNER

PROJECT INFORMATION

VITAL FARMS
EGG CENTRAL 2
SEYMOUR,IN

stellar
TAKING SOLUTIONS FURTHER

OPERATING AS:
THE STELLAR GROUP
2900 HARTLEY ROAD, JACKSONVILLE, FL, 32257 (904) 260-2900
WWW.STELLAR.NET

SEAL

Professional certification. I hereby certify that these documents were prepared or approved by me, and that I am a duly licensed professional architect/engineer under the laws of the state of IN.

CONSULTANT

The Stellar Group, Inc.
All rights reserved. No part of this work may be used, reproduced, distributed, displayed, or otherwise communicated in any form or by any means without the prior written consent of The Stellar Group, Inc.

REVISIONS

NO.	DESCRIPTION	DATE
A	REVISED FOR BID	02/06/2026
B	GMP ISSUE	04/02/2026

DATE ISSUED:	12/12/2025
DESIGNED BY:	EJT
REVIEWED BY:	MAM
A/EOR:	
PROJECT NUMBER:	07645

SHEET TITLE

CONDUIT PENETRATIONS

SHEET ID

DT5001

4/3/2026 1:45:47 AM Autodesk Docs://07645_Vital Farms Egg Central Station 2/07645_VF EGG STA 2_D_R23.rvt