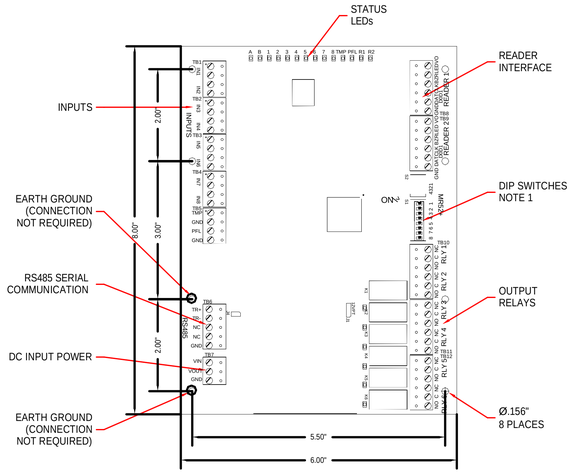

NOTES

1. SEE DETAIL C3 ON DWG DT5022 FOR DIP SWITCH SETTINGS

C1 MR52-S3 READER INTERFACE BOARD

SCALE: NOT TO SCALE

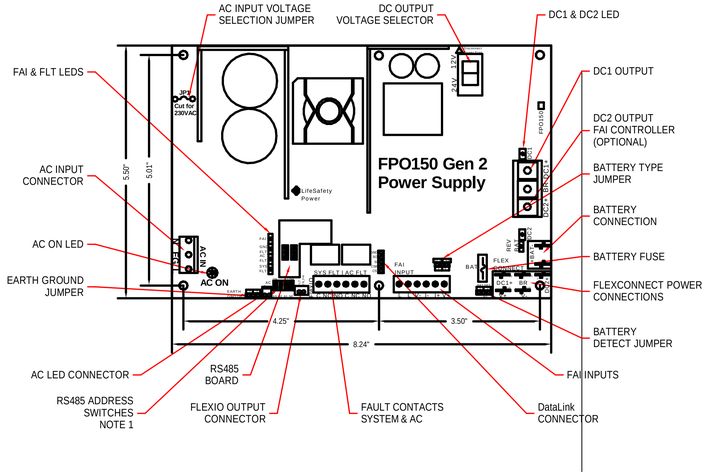

NOTES

1. SEE DETAIL C1 ON DWG DT5022 FOR JUMPER & ADDRESS SWITCH SETTINGS

C3 FPO150/250 DC POWER SUPPLY BOARDS

SCALE: NOT TO SCALE

WEST PENN AC251822B

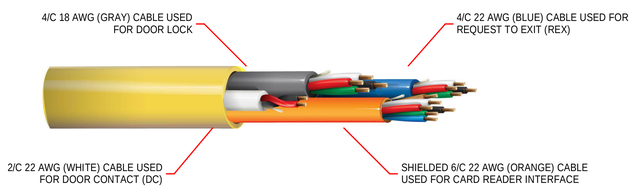

E5 ACCESS CONTROL CABLE

SCALE: NOT TO SCALE

MODEL	WEIGHT	DIMENSIONS	DOOR COUNT	TYPICAL USE
E1M	13 lbs	14 x 12 x 4.5 in.	2	ONE LP1501 or LP1502
E2M	20 lbs	20 x 16 x 4.5 in.	2 - 4	LP1502 & TWO (2) MR52
E4M	22 lbs	24 x 20 x 6.5 in.	12	LP1502 & FIVE (5) MR52
E4M1	24 lbs	24 x 20 x 6.5 in.	16	LP1502 & NINE (9) MR52
E4M2	20 lbs	8.5 x 11 x 3.0 in.	12	LP1502 & FIVE (5) MR52
E4M3	22 lbs	8.5 x 11 x 3.0 in.	4	LP1502 & TWO (2) MR52
E5M	7 lbs	8.5 x 11 x 3.0 in.	4	ONE EP1501
E6M	45 lbs	30 x 23 x 6.5 in.	4 - 8	LP1502 & FIVE (5) MR52
E6M1	48 lbs	30 x 23 x 6.5 in.	8 - 18	LP1502 ELEVEN (11) MR52
E8M	70 lbs	36 x 30 x 6.5 in.	8 - 12	LP1502 & FIVE (5) MR52
E8M1	75 lbs	36 x 30 x 6.5 in.	16 + I/O	LP1502 ELEVEN (11) MR52
E8M2	65 lbs	36 x 30 x 6.5 in.	16	LP1502 & SEVEN (7) MR52
E8M3	75 lbs	36 x 30 x 6.5 in.	16 + I/O	LP1502 & THIRTEEN (13) MR52
E8MH	60 lbs	36 x 30 x 6.5 in.	18	LP1502 & EIGHT (8) MR52
E12M	120 lbs	48 x 36 x 8.0 in.	24	LP1502 & ELEVEN (11) MR52

C5 LIFESAFETY POWER (M SERIES) ENCLOSURES

SCALE: NONE

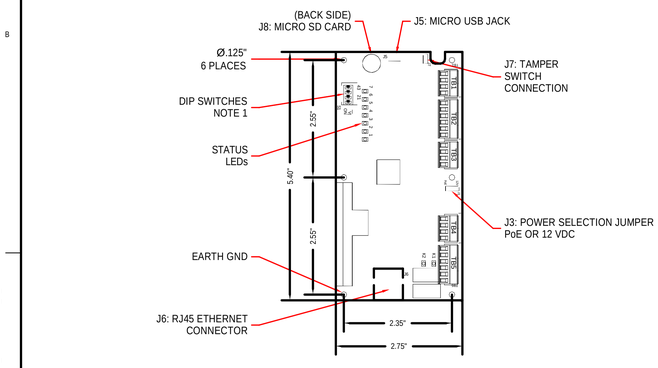

DIP SWITCH SETTINGS

1	2	3	4	Definitions
OFF	OFF	OFF	OFF	Normal operating mode.
ON	X	X	X	After initialization, enable default User Name (admin) and Password (password). The switch is read on the fly, no need to re-boot. See IT Security section for additional information.
OFF	ON	X	OFF	Use factory default communication parameters.
ON	ON	X	OFF	Use OEM default communication parameters. Contact system manufacture for details. See Bulk Erase section below.
ON	ON	OFF	OFF	Bulk Erase prompt mode at power up. See Bulk Erase below.
X	X	X	ON	Makes the LP1501 report and function like an EP1501. To be used in situations where the host software has not been updated to support the LP series product line.

NOTES

1. THE DIP SWITCHES ON S1 CONFIGURE THE OPERATING MODE OF LP1501 CONTROLLER - SEE TABLE FOR DIFFERENT MODES

A1 LP1501 INTELLIGENT CONTROL BOARD

SCALE: NOT TO SCALE

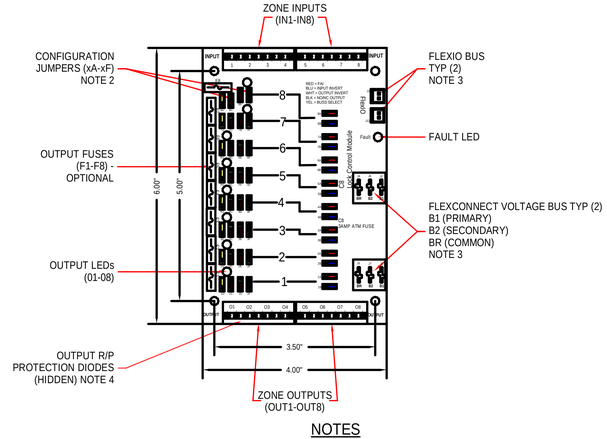

NOTES

1. ALL OUTPUTS HAVE 3 AMP MINI ATM TYPE FUSES
2. SEE DETAIL A5 ON DWG DT5022 FOR SELECTOR JUMPER DESCRIPTIONS & POSITIONING
3. EACH OF THE FLEXCONNECT & FLEXIO BUSSES HAVE TWO CONNECTORS - CAN BE USED INTERCHANGABLY
4. OUTPUTS OF THE C8 HAVE BUILT-IN REVERSE PROTECTION DIODES. IF A DELAY IN LOCK RELEASE IS PRESENT OR THE ZONE IS BEING USED AS A DRY CONTACT OUTPUT, THE DIODE FROM THAT ZONE MAY BE REMOVED. SEE C8 INSTALLATION MANUAL FOR DIRECTIONS

A3 C8 POWER CONTROL MODULE

SCALE: NOT TO SCALE

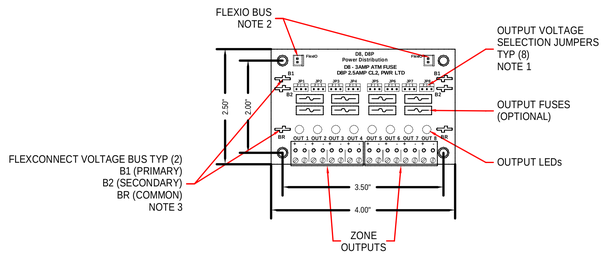

VOLTAGE SELECTION JUMPER

JUMPER ID	POS.	DESCRIPTION
YELLOW	1	(B1 BUS) THIS POSITION SELECTS THE POWER SUPPLY CONNECTED TO THE B1 INPUT OF THE C8 BOARD
	2	(B2 BUS) THIS POSITION SELECTS THE POWER SUPPLY CONNECTED TO THE B2 INPUT OF THE C8 BOARD

NOTES

1. REFER TO TABLE ABOVE FOR VOLTAGE SELECTION JUMPER POSITIONS
3. EACH OF THE FLEXCONNECT & FLEXIO BUSSES HAVE TWO CONNECTORS - CAN BE USED INTERCHANGABLY
4. ALL OUTPUTS ARE PROTECTED WITH 2.5 AMP SOLID STATE PTCs

A5 D8P POWER DISTRIBUTION MODULE

SCALE: NOT TO SCALE

OWNER

PROJECT INFORMATION

VITAL FARMS EGG CENTRAL 2
SEYMOUR,IN

stellar
TAKING SOLUTIONS FURTHER

OPERATING AS:
THE STELLAR GROUP
2900 HARTLEY ROAD, JACKSONVILLE, FL, 32257 (904) 260-2900
WWW.STELLAR.NET

SEAL

Professional certification. I hereby certify that these documents were prepared or approved by me, and that I am a duly licensed professional architect/engineer under the laws of the state of IN.

CONSULTANT

The Stellar Group, Inc.
All rights reserved. No part of this work may be used, reproduced, distributed, displayed, or otherwise communicated in any form or by any means without the prior written consent of The Stellar Group, Inc.

REVISIONS

NO.	DESCRIPTION	DATE
A	GMP ISSUE	04/02/2026

DATE ISSUED: 04/02/2026
DESIGNED BY: EJT
REVIEWED BY: MAM
A/EOR:
PROJECT NUMBER: 07645

SHEET TITLE

ACCESS CONTROL DETAILS SHEET 1

SHEET ID

DT5003

4/3/2026 1:46:23 AM Autodesk Docs://07645_Vital Farms Egg Central Station 2/07645_VF EGG STA 2_D_R23.rvt