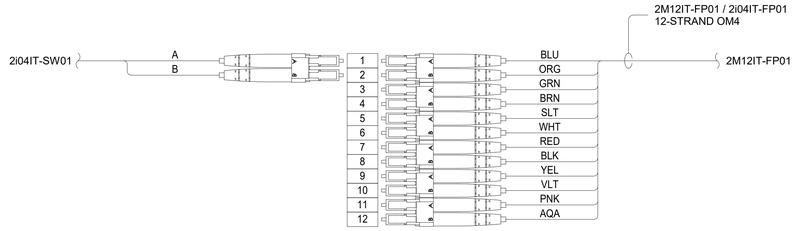

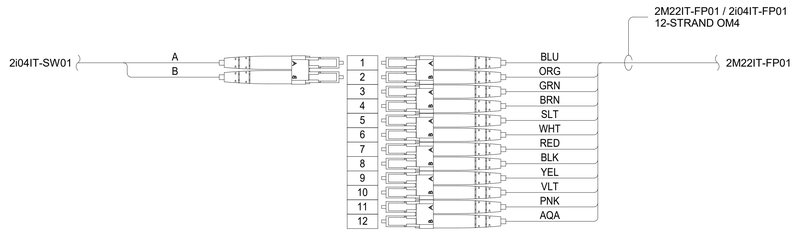

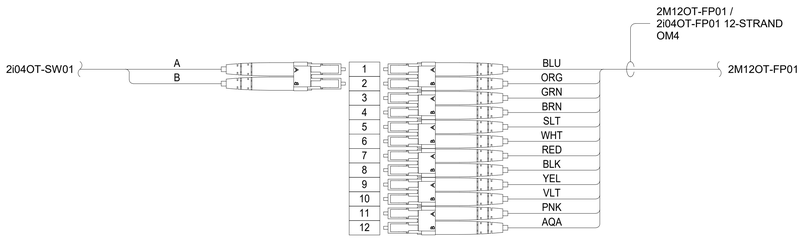

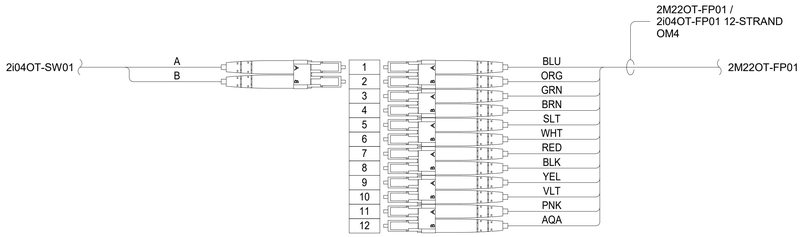

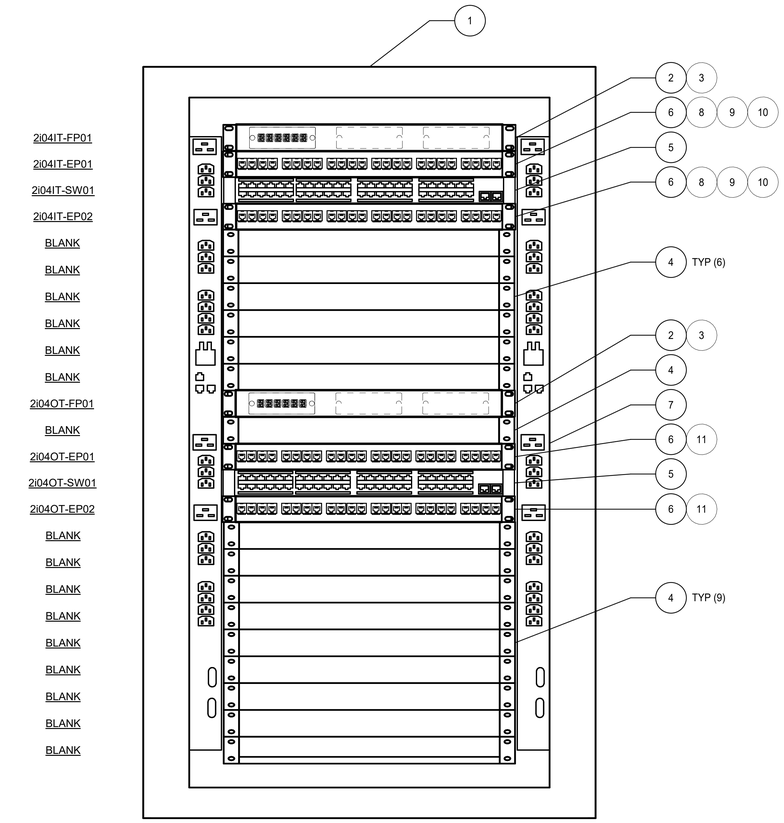

A3 IDF 2i04 LAYOUT
SCALE: 3" = 1'-0"

BILL OF MATERIALS

ITEM	REQ'D	DESCRIPTION
1	1	24U TRIPP-LITE 24" WIDE RACK M/N SR24UB
2	2	1U PANDUIT OPTICOM RACK MOUNT FIBER ENCLOSURE, M/N FRME1U
3	2	1U PANDUIT DUPLEX LC OPTICOM FIBER ADAPTER PANEL
4	16	1U PANDUIT HORIZONTAL BLACK STEEL FILLER PANEL, M/N DPFP1
5	2	ARISTA 48-PORT NETWORK SWITCH
6	4	1U PANDUIT 24-PORT ETHERNET PATCH PANEL, M/N CPP24WBLY
7	2	EATON METERED INPUT RACK PDU G4, 0U, 23U, C20/L6-20 INPUT, 10FT CORD, 3.8kW, 16A, 100/240V, 24 OUTLETS (12) C13 (12) C39 M/N EVMIL620A
8	12	PANDUIT MINI-COM TX6A 10GIG UTP YELLOW JACK MODULES
9	12	PANDUIT MINI-COM TX6A 10GIG UTP WHITE JACK MODULES
10	24	PANDUIT MINI-COM TX6A 10GIG UTP BLUE JACK MODULES
11	48	PANDUIT MINI-COM TX6A 10GIG UTP RED JACK MODULES

NOTES

1. CUSTOMER WILL PROVIDE ALL NETWORK SWITCHES
2. KEEP POWER & COMMUNICATION CABLES ROUTED AS SEPARATELY AS POSSIBLE - CROSS AT 90 IF CABLES MUST CROSS
3. ALL NETWORK DROPS SHALL BE TAGGED ON BOTH ENDS OF CABLE WITH "FROM/TO" FORMAT WITH BRADY B-427 ROTATING VINYL WIRE LABELS (EX. 2i01IT-SW01_24 / TD-1001)
4. PATCH CABLES FROM SWITCH TO PATCH PANEL SHALL BE TAGGED WITH FINAL EQUIPMENT / DEVICE NUMBER (EX. 2M11, WAP-1001, ETC)

IDF / MDF RACK & DEVICE LEGEND

ABXX-YYZZ

- SEQUENTIAL NUMBER
- DEVICE ABBREVIATION
  - EP = ETHERNET PATCH PANEL
  - FP = FIBER OPTIC PATCH PANEL
  - PD = POWER DISTRIBUTION UNIT
  - SW = NETWORK SWITCH
- NETWORK
  - IT = INFORMATION TECHNOLOGY
  - OT = OPERATIONAL TECHNOLOGY
  - CS = CAMERA SYSTEM
- IDF CABINET NUMBER (i01, i02, i03...)
  MDF CABINET NUMBER (M11, M12, M13...)
- FACILITY ENUMERATION (1, 2, 3...)

OWNER

PROJECT INFORMATION

VITAL FARMS
EGG CENTRAL 2
SEYMOUR,IN

stellar
TAKING SOLUTIONS FURTHER

OPERATING AS:
THE STELLAR GROUP
2900 HARTLEY ROAD, JACKSONVILLE, FL 32257 (904) 260-2900
WWW.STELLAR.NET

SEAL

Professional certification. I hereby certify that these documents were prepared or approved by me, and that I am a duly licensed professional architect/engineer under the laws of the state of ____

CONSULTANT

The Stellar Group, Inc.
All rights reserved. No part of this work may be used, reproduced, distributed, displayed, or otherwise communicated in any form or by any means without the prior written consent of The Stellar Group, Inc.

REVISIONS

NO.	DESCRIPTION	DATE
A	ISSUED FOR BID	01/16/2026
B	REVISED FOR BID	02/06/2026

DATE ISSUED:	01/09/2026
DESIGNED BY:	ARS
REVIEWED BY:	CDS
A/EOR:	
PROJECT NUMBER:	07645

SHEET TITLE

IDF 2i04 LAYOUT & DETAIL

SHEET ID

DT6034

2/6/2026 3:36:09 PM Autodesk Docs://07645_Vital Farms Egg Central Station 2/07645_VF EGG STA 2_D_R23.rvt