Project Report for Natural Language Processing

Image to Text Dataset for Quantum Computing

Submitted by

Keval Dineshbhai Viradiya

Supervised by

Prof. Dr. Patrick Levi

Ostbayerische Technische Hochschule Amberg-Weiden
Department of Electrical Engineering, Media and Computer Science

December 22, 2025

Abstract

Image-to-text models are typically trained on natural images and often perform poorly on schematic figures such as quantum circuit diagrams. These diagrams follow different visual conventions and are rarely included in standard training datasets. To enable the specialization of image-to-text models for quantum computing, a dedicated dataset of quantum circuit images and descriptive text is required.

This project explores the feasibility of compiling such a dataset automatically from scientific publications. A general and reproducible pipeline is developed to extract quantum circuit diagrams from research papers published on the arXiv platform in the *quant-ph* category. The approach combines layout-aware figure extraction with a multi-stage identification strategy that integrates geometric analysis, OCR-based visual text detection, caption-level natural language processing, and embedding-based semantic reasoning. A conservative decision logic is applied to reduce the inclusion of non-circuit figures.

The focus of this work is on the design of the dataset compilation method and on strategies to improve data quality under realistic constraints, such as the absence of ground-truth annotations. The proposed methodology is intended to be generalizable and suitable for future large-scale dataset collection.

1 Introduction

Schematic figures in scientific papers follow visual rules that are very different from those of natural images. They often consist of symbols, lines, and domain-specific notation instead of objects or scenes. Because of this, general image-to-text models usually fail to describe such figures correctly.

Quantum circuit diagrams are a representative example. They encode quantum operations using structured layouts, gate symbols, and wire connections. Although these diagrams are central to quantum computing research, they appear only as a small subset of figures in scientific publications. Most figures in quantum physics papers are plots, tables, or experimental diagrams, which makes the automatic identification of quantum circuits a challenging selection problem.

This work focuses on the design of a method to automatically collect quantum circuit figures together with relevant descriptive text from scientific PDFs. Rather than relying on manual annotation or model training, the proposed approach combines layout-aware figure extraction with multiple independent analysis stages. These stages use visual structure, embedded text, surrounding captions, and semantic similarity to decide whether a figure represents a quantum circuit.

The emphasis of this project is on reliability, reproducibility, and general applicability. Conservative decision rules are applied to reduce the inclusion of incorrect figures, even when this leads to the rejection of uncertain cases. The resulting methodology provides a practical basis for building domain-specific image-to-text datasets from scientific literature.

2 Input Data Discovery

The purpose of this analysis is to understand how the input data is structured, how much it varies, and where ambiguity appears, before explaining the proposed solution.

In scientific research papers, figures are usually not stored as single, clearly defined objects. Instead, a figure is often built from many small elements such as vector drawings, raster images, and text labels that are scattered across the document. Because of this, a figure exists clearly for a human reader, but not as a single object in the document structure. This makes automatic figure extraction difficult and requires methods that are aware of the page layout rather than simple object-based extraction.

A high level of diversity is present in the figures found in quantum physics papers. Many figures show plots, tables, or experimental schematics, while only a small number represent actual quantum circuit diagrams. Some non-circuit figures can look similar to circuits at first glance, which increases the chance of incorrect classification. This makes careful and conservative identification necessary.

The document layout adds further difficulty. Figures may appear in multi-column pages, may span across columns, or may be divided into several sub-panels that contain different kinds of content. In addition, figure numbering is not always consistent across papers, and some figures do not have clear figure numbers at all. To handle this reliably, figures must be assigned internal logical indices that do not depend on the original formatting.

Captions introduce another source of uncertainty. Some captions clearly describe quantum circuits using technical terms, while others mainly discuss experimental results or performance measures without showing the circuit itself. In some cases, figures do not have captions at all. For this reason, caption text alone cannot be used as a reliable indicator that a figure is a quantum circuit diagram. In addition, captions of classical or electrical circuits often use words that are also common in quantum circuit descriptions. Terms related to gates, connections, or signal flow may appear in both cases. Because of this shared language, captions can be misleading, and it becomes difficult to decide whether a figure shows a quantum circuit or a non-quantum circuit when relying only on the caption text.

3 Challenges

- Identifying quantum circuits was difficult when a single circuit was present with multiple other images or presented in different layout styles within the same paper.
- In several cases, the caption described a quantum circuit, but the actual figure showed a graph, plot, or flowchart related to quantum experimental results rather than a circuit diagram.
- Distinguishing quantum circuits from classical or electrical circuits was challenging because both often use some similar terms and diagram structures.
- Extracting quantum gate names from circuit figures was difficult, as some circuits do not explicitly label all gates or use multiple types of symbols.
- Identifying the quantum problem associated with a circuit was also challenging because many circuit figures do not mention the problem name in the caption or figure.

4 Methodology

This section describes the methodology used to construct a dataset of quantum circuit figures from scientific papers.

4.1 Overview of the Pipeline:

The pipeline processes quantum physics research papers one by one to build a dataset of quantum circuit figures. Papers are taken from a predefined list and processed sequentially until the required number of quantum circuit images is collected.

For each paper, the PDF is downloaded and all figures are extracted and saved as PNG images. If a figure has an explicit figure number in the document, that number is preserved. When a figure does not have a clear number, a logical internal number is assigned to ensure consistent identification. Caption text is collected for every figure; if a caption is missing in some special case, the nearest text below the figure is used instead.

Each figure, together with its caption, is then analyzed using a multi-stage classification process to determine whether it represents a quantum circuit diagram. Only figures that are confidently identified as quantum circuits are included in the dataset.

For the accepted circuit figures, relevant metadata such as quantum gate names and the associated quantum problem, when available, is extracted and stored. The final output consists of a folder containing the circuit images and a single JSON file containing the dataset metadata.

4.2 Paper Collection and Controlled Processing :

The pipeline starts by reading a fixed list of arXiv paper IDs provided as input. The papers are processed one after another in the same order as they appear in the list, which helps keep the process consistent and reproducible. Each paper is downloaded from arXiv as a PDF file and saved locally using a clear and consistent file naming scheme.

To keep the downloading process stable and avoid putting too much load on the server, a delay of 10 seconds is added between consecutive download requests. When a PDF has already been downloaded in an earlier run, it is reused directly instead of downloading it again.

During processing, the pipeline keeps track of how many quantum circuit figures have been identified from each paper. The pipeline stops automatically once the target number of quantum circuit images is reached, even if there are remaining papers in the list. This controlled processing ensures that the dataset size is well defined and that all results are reproducible across multiple runs.

Design Principles

The proposed pipeline is designed to be

- **Conservative**, prioritizing precision to minimize false positives;
- **Interpretable**, relying on rule-based and explainable evidence at each stage;
- **Reproducible**, using fixed thresholds and zero-shot pretrained models without task-specific training.

4.3 Figure Extraction:

Figure extraction is performed using Docling[1], which provides layout-aware processing for scientific PDF documents. This tool is used because figures in research papers are often not stored as single image objects. Instead, they are composed of multiple elements such as vector graphics, raster images, and text annotations, which are difficult to extract correctly using standard PDF image extraction methods.

Each PDF is first converted into a structured document representation using Docling. During this conversion, the document is analyzed page by page to identify high-level layout elements, including text blocks and picture regions. Figure regions are detected based on their visual layout and bounding box information rather than relying only on embedded image objects. For every detected figure region, Docling provides the page number and the bounding box coordinates that describe the figure's location on the page. These bounding boxes are then used to render the full figure region directly from the PDF page. Rendering the figure region instead of extracting individual PDF objects ensures that all visual components of the figure such as vector lines, symbols, and overlaid text are preserved in a single PNG image. This is especially important for quantum circuit diagrams, which are commonly drawn using vector graphics.

Very small extracted images are filtered out based on their size, as these usually correspond to icons or decorative elements rather than meaningful scientific figures. This step reduces noise and prevents irrelevant images from being passed to later stages of the pipeline.

4.4 Caption Extraction:

Caption handling and figure indexing require precise spatial information that is not fully available through layout extraction alone. For this reason, PyMuPDF (fitz) is used alongside Docling to access low-level page geometry. PyMuPDF provides direct access to page coordinate systems and bounding boxes of text blocks and graphical elements, which allows accurate spatial reasoning at the page level.

For each figure, the caption text is taken from the document when it is clearly available. If a figure does not have a caption, the text that appears directly below the figure is used instead. Only text that is spatially close to the figure is considered, so that unrelated content from other parts of the page is not included. By combining Docling for layout-aware figure detection with PyMuPDF for precise page-level geometry, the pipeline achieves reliable caption association and consistent figure indexing across different document formats and layouts.

4.5 Quantum Circuit Identification:

4.5.1 Stage 0: Geometric Wire-Based Early Filtering

The first stage reduces the number of figures passed to later stages by filtering out obvious non-circuit images, such as different types of plots, graphs, and charts, at an early point in the pipeline.

Stage 0 performs an early structural check to remove figures that cannot represent quantum circuit diagrams. This stage is based on the observation that quantum circuits consistently contain multiple horizontal wires corresponding to qubit lines.

Each figure image is processed using OpenCV-based image processing. The image is converted to grayscale, and Canny edge detection is applied to highlight strong edges. Detected edges are then passed to a probabilistic Hough Line Transform (HoughLinesP) to identify straight line segments. Only near-horizontal lines are retained based on their orientation, and short or noisy segments are removed using a minimum length constraint relative to the image width. The remaining horizontal line segments are counted to assess circuit-like structure.

If the number of detected horizontal wires is below a fixed threshold of three, the figure is immediately rejected and excluded from further processing. This threshold was chosen empirically based on inspection of quantum circuit diagrams in the dataset, where even simple circuits typically contain multiple parallel qubit lines, while plots and charts rarely contain more than one or two long horizontal segments. Figures that meet or exceed this threshold are forwarded to subsequent stages for OCR, text analysis, and embedding-based reasoning. All decisions at this stage are logged for monitoring and later analysis.

This stage provides a model-free, geometry-based filter that leverages domain-specific structure rather than learned visual features, ensuring robust early rejection of non-circuit figures.

(**Implemented in code**: count_wires() in main_classifier.py (Class: HorizontalWireFilter))

tikz

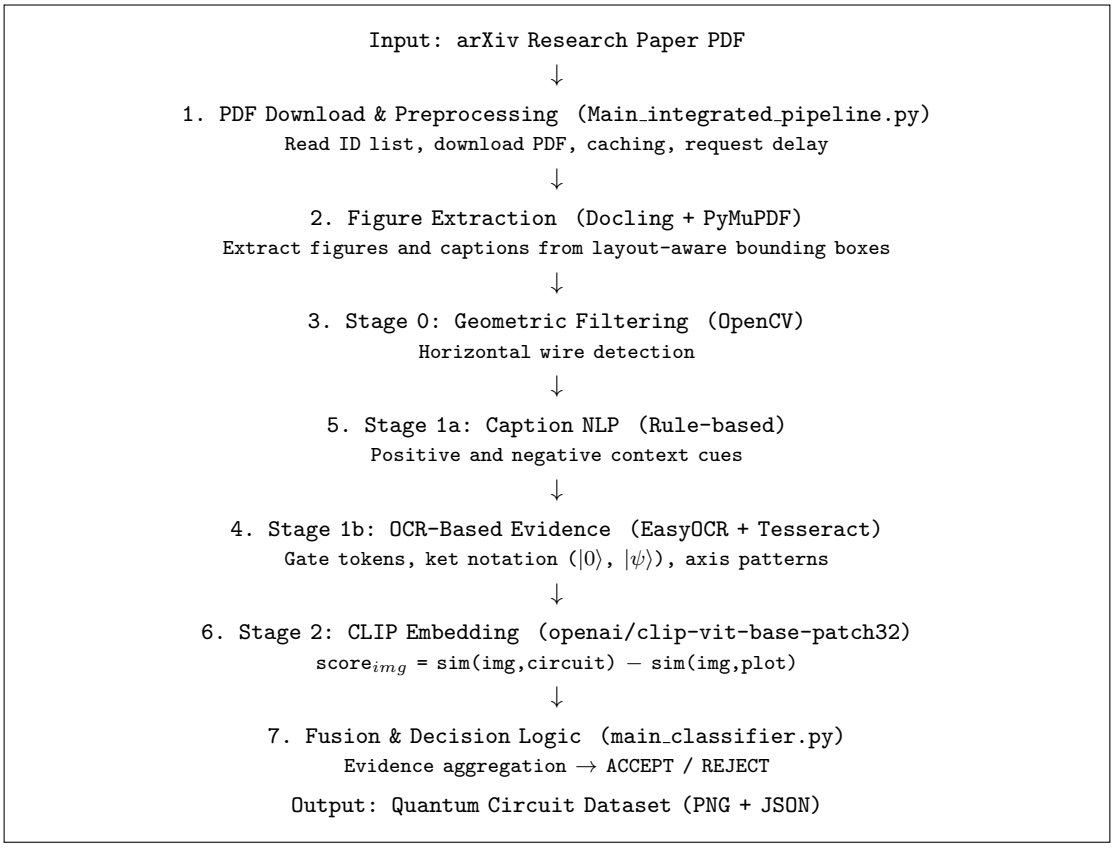

Figure 1: Dataset compilation pipeline for quantum circuit figure extraction and filtering.

4.5.2 Stage 1a: Caption-Based Text Analysis

Stage 1a applies a rule-based, lexicon-driven NLP approach to extract semantic evidence from figure captions. This method is chosen instead of a trained language model to ensure interpretability, reproducibility, and precise control, given that scientific captions are short, technical, and often ambiguous, and no labeled caption dataset is available.

Caption text is first normalized using basic text preprocessing (lowercasing). The primary NLP technique used is keyword and phrase matching, implemented through curated domain-

specific lexicons. Phrase-level matching is applied to detect circuit-related expressions such as quantum circuit, circuit diagram, gate sequence, ansatz, qubit, and measurement. In addition, token-level pattern matching using regular expressions is used to detect explicit quantum gate names (e.g., CNOT, CX, RX, RY, RZ, U1, U2, U3), with word-boundary constraints to avoid partial or spurious matches.

To counterbalance positive signals, negative keyword matching is applied to identify language commonly associated with plots, numerical results, or experimental evaluation (e.g., plot, graph, histogram, fidelity, error rate, benchmark, data points). A separate negative lexicon targets block-diagram and schematic terminology (e.g., architecture, pipeline, workflow), which often appears in figures that visually resemble circuits but do not represent gate-level diagrams.

Detected signals are aggregated using a heuristic scoring scheme rather than a binary classifier. When strong negative lexical evidence is present in the absence of gate tokens, the caption is marked as negative context. This flag is later used as a strict rejection condition during decision fusion.

Overall, this stage uses rule-based NLP with lexicon matching and regular-expression token detection[2], providing structured and interpretable textual evidence that complements OCR-based visual signals and embedding-based visual similarity in the final classification.

(**Implemented in code**: analyze() in mai_classifier.py (Class: TextJudge))

4.5.3 Stage 1b: OCR-Based Visual Text Evidence

Stage 1a analyzes text that is visually embedded inside the figure using optical character recognition (OCR)[3]. This stage aims to detect direct visual evidence of quantum circuits and to identify figures that clearly represent plots or charts.

OCR is performed using a combined approach with EasyOCR and Tesseract. EasyOCR is used as the main engine due to its robustness on scientific figures, while Tesseract serves as a fallback to improve recognition of small or low-contrast text. The extracted text is normalized before analysis.

Two types of evidence are evaluated:

Quantum circuit evidence:

- The OCR text is searched for explicit quantum gate labels such as H, X, CX, CNOT, RX, RY, RZ, U1, U2, U3, and for ket notation like $|0\rangle$ or $|\psi\rangle$.
- If at least one valid gate label is detected, the figure is immediately accepted as a quantum circuit, since such labels provide strong and unambiguous visual evidence.

Plot-style evidence:

- The presence of axis-related terms (e.g., axis, Hz, ms, time) together with a high number of numeric values (more than 10) is used to identify plot-like figures.
- If these indicators appear without any quantum notation, the figure is immediately rejected.

Figures that do not clearly satisfy either condition are forwarded to later stages for caption-based and embedding-based analysis. All decisions from this stage are logged for monitoring and error analysis.

(**Implemented in code**:analyze() in main_classifier.py (Class: OCRJudge))

4.5.4 Stage 2: Embedding-Based Visual and Textual Reasoning (CLIP)

SStage 2 performs high-level semantic reasoning using cross-modal image–text embeddings to handle figures that remain ambiguous after geometric filtering, OCR, and caption analysis. This stage uses the pretrained CLIP (Contrastive Language–Image Pretraining) model, specifically *openai/clip-vit-base-patch32*, which maps images and text into a shared embedding space, enabling direct semantic comparison between visual content and natural language descriptions. The model is applied in a zero-shot setting, without task-specific training or fine-tuning, allowing semantic

similarity to be captured without relying on explicit structural rules or keyword matching and ensuring reproducibility across documents.

Image embedding: For each extracted figure, an image embedding is computed using the CLIP image encoder[4]. The resulting embedding is L2-normalized to enable cosine similarity comparison. Two fixed prototype text prompts are defined: one representing the concept of a quantum circuit diagram (e.g., a diagram containing qubits, gates, and measurements), and one representing a scientific plot or chart (e.g., a graph with axes and data points). These prototype prompts are encoded once using the CLIP text encoder and reused across all figures[5].

Visual similarity is computed by measuring the cosine similarity between the image embedding and each prototype text embedding. The final visual score is defined as

$$\text{score_img} = \text{sim}(\text{img}, \text{circuit}) - \text{sim}(\text{img}, \text{plot}),$$

where a positive value indicates that the image is semantically closer to a quantum circuit, while a negative value indicates stronger similarity to a plot or chart.

Caption text embedding: In addition to image embeddings, Stage 2 encodes the figure caption using the CLIP text encoder to obtain a semantic text embedding in the same shared embedding space as the image. The caption embedding is compared against the quantum-circuit prototype embedding using cosine similarity, producing a caption similarity score.

This caption-based score is used only as supporting semantic evidence during fusion and is not treated as a standalone decision signal, since captions often describe results or experimental observations rather than the circuit diagram itself. Stage 2 therefore provides a semantic similarity signal that complements OCR-based visual text evidence and caption-level NLP, with final decisions deferred to the fusion stage. The zero-shot CLIP design with fixed prototype prompts ensures robustness to visual style variation while maintaining full reproducibility.

(**Implemented in code** : analyze() in main_classifier.py (Class: EmbeddingJudge))

4.5.5 Fusion and Final Decision Logic

The fusion stage combines evidence from OCR-based visual text analysis, caption-level NLP, and CLIP-based semantic similarity to produce the final decision. No single stage independently determines the outcome, except for explicit early rejections or OCR-based short-circuit acceptance.

A strict negative-context rule is applied first to reject figures whose captions strongly indicate plots, schematics, or experimental setups without gate-level evidence. For example, captions dominated by terms such as "error rate", "measurement results", "accuracy curve", or "experimental setup" are rejected unless strong visual gate evidence is present.

or the remaining figures, the CLIP image similarity score is evaluated. If the score is clearly positive (for example, greater than +0.15), the image is considered semantically closer to a quantum circuit and is accepted, provided there is no strong negative caption evidence. If the score is clearly negative (for example, less than 0.15), the image is rejected as being more similar to a scientific plot.

Intermediate cases, where the score lies in a small margin around zero (approximately between 0.15 and +0.15), are resolved by checking consistency with OCR and caption-based signals. For instance, an image with a CLIP score of +0.08 may still be accepted if OCR detects multiple gate tokens such as H, CX, or RZ, and the caption contains circuit-related terms like "quantum gate" or "qubit register". Conversely, an image with a CLIP score of +0.05 but containing many axis labels and numeric values detected by OCR is rejected.

When evidence remains insufficient or conflicting across stages, the figure is conservatively rejected. This fusion strategy prioritizes precision over recall and ensures that accepted figures are strongly supported by multiple independent signals, reducing the risk of including non-circuit figures in the final dataset.

(**Implemented in code**: classify() in main_classifier.py (Class: QASMClassifier))

Table 1: Responsibilities and decision roles of each pipeline stage

Stage	Purpose	Decision Role
Stage 0	Geometric filtering based on horizontal wire structure	Hard reject
Stage 1a	Caption-based semantic text analysis	Hard reject (fail-fast)
Stage 1b	Visual text evidence via OCR	Hard accept / hard reject
Stage 2	Cross-modal semantic similarity (CLIP)	Evidence only
Fusion	Multi-signal evidence aggregation	Final decision

5 Metadata Retrivel :

For each extracted figure, metadata is stored as a JSON object. Each field in the metadata is generated using a specific method and serves a defined purpose in ensuring traceability, reproducibility, and downstream usability of the dataset. The following describes the origin and extraction logic for each metadata field.

5.0.1 arXiv id

- The arXiv identifier stores the ID of the source paper from which the figure was extracted.
- It is taken directly from the input arXiv ID list and allows each figure to be traced back to its original publication for reproducibility and verification.

5.0.2 Page Number

- The page number field records the position of the figure within the source PDF document.
- When Docling provides a reliable page index during figure extraction, this value is stored directly as a positive integer (e.g., page 3, page 7).

5.0.3 Figure Number

- The *figure number* records the identifier used within the source document to reference a figure. When an explicit figure number is available during figure extraction, this value is stored as the actual number used in the paper.
- In some special cases, figures do not have an explicit or reliably extractable figure number. Since the metadata schema allows only integer values, such figures are assigned sequential negative identifiers (e.g., -1, -2, -3) based on their order of extraction within the document. This convention ensures that every figure has a unique and stable identifier while clearly distinguishing inferred numbering from document-provided figure numbers.

5.0.4 Text Positions

- The text positions field stores the token-level location of descriptive text (such as captions) within the full extracted PDF text. A token refers to a word obtained by whitespace splitting, following Python's split() convention.
- For each description string, the full document text from all pages is tokenized and concatenated into a single global token sequence. The position of the description is stored as a tuple: (start_token_index,end_token_index)
- where indexing starts at zero and the end index is inclusive.

- Because exact string matching is unreliable for PDF text, an anchor-based matching strategy is used. The code searches for the first tokens of the description using progressively shorter anchors until a match is found in the global token sequence. Once the start index is identified, the end index is computed from the length of the description.
- This approach is robust to line breaks, punctuation changes, and formatting noise introduced during PDF text extraction, while still providing a precise and reproducible alignment between figure descriptions and document text.

5.0.5 Quantum Gates

The quantum gates field contains a list of gate names identified for a given figure using a multi-source extraction strategy designed to maximize robustness.

Gate names are detected using three complementary methods:

- OCR-based visual detection

Optical character recognition is applied directly to the figure image to detect gate labels that appear inside the circuit diagram. Typical examples include:H, X, Y, Z,CX, CNOT,RX, RY, RZ

These detections provide strong evidence, since gate labels embedded in the image are rarely ambiguous.

- Caption-based text analysis

Rule-based NLP is applied to the figure caption and nearby descriptive text. Gate names are detected using token-level matching with strict boundary constraints, ensuring that partial matches inside longer words are avoided.

- Embedding-based semantic matching

In cases where gate information is described indirectly (e.g., "rotation gate" instead of "RZ"), embedding-based similarity matching is used to recover gate-related concepts that do not appear as exact tokens.

The final list of quantum gates is formed by taking the union of all detected gate names across these sources. Duplicate entries are removed, and the list contains only normalized gate identifiers.

5.0.6 Quantum Problem

- The quantum problem is extracted only from textual information, not from the image itself.
- First, the figure caption is analyzed. If the caption contains an explicit name or abbreviation of a known quantum algorithm (for example VQE, QAOA, Grover, or Quantum Phase Estimation), this value is selected directly.
- If no clear match is found in the caption, than that particular fig. mention text in the document is analyzed using the same matching process for finding the Quantum problem.
- The matching is performed using a predefined list of quantum algorithms and problems, combined with case-insensitive keyword matching and semantic similarity checks to handle variations in wording and abbreviations.
- A quantum problem label is assigned only when the textual evidence is unambiguous and clearly refers to the algorithm implemented by the circuit.
- If no reliable reference is detected at any step, the field is marked as unknown, rather than guessing the problem based on circuit structure.

6 Result and Analysis

6.1 Dataset Outcome and Sparsity of the Task

The target size of the dataset was 250 quantum circuit images. To reach this number, 1,496 arXiv papers from the *quant-ph* category were processed in the fixed order specified by the exam ID list.

A central observation is the strong sparsity of quantum circuit diagrams in scientific publications. The majority of processed papers did not contain any circuit-level figures and instead focused on theoretical analysis or experimental results presented as plots and tables. This confirms that identifying quantum circuit diagrams is primarily a selective retrieval task rather than a straightforward image extraction problem.

This sparsity motivates the use of a precision-oriented, low-recall design. Relevant figures appear infrequently and are embedded among many visually complex but unrelated figures. In this setting, incorrectly accepting non-circuit images is more harmful than rejecting uncertain cases. Manual inspection of the final dataset shows that approximately 190 of the 250 collected images are valid quantum circuit diagrams, while most remaining images correspond to classical electrical circuits, which represent the most frequent source of false positives due to strong visual and terminological overlap.

Overall, the results indicate that automated dataset construction for quantum circuit images is feasible, but requires conservative filtering and large-scale paper processing to achieve acceptable quality.

6.2 Threshold design and failure criteria

The pipeline uses a small set of global thresholds to make decisions in a consistent and reproducible way. These thresholds define clear failure criteria (when to reject) and clear acceptance criteria (when evidence is strong). They were selected through an iterative process: first, the pipeline was run on many papers; then, accepted/rejected figures were inspected in monitoring folders; finally, thresholds were tightened until common false positives were reduced while keeping clear circuit examples.

Why threshold-based rules necessary? In the context of this task, Without ground-truth labels, the safest strategy is to avoid "soft" decisions. Scientific figures include many visually similar types (plots, block diagrams, electrical circuits, pulse sequences). A single weak signal is not reliable. Thresholds make the decision logic explicit, testable, and reproducible.

Key thresholds and how they work

1. **Geometric threshold (horizontal wires)**
   - **Rule:** Reject the figure if the number of detected horizontal wires is fewer than two.
   - **Rationale:** Quantum circuit diagrams almost always contain multiple parallel rails representing qubit wires. Many non-circuit figures (such as plots, tables, or block diagrams) do not exhibit this structural pattern.
   - **Failure criteria prevented:** Accepting structured diagrams that lack true circuit rails.
2. **CLIP similarity threshold (semantic separation)**
   - **Rule:** Reject the figure if the CLIP image similarity score is below 0.25, including borderline values such as 0.24.
   - **Rationale:** CLIP scores near the decision boundary are unstable and often correspond to visually structured but semantically non-circuit figures. A strict cutoff reduces ambiguity and improves robustness.
   - **Failure criteria prevented:** Accepting block diagrams or classical electrical circuits that appear circuit-like but are semantically closer to non-circuit prototypes.
3. **OCR short-circuit acceptance (strong positive evidence)**

- **Rule:** Accept the figure immediately if OCR detects at least one valid quantum gate token (e.g., `H`, `X`, `CX/CNOT`, `RX/RY/RZ`, `U1/U2/U3`) within the image.
- **Rationale:** Gate labels embedded directly in the figure provide strong, high-confidence evidence of a quantum circuit. In contrast, plots and block diagrams rarely contain these tokens in a circuit-specific context.
- **Failure criteria prevented:** Rejecting true circuit diagrams when semantic similarity is weak but explicit gate-level evidence is present.

4. **Caption-based hard rejection (negative context)**

   - **Rule:** Reject the figure immediately when the caption contains strong non-circuit indicators (e.g., performance metrics or error rates), especially when gate-level evidence is absent.
   - **Rationale:** Many `quant-ph` papers include evaluation figures whose captions clearly signal result reporting (such as curves, metrics, or comparative analyses). Accepting such figures would introduce plots into the circuit dataset.
   - **Failure criteria prevented:** Accepting result plots that appear near circuit discussions but are not circuit diagrams themselves.

The caption term logic is treated as a global constraint, not as a paper-specific trick. It works because figure captions are written to explain the figure's purpose. When a caption uses consistent "result/reporting" language (e.g., performance metrics) or "non-circuit" language (architecture-style descriptions), this provides a strong semantic signal that complements visual analysis. The pipeline does not rely on keywords alone; instead, keywords function as a conservative veto unless strong circuit evidence (such as OCR gate tokens) exists. This design reduces false positives while still allowing genuine circuit figures to pass when multiple signals agree.

These thresholds implement a conservative principle: high-confidence acceptance requires strong evidence, while ambiguous cases are rejected. This is appropriate for automated dataset creation because a small number of false positives can "poison" the dataset and harm downstream training, whereas false negatives only reduce dataset size and can be compensated by processing more papers. The result is a robust and reproducible decision policy that scales to larger collections without manual intervention.

6.3 Error Analysis and Observed Failure Cases

A first recurring failure case involves block diagrams. These figures often contain boxes and arrows arranged in structured sequences, which can appear circuit-like to embedding-based models.Embedding models prioritize abstract geometric patterns over semantic meaning, and since both diagrams use interconnected boxes and linear paths to represent flow, they become semantically indistinguishable in a compressed feature space. This mismatch explains hints purely visual reasoning fails. Caption terms such as "architecture," "pipeline," "framework," "workflow," and "block diagram" reliably indicate this semantic intent and are therefore used as rejection signals.

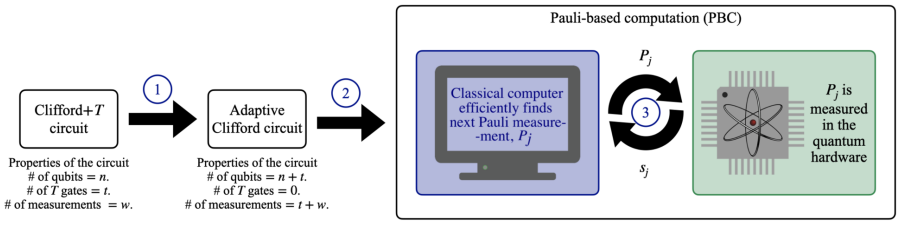

Figure 2: Enter Caption arXiv id: 2408.04007

A second failure case is related to pulse control and spectroscopy diagrams. These figures often contain multiple parallel horizontal lines that visually resemble qubit wires, causing geometric and

$$\hat{\mathcal{H}}_M = \hat{\mathcal{H}}_0 + \hat{\mathcal{H}}_{\mathrm{tl}} + \hat{\mathcal{V}}_M \,, \tag{2}$$

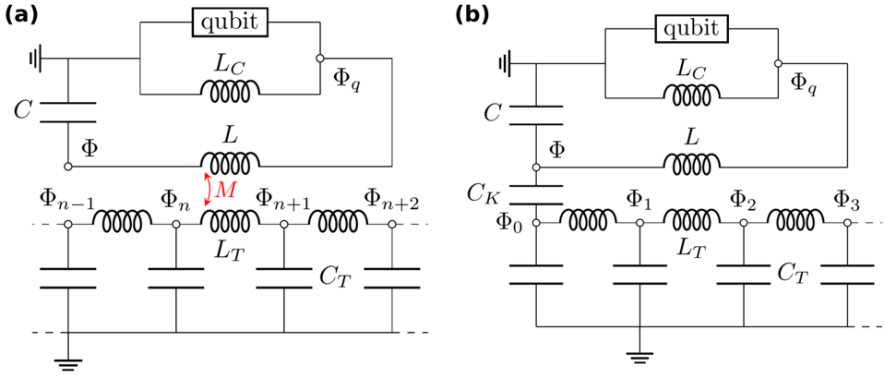

Figure 3: False Positive Electrical Circuit diagram arXiv id: 2408.16558

semantic stages to activate. The failure occurs because these diagrams represent physical control signals (e.g., time-domain pulses or frequency sweeps) rather than logical circuits. Domain-specific caption terms such as "Rabi," "spectroscopy," "pulse," and "microwave" provide strong evidence of this distinction and are used to reject such figures even when their layout appears circuit-like.

The most challenging and frequent source of false positives consists of classical electrical circuit diagrams. These figures often share both visual structure and terminology with quantum circuits. They contain wires, gate-like symbols, and component labels, and their captions may include terms such as circuit, gate, or control, which are not exclusive to quantum computing. In these cases, neither geometric filtering nor keyword-based rejection provides a fully reliable distinction. As a result, some electrical circuits are accepted despite not representing quantum operations.

To limit this issue, the pipeline requires explicit quantum-specific evidence for acceptance, such as the presence of quantum gate labels (e.g., H, CX, RZ) or quantum state notation (e.g., $|0\rangle$, $|\psi\rangle$). However, when electrical circuits are described using abstract or gate-like terminology and lack clear classical indicators, this distinction remains ambiguous. This limitation reflects a fundamental overlap between classical and quantum schematic representations rather than a flaw in the pipeline design.

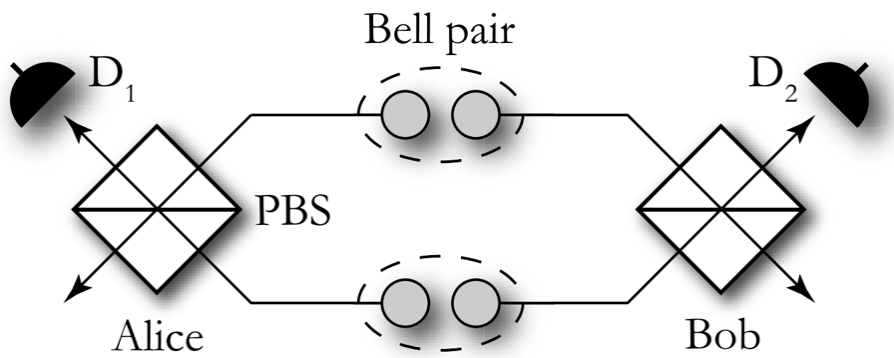

Figure 4: False Positive arXiv id: 2501.12107

A further failure category consists of performance plots and experimental result figures. These figures may appear near circuit discussions and sometimes reference circuit components in their captions. While keywords such as error rate, fidelity, performance, and accuracy are generally reliable indicators of result-focused figures, plots that use neutral or generic captions can still

bypass early rejection stages.

The selection of rejection terms and thresholds was guided by iterative inspection of monitoring folders, which store both accepted and rejected figures. This process allowed the identification of systematic error patterns and informed the design of global mitigation rules. Nevertheless, some ambiguous cases remain unavoidable without supervised learning or explicit domain annotation.In a highly specific domain like quantum computing,even a small number of false positives can "poison" the dataset and harm downstream tasks hence it is important to deal hard negative cases well.This is a necessary improvement in the future to create a more robust prototypical dataset.

7 Conclusion

This project examined the feasibility of automatically compiling a dataset of quantum circuit images and descriptive text from scientific publications. A multi-stage and fully reproducible pipeline was developed that combines layout-aware figure extraction with geometric analysis, OCR-based visual text detection, caption-level semantic reasoning, and embedding-based similarity scoring. Conservative thresholds and explicit decision rules were used throughout to prioritize dataset correctness and to limit the inclusion of non-circuit figures in the absence of ground-truth annotations.

The study highlights that quantum circuit diagrams are sparse and often difficult to distinguish from other schematic figures, such as block diagrams, pulse control schematics, performance plots, and classical electrical circuits. Some ambiguities remain unavoidable due to overlapping visual structure and terminology, especially for electrical circuit diagrams. Nevertheless, the proposed method demonstrates that a clean and usable prototypical dataset can be constructed using automated and generalizable techniques. The approach provides a practical foundation for future large-scale dataset collection and for the specialization of image-to-text models in the domain of quantum computing.

References

[1] M. Li et al., *Docbank: A benchmark dataset for document layout analysis*, 2020. arXiv: 2006.01038 [cs.CL]. [Online]. Available: https://arxiv.org/abs/2006.01038.

[2] D. Jurafsky and J. H. Martin, *Speech and Language Processing: An Introduction to Natural Language Processing, Computational Linguistics, and Speech Recognition, with Language Models*, 3rd. 2025, Online manuscript released August 24, 2025. [Online]. Available: https://web.stanford.edu/~jurafsky/slp3/.

[3] Y. Baek, B. Lee, D. Han, S. Yun, and H. Lee, *Character region awareness for text detection*, 2019. arXiv: 1904.01941 [cs.CV]. [Online]. Available: https://arxiv.org/abs/1904.01941.

[4] F.-L. Chen et al., "Vlp: A survey on vision-language pre-training," *Machine Intelligence Research*, vol. 20, no. 1, pp. 38–56, Jan. 2023, ISSN: 2731-5398. DOI: 10.1007/s11633-022-1369-5. [Online]. Available: http://dx.doi.org/10.1007/s11633-022-1369-5.

[5] A. Radford et al., *Learning transferable visual models from natural language supervision*, 2021. arXiv: 2103.00020 [cs.CV]. [Online]. Available: https://arxiv.org/abs/2103.00020.

Note : This project leveraged AI-assisted development for code optimization and linguistic refinement. All technical decisions, model thresholding, and final dataset validations were performed by the author to ensure the integrity and accuracy of the results.