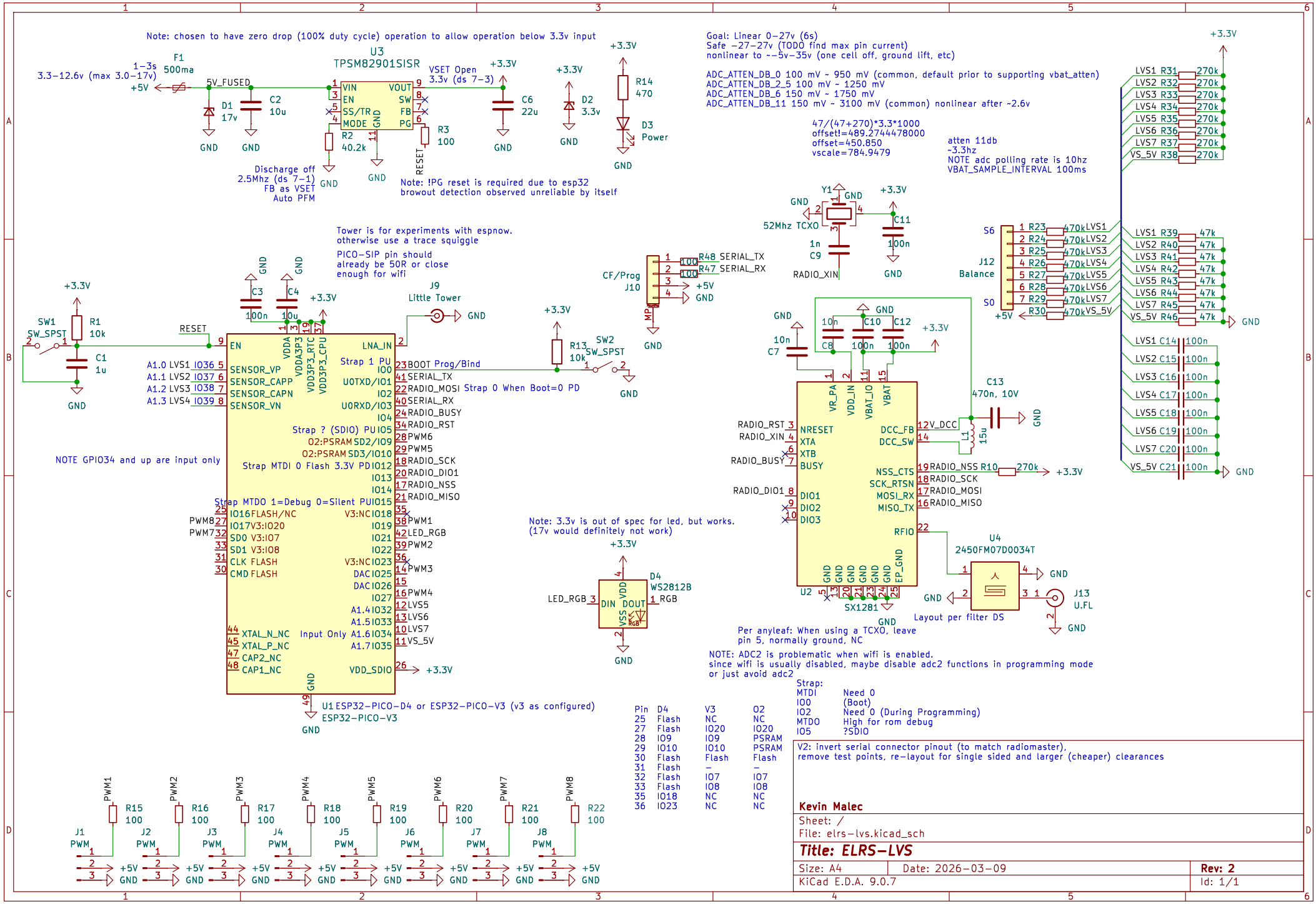
Note: chosen to have zero drop (100% duty cycle) operation to allow operation below 3.3v input
3.3-12.6v (max 3.0-17v)
+5V
F1
1-3s
500ma
5V_FUSED
D1
17v
C2
10u
GND
U3
TPSM82901SISR
VIN
EN
SS/TR
MODE
GND
VOUT
SW
FB
PG
VSET Open
3.3v (ds 7-3)
+3.3V
C6
22u
R2
40.2k
R3
100
RESET
Discharge off
2.5Mhz (ds 7-1)
FB as VSET
Auto PFM
Note: !PG reset is required due to esp32
browout detection observed unreliable by itself
D2
3.3v
R14
470
D3
Power
Goal: Linear 0-27v (6s)
Safe -27-27v (TODO find max pin current)
nonlinear to ~-5v-35v (one cell off, ground lift, etc)
ADC_ATTEN_DB_0 100 mV ~ 950 mV (common, default prior to supporting vbat_atten)
ADC_ATTEN_DB_2_5 100 mV ~ 1250 mV
ADC_ATTEN_DB_6 150 mV ~ 1750 mV
ADC_ATTEN_DB_11 150 mV ~ 3100 mV (common) nonlinear after ~2.6v
47/(47+270)*3.3*1000
offset!=489.2744478000
offset=450.850
vscale=784.9479
atten 11db
~3.3hz
NOTE adc polling rate is 10hz
VBAT_SAMPLE_INTERVAL 100ms
LVS1 R31 270k
LVS2 R32 270k
LVS3 R33 270k
LVS4 R34 270k
LVS5 R35 270k
LVS6 R36 270k
LVS7 R37 270k
VS_5V R38 270k
Y1
52Mhz TCXO
1n
C9
RADIO_XIN
C11
100n
S6
J12
Balance
S0
R23 470k LVS1
R24 470k LVS2
R25 470k LVS3
R26 470k LVS4
R27 470k LVS5
R28 470k LVS6
R29 470k LVS7
R30 470k VS_5V
LVS1 R39 47k
LVS2 R40 47k
LVS3 R41 47k
LVS4 R42 47k
LVS5 R43 47k
LVS6 R44 47k
LVS7 R45 47k
VS_5V R46 47k
LVS1 C14 100n
LVS2 C15 100n
LVS3 C16 100n
LVS4 C17 100n
LVS5 C18 100n
LVS6 C19 100n
LVS7 C20 100n
VS_5V C21 100n
Tower is for experiments with espnow.
otherwise use a trace squiggle
PICO-SIP pin should
already be 50R or close
enough for wifi
C3
100n
C4
10u
J9
Little Tower
SW1
SW_SPST
R1
10k
C1
1u
RESET
CF/Prog
J10
R48 SERIAL_TX
R47 SERIAL_RX
MP
R13
10k
SW2
SW_SPST
EN
VDDA
VDDA3P3
VDD3P3_RTC
VDD3P3_CPU
LNA_IN
A1.0 LVS1 IO36
A1.1 LVS2 IO37
A1.2 LVS3 IO38
A1.3 LVS4 IO39
SENSOR_VP
SENSOR_CAPP
SENSOR_CAPN
SENSOR_VN
Strap 1 PU
IO0
U0TXD/IO1
IO2
U0RXD/IO3
IO4
Strap ? (SDIO) PU IO5
O2:PSRAM SD2/IO9
O2:PSRAM SD3/IO10
Strap MTDI 0 Flash 3.3V PD IO12
IO13
IO14
Strap MTDO 1=Debug 0=Silent PU IO15
IO16 FLASH/NC
IO17 V3:IO20
SD0 V3:IO7
SD1 V3:IO8
CLK FLASH
CMD FLASH
V3:NC IO18
IO19
IO21
IO22
V3:NC IO23
DAC IO25
DAC IO26
IO27
A1.4 IO32
A1.5 IO33
Input Only A1.6 IO34
A1.7 IO35
XTAL_N_NC
XTAL_P_NC
CAP2_NC
CAP1_NC
VDD_SDIO
BOOT Prog/Bind
SERIAL_TX
RADIO_MOSI Strap 0 When Boot=0 PD
SERIAL_RX
RADIO_BUSY
RADIO_RST
PWM6
PWM5
RADIO_SCK
RADIO_DIO1
RADIO_NSS
RADIO_MISO
PWM1
LED_RGB
PWM2
PWM3
PWM4
LVS5
LVS6
LVS7
VS_5V
PWM8
PWM7
NOTE GPIO34 and up are input only
U1 ESP32-PICO-D4 or ESP32-PICO-V3 (v3 as configured)
ESP32-PICO-V3
Note: 3.3v is out of spec for led, but works.
(17v would definitely not work)
D4
WS2812B
LED_RGB
DIN
DOUT
VDD
VSS
RGB
10n
C7
C8
C10
C12
C13
470n, 10V
L1
15u
VR_PA
VDD_IN
VBAT_IO
VBAT
NRESET
XTA
XTB
BUSY
DIO1
DIO2
DIO3
DCC_FB
DCC_SW
V_DCC
NSS_CTS
SCK_RTSN
MOSI_RX
MISO_TX
RFIO
EP_GND
RADIO_NSS R10 270k
U2
SX1281
U4
2450FM07D0034T
Layout per filter DS
J13
U.FL
Per anyleaf: When using a TCXO, leave
pin 5, normally ground, NC
NOTE: ADC2 is problematic when wifi is enabled.
since wifi is usually disabled, maybe disable adc2 functions in programming mode
or just avoid adc2
Strap:
MTDI Need 0
IO0 (Boot)
IO2 Need 0 (During Programming)
MTDO High for rom debug
IO5 ?SDIO
Pin D4 V3 O2
25 Flash NC NC
27 Flash IO20 IO20
28 IO9 IO9 PSRAM
29 IO10 IO10 PSRAM
30 Flash Flash Flash
31 Flash - -
32 Flash IO7 IO7
33 Flash IO8 IO8
35 IO18 NC NC
36 IO23 NC NC
R15 100
R16 100
R17 100
R18 100
R19 100
R20 100
R21 100
R22 100
J1 PWM
J2 PWM
J3 PWM
J4 PWM
J5 PWM
J6 PWM
J7 PWM
J8 PWM
+5V
V2: invert serial connector pinout (to match radiomaster),
remove test points, re-layout for single sided and larger (cheaper) clearances
Kevin Malec
Sheet: /
File: elrs-lvs.kicad_sch
Title: ELRS-LVS
Size: A4
Date: 2026-03-09
Rev: 2
KiCad E.D.A. 9.0.7
Id: 1/1