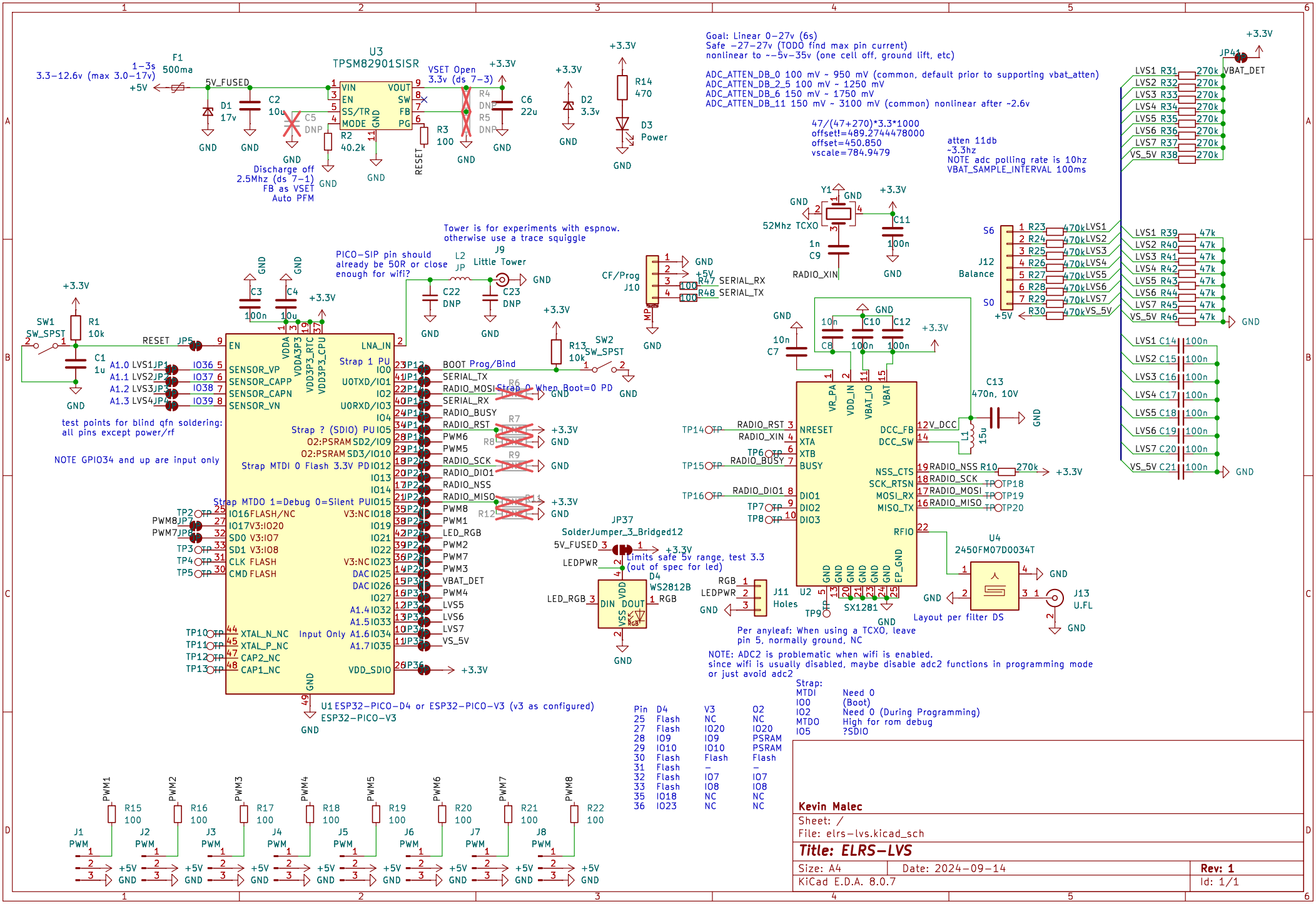

Kevin Malec

Sheet: /

File: elrs-lvs.kicad_sch

Title: ELRS-LVS

Size: A4	Date: 2024-09-14	Rev: 1
KiCad E.D.A. 8.0.7		Id: 1/1