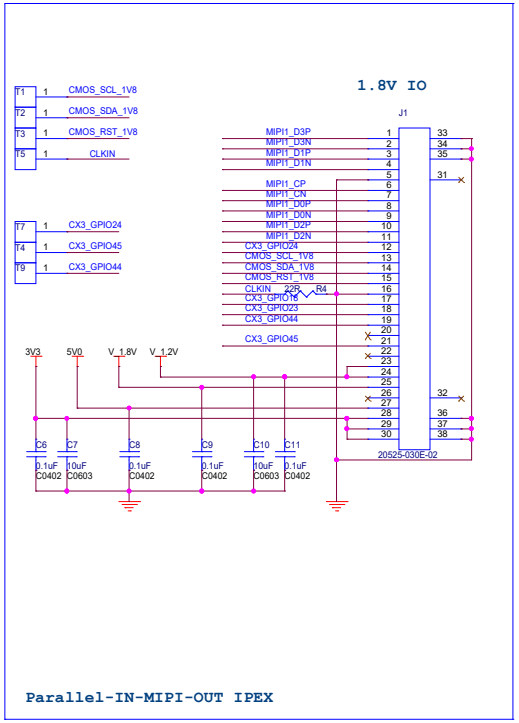

Parallel-IN-MIPI-OUT IPEX

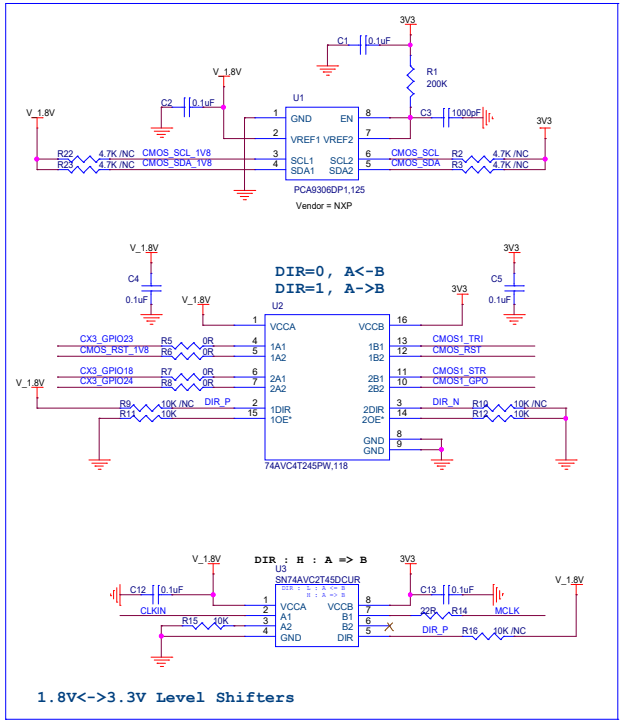

1.8V<->3.3V Level Shifters

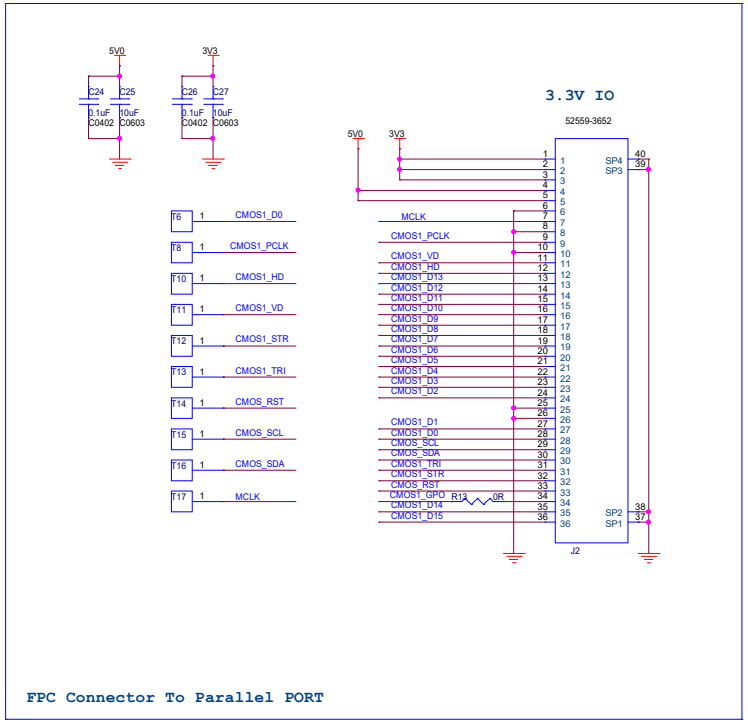

FPC Connector To Parallel PORT

MIPI <-> PARA BRIDGE

NOTES:

MSEL = 1 : J2(PARA IN) + J1(MIPI OUT); FPC CONTACTS ON SAME SIDE
MSEL = 0 : J3(MIPI IN) + J2(PARA OUT); FPC CONTACTS ON OPPOSITE SIDE

BRIDGE CHIP MODE SELECT:

SW[1:2] = ON =>=> MSEL=0 : MIPI -> PARA
SW[1:2] = OFF =>=> MSEL=1 : PARA -> MIPI

GPIO DIRECTION CONTROL LOGIC:

SW[3:4]=ON =>=> DIR_P =0 : GPIO for MIPI SENSOR
SW[3:4]=OFF=>=> DIR_P =1 : GPIO for PARA SENSOR

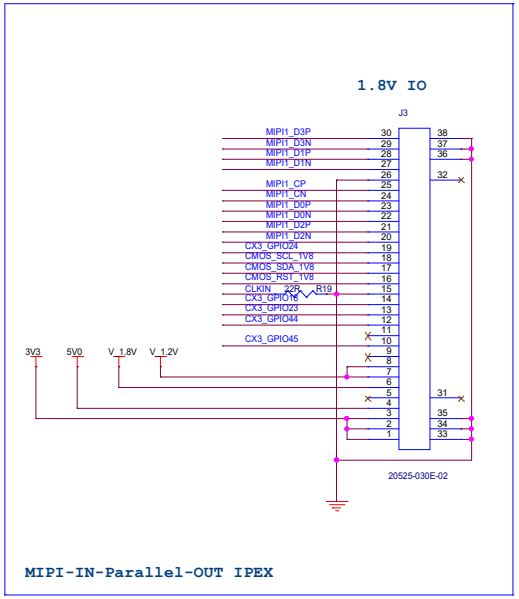

MIPI-IN-Parallel-OUT IPEX

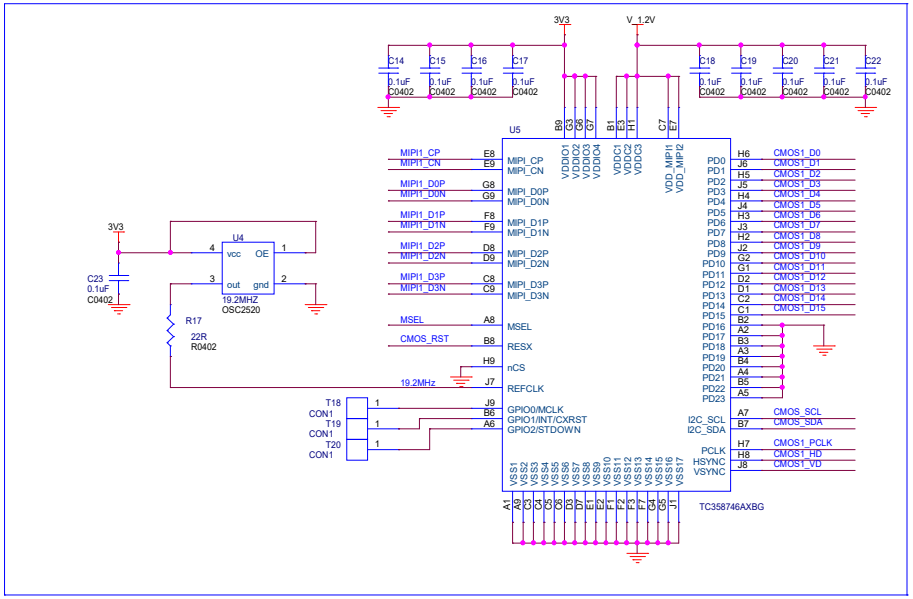

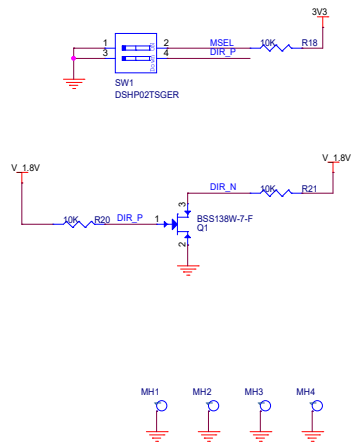

Title	AISTAR-MIPI BRIDGE		
Size C	Document Number		Rev 1.1
Date: Saturday, October 14, 2017	Sheet 1 of 1		