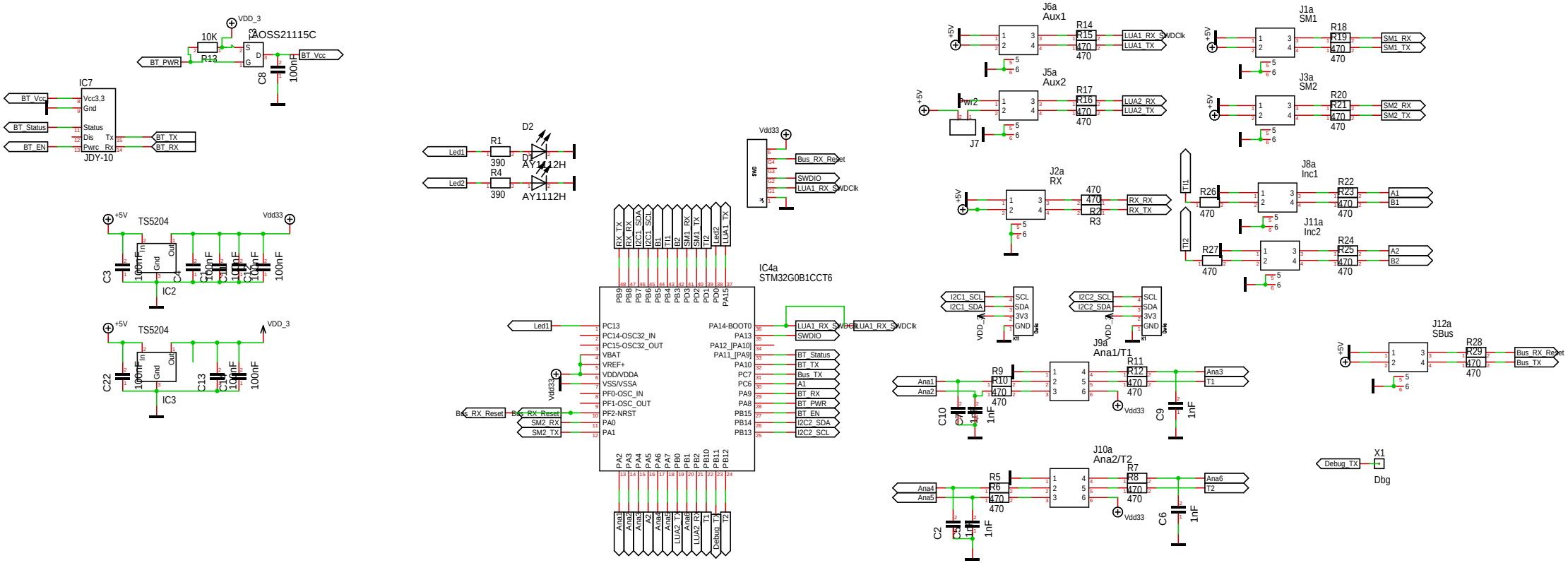
VDD_3
10K
R13
BT_PWR
C2
AOSS21115C
S
D
G
C8
100nF
BT_Vcc
IC7
Vcc3,3
Gnd
Status
Dis
Tx
Pwrc
Rx
JDY-10
BT_Status
BT_EN
BT_TX
BT_RX
TS5204
+5V
Vdd33
In
Out
Gnd
C3
100nF
C4
IC2
C22
C13
IC3
Led1
Led2
R1
390
R4
D2
D1
AY1112H
Vdd33
SWD
Bus_RX_Reset
SWDIO
LUA1_RX_SWDClk
RX_TX
RX_RX
I2C1_SDA
I2C1_SCL
B1
Tl1
B2
SM1_RX
SM1_TX
Tl2
Led2
LUA1_TX
IC4a
STM32G0B1CCT6
PB9
PB8
PB7
PB6
PB5
PB4
PB3
PD3
PD2
PD1
PD0
PA15
PC13
PC14-OSC32_IN
PC15-OSC32_OUT
VBAT
VREF+
VDD/VDDA
VSS/VSSA
PF0-OSC_IN
PF1-OSC_OUT
PF2-NRST
PA0
PA1
PA14-BOOT0
PA13
PA12_[PA10]
PA11_[PA9]
PA10
PC7
PC6
PA9
PA8
PB15
PB14
PB13
BT_Status
BT_TX
Bus_TX
A1
BT_RX
BT_PWR
BT_EN
I2C2_SDA
I2C2_SCL
SM2_RX
SM2_TX
PA2
PA3
PA4
PA5
PA6
PA7
PB0
PB1
PB2
PB10
PB11
PB12
Ana1
Ana2
Ana3
A2
Ana4
Ana5
LUA2_TX
Ana6
LUA2_RX
T1
Debug_TX
T2
J6a
Aux1
R14
R15
470
LUA1_RX_SWDClk
LUA1_TX
J5a
Aux2
Pwr2
J7
R17
R16
LUA2_RX
LUA2_TX
J2a
RX
R2
R3
RX_RX
RX_TX
J1a
SM1
R18
R19
SM1_RX
SM1_TX
J3a
SM2
R20
R21
SM2_RX
SM2_TX
J8a
Inc1
R26
R22
R23
A1
B1
J11a
Inc2
R27
R24
R25
A2
B2
I2C1_SCL
I2C1_SDA
I2C2_SCL
I2C2_SDA
SCL
SDA
3V3
GND
J9a
Ana1/T1
R9
R10
R11
R12
Ana1
Ana2
Ana3
C10
C7
1nF
C9
J10a
Ana2/T2
R5
R6
R7
R8
Ana4
Ana5
Ana6
C2
C6
J12a
SBus
R28
R29
Bus_RX_Reset
Bus_TX
Debug_TX
X1
Dbg