ENPH 455 Final Report

Designing Particle Beam Irradiation Heat Analysis Software for Paleo-detection of Dark Matter

by

Kevin Gao

A thesis submitted to the

Department of Physics, Engineering Physics, and Astronomy

in conformity with the requirements for

the degree of Bachelor of Applied Science

Queen's University

Kingston, Ontario, Canada

April 2026

Copyright © K. Gao, 2026

Abstract

Paleo-detection has emerged as a promising way to probe for dark matter by searching for nuclear recoil tracks preserved in ancient minerals, such as olivine, providing a complement to conventional direct-detection experiments. However, experiments attempting to artificially create these tracks using particle beam irradiation have not sufficiently accounted for thermal heating effects, and no specialized simulation tools currently exist for this purpose. Here, we present an open-source Python package that models particle beam heating in solids using SRIM stopping-power tables and finite volume computational methods. The software calculates energy deposition gradients and heating from various particle beam profiles and implements boundary conditions relevant to irradiation experiments. Built for modularity and accessibility, this framework enables rapid experimental design iteration and thermal modelling while avoiding the complexities of proprietary software. Comparisons with industry-standard tools recover the expected thermal behaviour and reproduce temperature profiles. Using the software, an experimental configuration for successful nuclear track production was identified: a 5 MeV, 0.2 μA, 1.5 cm × 1.5 cm proton beam incident on a 50 μm × 3 cm × 3 cm olivine sample. These findings will inform the design of an upcoming irradiation experiment at the Reactor Materials Testing Laboratory at Queen's University.

Table of Contents

Abstract i

List of Tables iv

List of Figures v

Acknowledgements vii

1 Introduction and Motivation 1

2 Background 3

3 Problem Objectives 6

3.1 Software Constraints 6

3.2 Experimental Constraints 6

4 Models 9

4.1 Heat Equation and Finite Volume Method 9

4.2 Boundary Conditions 11

4.3 Heat Generation of Particle Beam Irradiation 12

5 Methodology 14

5.1 Design Choices 14

5.2 Software Engineering 15

6 Design Validation 17

6.1 Specific Test Cases 17

6.2 Larger-Scale Benchmarks 19

7 Results 21

7.1 Experimental Setup and Mesh Grid 21

7.2 Simulation Results 23

8 Iteration, Future Work, and Limitations 27

9 Economics, EDII, and Safety 28

10 Conclusion 29

Appendix A. Statement of Work 30

Appendix B. Jupyter Notebook Tutorial 31

References 32

List of Tables

Table 1: Summary of quantitative and qualitative goals for successfully producing nuclear tracks in a sample of olivine. 8

Table 2: Short list of test programs for the simulation software, as well as which features were being tested and what benchmark was used to verify functionality. 17

List of Figures

Figure 1: Photos [12] of the mounting system on the Proton Irradiation Sample Holder. Shown is the copper heat sink and tantalum bars between which the sample is clamped. 2

Figure 2: Diagram [17] of an atom with type A inside a lattice site being dislocated into an interstitial site, resulting in a Frenkel defect..... 3

Figure 3: Diagram showing an incident particle knocking particles off their lattice sites, creating cascading collisions that heat up the surrounding area..... 4

Figure 4: Stopping power graphs [20] for protons irradiating refractory ceramic fibre at different energies. 5

Figure 5: Diagram showing a basic 3D cubic mesh for the finite volume method [27]. Each cell has faces, edges, and a node. 9

Figure 6: Diagram from [26] showing the labelling for neighbouring cell nodes and faces for a target cell P. 10

Figure 7: UML class diagram of the heat simulation software. A higher resolution version is available at [40]. 16

Figure 8: The maximum recorded temperatures as a function of (uniform) mesh size for a 5 MeV, 5 nA, 1 μm x 1 μm rectangular beam incident on a 1 μm x 1 μm x 1 μm block of olivine. Each simulation was run for 10 s with an initial time step of 0.001 s..... 18

Figure 9: Temperature [K] as a function of time [s] for a 50 MeV, 2.25 mA, 28 mm radius hydrogen particle beam shot into a 1 mm x 67 mm x 67 mm rectangular plate of eurofer98 steel. Shown in blue is the simulated value and in red is the ANSYS benchmark [47]..... 19

Figure 10: Temperature distribution shape for a 50 MeV, 2.25 mA, 28 mm radius hydrogen particle beam shot into a 1 mm x 67 mm x 67 mm rectangular plate of eurofer98 steel after 5s. Shown on the left is the simulation and on the right is the ANSYS benchmark [47]. 20

Figure 11: Diagram showing the experimental setup (PISH) for particle beam irradiation. .. 21

Figure 12: Simplified mesh design for PISH made in GMSH. The top image shows the geometry, while the bottom image shows the meshing. The sample and aluminum substrate dimensions have been scaled along the x-axis by 10^3. 22

Figure 13: Volumetric heating for a 1.5 cm x 1.5 cm, 5 MeV, 0.5 μA square beam incident on a sample of olivine and aluminum substrate. Values past the Bragg peak (~0.16 mm) are not shown since the beam energy drops to zero. 23

Figure 14: Maximum temperature [K] as a function of time [s] for a 1.5 cm x 1.5 cm, 5 MeV, 0.5 μA rectangular beam incident on an olivine sample using a simplified PISH geometry... 24
Figure 15: 3D simulation results for a 1.5 cm x 1.5 cm, 5 MeV, 0.5 μA rectangular beam incident on an olivine sample after 60 s of irradiation. 25
Figure 16: Maximum temperature [K] as a function of time [s] for a 1.5 cm x 1.5 cm, 5 MeV, 0.2 μA rectangular beam incident on an olivine sample using a simplified PISH geometry... 26
Figure 17: A snippet of one of the tutorials provided for the heat simulation software, introducing the basic classes and objects. The tutorials can be found on the GitHub [40]..... 31

Acknowledgements

I would like to express my sincere gratitude to my advisors, Professor Vincent and Professor Balogh, for their guidance over the past year and a half. Their continued support, encouragement, and understanding throughout my research and my pursuit of further education were invaluable.

I would also like to acknowledge my friend Mae Awasthy for helping create some of the figures in this report, as well as Evan Alzamora, Ronik Agrawal, and AJ Ambrozic for being significant supports during my undergraduate degree.

1 Introduction and Motivation

Dark matter has eluded physicists for decades due to its weak interactions with ordinary matter, yet there exists overwhelming observational evidence for its existence from galaxy clusters and gravitational lensing [1]. Despite this, the search for dark matter has been unsuccessful so far, leading to growing interest in alternative indirect detection methods [2]. One approach that has regained traction in the past five years is paleo-detection, which uses ancient minerals to identify traces left behind by dark matter [3]. These traces are called nuclear recoil tracks, permanent lattice defects created when particles collide with nuclei [4]. Criteria have been developed for identifying minerals that would be effective paleo-detectors, based on properties such as chemical stability, track retentivity, and geological abundance [5]. In this work, we focus specifically on olivine as a candidate material.

One major challenge lies in understanding the formation and characteristics of nuclear tracks. Most prior research has focused on studying high-energy (> 100 MeV) ion tracks [6-8], far beyond the recoil energies predicted for many dark matter candidates [3]. Additionally, recent experiments that aimed to artificially create nuclear tracks in olivine via particle beam irradiation have severely underestimated the effects of thermal heating. This has led to samples far exceeding the thermal annealing threshold, resulting in large-scale permanent damage through melting and recrystallization, or even complete sample destruction [9].

To mitigate these issues in future experiments, more careful heat transfer modelling is required. In particular, dedicated simulation tools are needed to guide the selection of beam parameters, such as incident energy and intensity, and sample dimensions. Currently, no publicly available software is specifically tailored for particle beam irradiation experiments, making the design process both tedious and complex. Thus, the primary objective of this thesis was to develop software capable of rapidly simulating the spatial and temporal temperature distribution in solid materials under particle beam irradiation.

The secondary goal was to use this tool to design an experimental setup capable of producing nuclear tracks in an olivine sample. The experiment will be conducted at the Reactor Materials Testing Laboratory (RMTL) facility at Queen's University [10]. The sample will be mounted on a large copper heat sink and secured using tantalum bars and ceramic screws. The entire

apparatus, referred to as the Proton Irradiation Sample Holder (PISH) [11], is then placed inside an ultra-high-vacuum chamber and irradiated with a proton beam. Photos of the sample mounting system are shown in Figure 1, and a detailed description of the apparatus can be found in [12].

Figure 1: Photos [12] of the mounting system on the Proton Irradiation Sample Holder. Shown is the copper heat sink and tantalum bars between which the sample is clamped.

2 Background

Crystalline materials are solids in which atoms are arranged in a regular, periodic pattern that extends throughout the entire structure [13], forming minerals such as olivine and mica [14]. This pattern is organized by a lattice, a geometric framework of repeating points that defines how atoms are positioned in the crystal. Defects can occur when atoms are displaced from their lattice sites [15]. In the case of radiation-induced defects, an incoming particle travels through the crystal structure while transferring energy. The nuclei then recoil backwards, which, at sufficiently high momentum transfer, can permanently dislodge the atom [16]. This can lead to a vacancy where the atom is displaced in between lattice sites (interstitial), called a Frenkel defect, shown below in Figure 2.

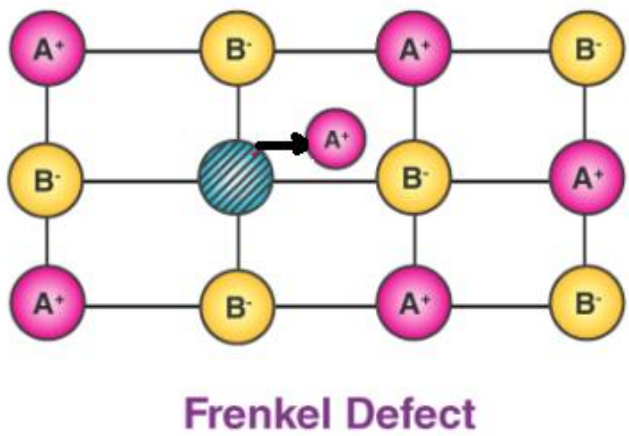

Figure 2: Diagram [17] of an atom with type A inside a lattice site being dislocated into an interstitial site, resulting in a Frenkel defect.

The first nucleus hit by an incoming particle is called the primary knock-on atom (PKA). The recoiling PKA can strike another atom and transfer energy; that atom can in turn strike another, and so on. This results in a cascade of collisions that eventually stops when the transferred energy is below the displacement threshold energy. This is the primary mechanism behind nuclear track formation. Additionally, macroscopic heating occurs due to the kinetic energy of these collisions. This process is shown below in Figure 3.

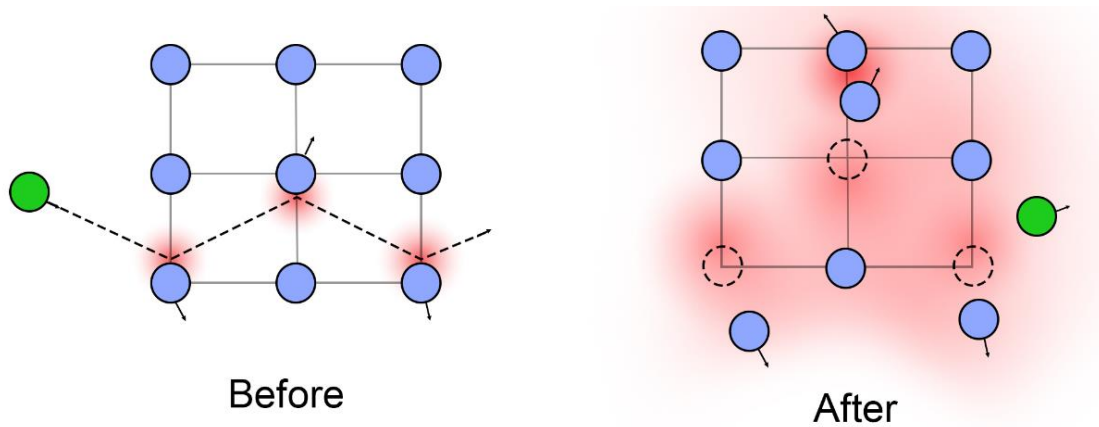

Figure 3: Diagram showing an incident particle knocking particles off their lattice sites, creating cascading collisions that heat up the surrounding area.

Materials scientists often model the energy loss of the incident particle using the stopping power, $S = -\frac{dE}{dx}$. There are two primary forms of stopping power: nuclear and electronic. Electronic stopping power is caused by inelastic collisions with electrons, leading to excitations and ionization, and it is the dominant form of energy transfer at higher incident momenta and charge numbers [18]. Nuclear stopping power arises from elastic collisions of the incident particle with target nuclei [18]. The stopping power is written in terms of its nuclear and electronic components, shown below (Eq. 1)

$$S_{total} = -\left(\frac{dE}{dx}\right)_{total} = -\left(\left(\frac{dE}{dx}\right)_{electronic} + \left(\frac{dE}{dx}\right)_{nuclear}\right) \quad (1)$$

The graph of stopping power as a function of penetration depth typically takes the shape of a Gaussian curve ending in a sharp 'Bragg peak'. The stopping power rises to this peak as the particle slows and then drops abruptly to zero once all energy is lost [19]. Before the Bragg peak, the graph is relatively flat and linear, with a mix of nuclear and electronic stopping [19]. An example of stopping power graph is shown below in Figure 4.

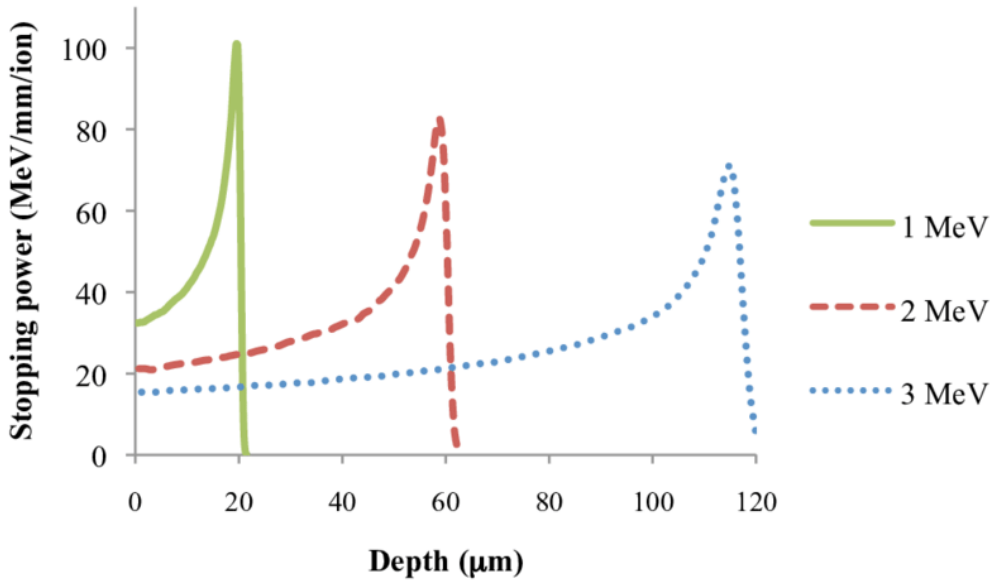

Figure 4: Stopping power graphs [20] for protons irradiating refractory ceramic fibre at different energies.

Electronically dominated interactions create defects called 'ion tracks', which take the shape of long, thin cylindrical amorphous regions caused by the rapid thermal heating and cooling from electronic energy deposition [8]. Nuclear-dominated interactions, by contrast, create the aforementioned nuclear tracks. For this reason, we are primarily interested in the region before the Bragg peak. This region also offers the benefit of avoiding the excessive heating that occurs as the particle approaches the end of its range.

3 Problem Objectives

This section details the constraints and quantitative goals for achieving the project's two primary objectives: creating specialized software for particle beam heating simulations, and using the software to design an irradiation experiment for successful nuclear track production in olivine.

3.1 Software Constraints

The main stakeholders are materials engineers and physicists who will be using the software, making comprehensive documentation and readable code essential. The software also needs to be highly customizable, since these users may have different experimental setups, computational constraints, and simulation requirements. This is particularly important because a primary goal of the thesis is to develop software that produces accurate physics while avoiding the steep learning curves and black-box nature of proprietary tools. To ensure that the software can also be easily extended or improved upon in the future, following industry-standard conventions, such as consistent naming practices and avoiding magic values, is essential to enhance readability and maintainability.

The performance and efficiency of the software are major constraints, since typical mesh grids consist of tens of thousands of elements. Additionally, users will likely run the software on desktop computers or laptops, which have significantly less processing power and memory than high-performance computing systems. However, defining a precise metric for this constraint is difficult due to the wide variation in mesh sizes and hardware specifications. Therefore, we adopt a practical guideline that an “average” simulation should complete in under 3 hours and use less than 16 GB of RAM.

3.2 Experimental Constraints

The experimental parameters that can be varied are the beam intensity, energy, irradiation area, irradiation time, and the sample dimensions.

Thermal annealing measurements show that olivine ion tracks fragment after 30 minutes above 620 °C and shrink measurably above 400 °C over 24 hours [21]. Since nuclear tracks are significantly shorter (tens of nanometres compared to tens of micrometres for ion tracks)

[6][22], we conservatively require that nuclear stopping-dominated regions remain below 150 °C (423 K) under steady-state conditions.

The ion-track formation threshold for olivine is above ~6 keV/nm [23]. Hydrogen beams incident on olivine produce stopping powers well below this threshold, even near the Bragg peak [9]. The lower stopping power also leads to reduced sample heating, enabling the use of higher beam intensities (particle flux) that increase the probability of nuclear recoil events occurring [24]. In addition, the particle beam at RMTL only supports H^+ and He^+ irradiation [25], therefore we restrict simulations to proton beams only.

A computational study of low-energy recoils in olivine found a 100% track-formation probability for PKA energies greater than 1 keV, with track yields saturating above ~200 keV as electronic stopping becomes significant [22]. Therefore, the energy deposited by the beam per unit length should remain below 200 keV along the entire length of the sample. Another study found that the maximum simulated penetration depth of a 5 MeV hydrogen beam into olivine is ~150 μm [9]. The stopping power curve was also nuclear dominated (flat) between 0 - 60 μm, with an average value of ~20 keV/μm [9]. Therefore, we will simulate a 5 MeV incident energy with a sample thickness between 40 - 60 μm. The study also used a total proton dose of 0.0138 C or ~10^{17} protons to produce a significant number of nuclear tracks in a 50 μm sample of olivine [9]. Therefore, the irradiation period t should be long enough for the total proton fluence N to be at least 10^{17}. This can be calculated with (Eq. 2)

$$t = \frac{N}{I} \tag{2}$$

where I is the beam intensity in units of s^{-1}.

The experimental goals are summarized below in Table 1.

Table 1: Summary of quantitative and qualitative goals for successfully producing nuclear tracks in a sample of olivine.

Concern	**Constraint**	**Goal**
Thermal annealing	Ion tracks shrink above 400 °C [21] Ion tracks fragmented at 620 °C [21] Nuclear tracks ~10^3 times smaller than ion tracks [6][22]	Require temperature remains below 150 °C (423 K) for nuclear tracks
Ion-track formation	Threshold is > 6 keV/nm [23]	Only use a proton beam
PKA energy	Probability for track formation saturates at 200 keV [22]	Integrated stopping power should be below 200 keV
Bragg peak	5 MeV hydrogen beam penetrates ~150 μm [9]	Keep sample thickness between 40 - 60 μm (flat region)
Number of nuclear recoil events	~10^{17} protons on target produces significant number of tracks [9]	Sample irradiation period needs to be long enough to reach 10^{17} protons total

4 Models

This section details the thermal modelling framework used in the software, which includes computational fluid dynamics techniques, and the formulation of particle beam irradiation as a heat source.

4.1 Heat Equation and Finite Volume Method

The heat equation is a 3D partial differential equation (PDE) that describes the temporal and spatial evolution of heat transfer. The general form for a solid material with temperature T is given by (Eq. 3)

$$\frac{\partial(\rho C T)}{\partial t} = \nabla \cdot (k \nabla T) + S_E \tag{3}$$

where ρ, C, and k are the material's density, heat capacity, and thermal conductivity, respectively, and S_E is a source heating term. This equation relates the transient term $\frac{\partial(\rho C T)}{\partial t}$ to heat diffusion $\nabla \cdot (k \nabla T)$. To solve this PDE numerically, the finite volume method (FV) from computational fluid dynamics (CFD) was used. In FV, the domain of interest is discretized into cell volumes to form a mesh grid [26]. The most basic 3D mesh uses identical cubic cells, which is shown below in Figure 5.

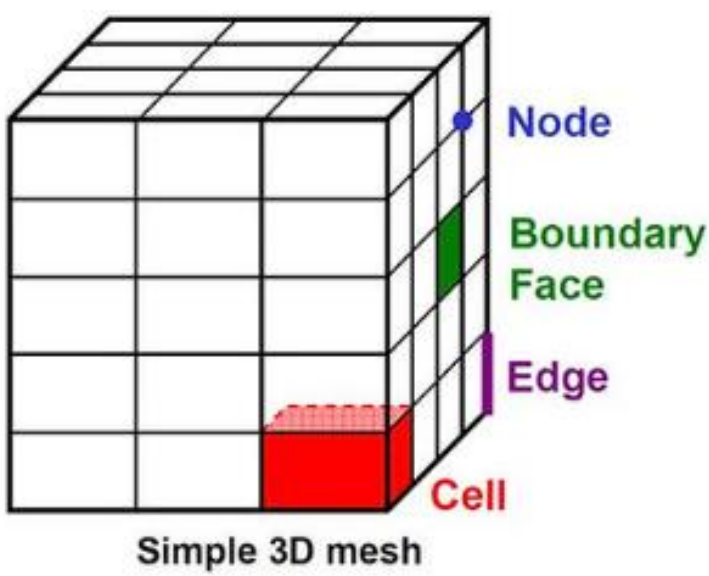

Figure 5: Diagram showing a basic 3D cubic mesh for the finite volume method [27]. Each cell has faces, edges, and a node.

Each cell has a node, edges, faces, and neighbouring cells. We begin by labelling each neighbouring node with uppercase letters $\{N, S, E, W, T, B\}$, and each face of the target cell with lowercase letters $\{n, s, e, w, t, b\}$. This is shown below in Figure 6, where P is the node for the target cell.

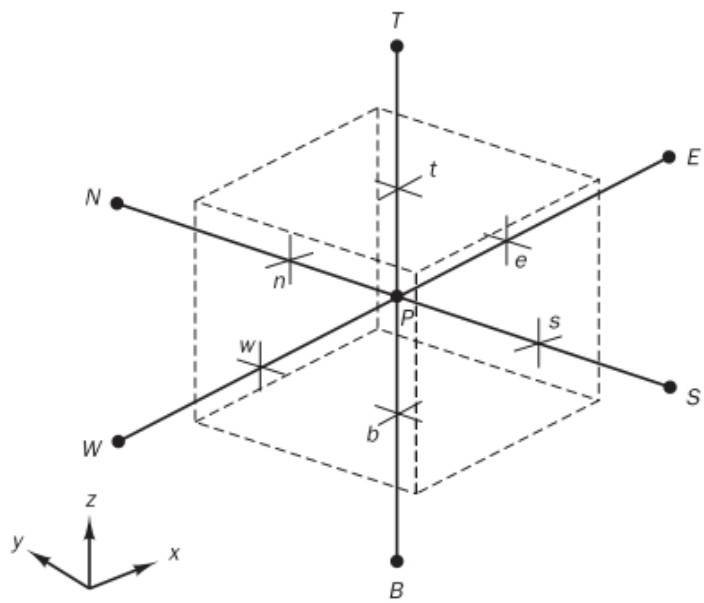

Figure 6: Diagram from [26] showing the labelling for neighbouring cell nodes and faces for a target cell P.

We set the fluxes to be positive for the $\{n, e, t\}$ directions and negative for the $\{s, w, b\}$ directions. Integrating the diffusion term of Eq. 3 with respect to a cell volume V_C, applying Gauss's divergence theorem, and approximating the spatial partial derivatives using finite differencing, we end up with (Eq. 4) [26]

$$\int_{V_C} \nabla \cdot (k\nabla T) dV \approx k(a_E T_E + a_W T_W + a_S T_S + a_N T_N + a_B T_B + a_T T_T - a_P T_P) \tag{4}$$

where the coefficients a_I are given below by Eq. 5 and Eq. 6

$$a_I = \frac{A_i}{\delta x_{P,I}} \tag{5}$$

$$a_P = a_E + a_W + a_N + a_S + a_T + a_B \tag{6}$$

where i denotes the area of a cell face, I denotes the direction of a neighbouring cell node, and $\delta x_{P,I}$ is the distance from the target cell node P to a neighbouring cell node in the I direction. Integrating the transient term, we obtain (Eq. 7) [26]

$$\int_{V_C} \frac{\partial(\rho C T)}{\partial t} dV \approx \frac{\Delta\left(\rho_P C_p T_P\right)}{\Delta t} V_C \tag{7}$$

where the p subscript denotes that this is the average value over the cell, and Δ is taken between two time steps t_i and t_{i+1}. Similarly, integrating the source term, we obtain (Eq. 8) [26]

$$\int_{CV} S_E dV \approx (S_E)_p V_C \tag{8}$$

By applying these approximations across the entire mesh grid and using appropriate boundary conditions, a system of linear equations is produced that can be solved for the temperature field [26]. This scheme can also be applied to a variety of mesh grid shapes, but a more careful definition of neighbouring nodes is required [28].

4.2 Boundary Conditions

We identified four boundary conditions relevant to particle beam irradiation experiments: ideal and non-ideal fixed temperature, black-body radiation, and thermal contact resistance. For a given boundary Γ, an ideal fixed temperature T_0 boundary condition is given by (Eq. 9)

$$T|_\Gamma = T_0 \tag{9}$$

This corresponds to idealized surface cooling, such as when a large heat sink is perfectly coupled to the sample. In practice, however, the heat transfer rate between the sample and heat sink is finite, meaning a heat flux q boundary condition must be used instead (Eq. 10)

$$q|_\Gamma = h(T - T_{HS}) \tag{10}$$

where T_{HS} is the fixed temperature of the heat sink and h is the thermal boundary conductance. Another boundary condition is black-body radiation, which represents passive heat radiation to the surrounding vacuum chamber. This is given by the Stefan-Boltzmann law (Eq. 11)

$$q|_\Gamma = \epsilon\sigma(T^4 - T_\infty^4) \tag{11}$$

where ϵ is the emissivity, σ is the Stefan-Boltzmann constant, and T_∞ is the vacuum's ambient temperature. We can factor Eq. 11 into three terms (Eq. 12) [29].

$$q|_\Gamma = \epsilon\sigma(T^2 - T_\infty^2)(T - T_\infty)(T + T_\infty) \tag{12}$$

If we then define $h_r = \epsilon\sigma(T^2 - T_\infty^2)(T + T_\infty)$, we obtain a linearized boundary condition (Eq. 13)

$$q|_\Gamma = h_r(T - T_\infty) \tag{13}$$

which can be used in implicit PDE solving schemes [29]. The last boundary condition is thermal contact resistance, which arises at the interface between two materials. This is given by (Eq. 14) [30]

$$q|_\Gamma = \frac{(T_2 - T_1)}{R_{tc}} \tag{14}$$

where T_2 and T_1 are the temperatures of the two media, and R_{tc} is the thermal contact resistance. R_{tc} is highly dependent on geometry, clamping pressure, and surface textures [30]. While analytic approximations exist for R_{tc}, this value is usually determined from experimental data [30].

4.3 Heat Generation of Particle Beam Irradiation

The particle beam is modelled as a constant volumetric heat source, which enters the sample along the x-direction. The beam power is distributed over a 2D cross-sectional profile. For a uniform rectangular beam profile, the power density PD is given by (Eq. 15)

$$PD = \begin{cases} \frac{P(x)}{W \cdot H} & if\ |y| < \frac{W}{2}, |z| < \frac{H}{2} \\ 0 & otherwise \end{cases} \tag{15}$$

where $P(x)$ is the beam power at a point x, W and H are the width and height of the beam's cross-sectional area. For a Gaussian-shaped beam profile, PD is given by (Eq. 16) [31]

$$PD = \frac{P(x)}{2\pi\sigma_y\sigma_z}\exp\left(-\frac{y^2}{2\sigma_y^2}\right)\exp\left(-\frac{z^2}{2\sigma_z^2}\right) \tag{16}$$

where σ_y and σ_z are the RMS radius of the beam in the y and z directions respectively. The beam energy is given by (Eq. 17)

$$E_{beam} = E \cdot I \tag{17}$$

where E is the instantaneous beam energy, and I is the beam intensity. Assuming that the beam intensity is constant along x, the change in beam energy $\frac{dE_{beam}}{dx}$ is given by (Eq. 18)

$$\frac{dE_{beam}}{dx} = -\left(\left(\frac{dE}{dx}\right)_{nuclear} + \left(\frac{dE}{dx}\right)_{electronic}\right) I = -\frac{dE_b}{dx} \tag{18}$$

where $\frac{dE_b}{dx}$ is the energy deposition gradient into the target material (energy lost by the particle beam is gained by the medium). The heat generation S_E for a cell is a function of the energy flux (power density) and energy deposition, given by (Eq. 19) [31]

$$(S_E)_{cell} = (PD)_{cell} \cdot \frac{1}{E_{beam_0}} \left(\frac{dE_d}{dx}\right)_{cell} \tag{19}$$

where the energy deposition gradient is normalized to the initial beam energy E_{beam_0}. This is used as a constant source term in the FV method (Eq. 8).

5 Methodology

This section details the methodology used to design and develop the software.

5.1 Design Choices

We developed a Python package with a focus on object-oriented programming. Python was chosen over Fortran and C++ due to its ease of use, extensive list of scientific libraries, and popularity within physics and engineering fields. There are pre-existing tools, like FLUKA and ANSYS [32][33], which can be used for energy deposition and heat analysis, but these programs are black-box, non-specialized, and difficult to learn. Object-oriented programming was chosen due to it being a standard in modern software engineering, as well as its benefits of being highly modular. The beam energy deposition calculations used in our code are based on a recent paper that was motivated by similar reasons [31], but the authors have prohibited public access to their software. Therefore, it was decided that we would develop an open-source Python package.

Stopping power tables were pulled from SRIM, a Monte Carlo software for simulating particle transport in matter, since it is a widely used standard in materials engineering and particle physics [34]. In-house calculations for electronic and nuclear stopping powers were considered, but the majority of analytic solutions require approximations that are only accurate for the simplest cases [35]. In addition, SRIM outputs automatically provide conversion factors between different stopping power units, allowing calculations to be standardized without concern for the units of user-input data.

To solve the heat equation, the open-source CFD FV Python package FiPy was used [28]. FiPy employs implicit solution methods, which have the benefits of computational speed and unconditional stability at the cost of some accuracy [26]. Fine-grained accuracy is unnecessary for our purposes since we are only interested in steady-state solutions at long timescales. The package also allows for custom mesh grids to be imported from Gmsh, a standard open-source meshing software in CFD [36]. Other FV Python packages, such as PyFVM [37] and PyRADISE [38], were also considered, but it was determined that their functionality and documentation were lacking in comparison to FiPy.

5.2 Software Engineering

User-friendliness and flexibility were prioritized throughout development. This included following standard Python naming conventions [39] and providing inline comments explaining function purposes, parameter types, and expected outputs. Unit tests were created for each class method that check for valid inputs and provide descriptive error messages for troubleshooting. Larger methods include debugging flags that can be enabled to provide information on key variable values, such as total energy deposition and material properties. Jupyter Lab Notebook tutorials were also created that demonstrate the major functionalities of the package and provide a real-world use case for experimental irradiation design. An example of these tutorials is provided in Appendix B.

To optimize the software for memory efficiency and computational performance, calculations were vectorized with NumPy arrays wherever possible, along with sparse matrix representations to minimize memory usage. User-adjustable spatial and temporal resolutions were also implemented, allowing users to control computational accuracy.

Software development began with implementing a simple model that was continuously built upon: a 1D particle beam entering a 2D rectangular medium. Progress and changes were tracked using version control on GitHub, with a primary branch that contains the latest functional version and testing branches for new features. The project was broken down into smaller monthly code sprints, with specific functional goals and scheduled implementation periods. Classes were divided into two primary categories: components of the experimental apparatus, and components of the heat simulation. The full structure of the software was also visualized using a UML class diagram that was periodically updated throughout development, which can be seen below in Figure 7.

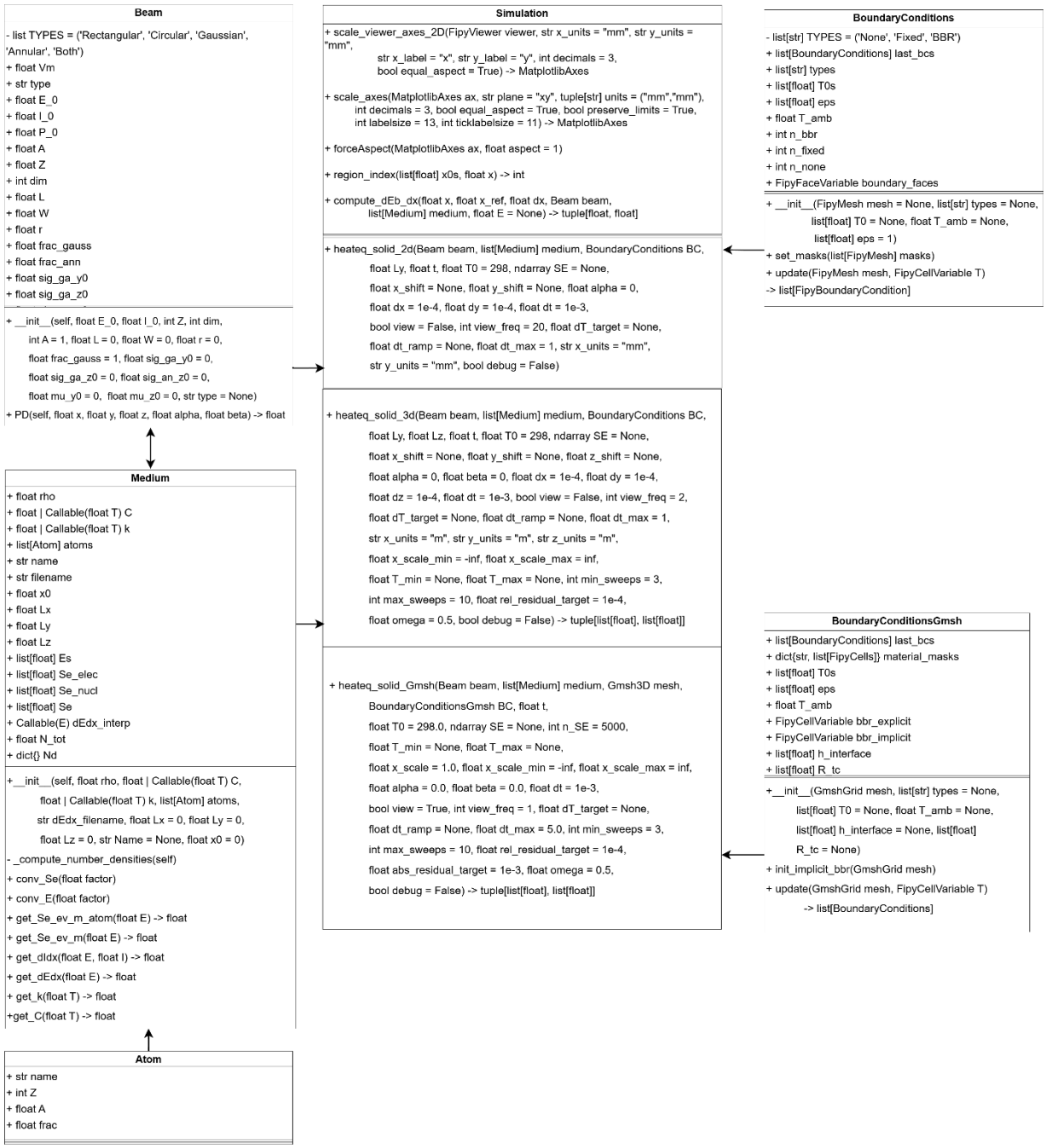

Figure 7: UML class diagram of the heat simulation software. A higher resolution version is available at [40].

6 Design Validation

The software's functionality was evaluated using a combination of small-scale test cases and comprehensive large-scale benchmarks. These test programs can be found on the GitHub [40].

6.1 Specific Test Cases

Simple test programs were written for each major feature implemented. A short list of these test cases and their purposes is given below in Table 2.

Table 2: Short list of test programs for the simulation software, as well as which features were being tested and what benchmark was used to verify functionality.

Test Description	Test Purpose(s)	Benchmark
Initialize a hydrogen beam object and a medium object with the material properties of copper	Calculate stopping powers and energy deposition gradients	SRIM tables [19] and FLUKA simulations [31]
	Calculate power density for different beam profiles	FLUKA simulations [31]
	Calculate total energy deposited into the medium	Confirm that it sums to the initial beam energy
Shoot a particle beam into a block of olivine with no applied boundary conditions	Confirm that particle beam is generating heat correctly	Compare temperature field with stopping power curve
	Calculate material properties as they change with temperature	Compare calculated values to expected values [41][42][43]
	Confirm that particle beam shape follows the specified profile	N/A
Create a block of copper and apply boundary conditions with no beam	Confirm that fixed temperature boundary conditions work	Analytic standing wave solutions [44]
	Confirm that black body radiation conditions work	Analytic expressions for rate of heat loss [45]
Shoot a beam into a connected block of olivine, aluminum, and lead	Confirm interfacial boundary conditions	Heat flux is continuous at the boundary
	Confirm that heat conductivity is interpolated correctly	Compare value at boundary cells to harmonic mean [46]

The test cases were also run with varying temporal and spatial resolutions to assess their impact on the results. It was observed that the transient evolution of beam-induced heating is only resolvable with time steps on the order of microseconds or smaller. However, the long-term steady-state solution obtained using larger initial time steps (~0.1 s) was identical to that obtained with smaller time steps. In terms of spatial resolution, significant deviations in temperature were only observed when the mesh resolution in the yz plane was coarser than the beam dimensions; in extreme cases, this resulted in the beam not appearing in the simulation at all. Once the mesh resolution in the yz plane reaches approximately one-quarter of the beam width/height, further refinement produces negligible differences in the maximum temperature results. This is shown below in Figure 8.

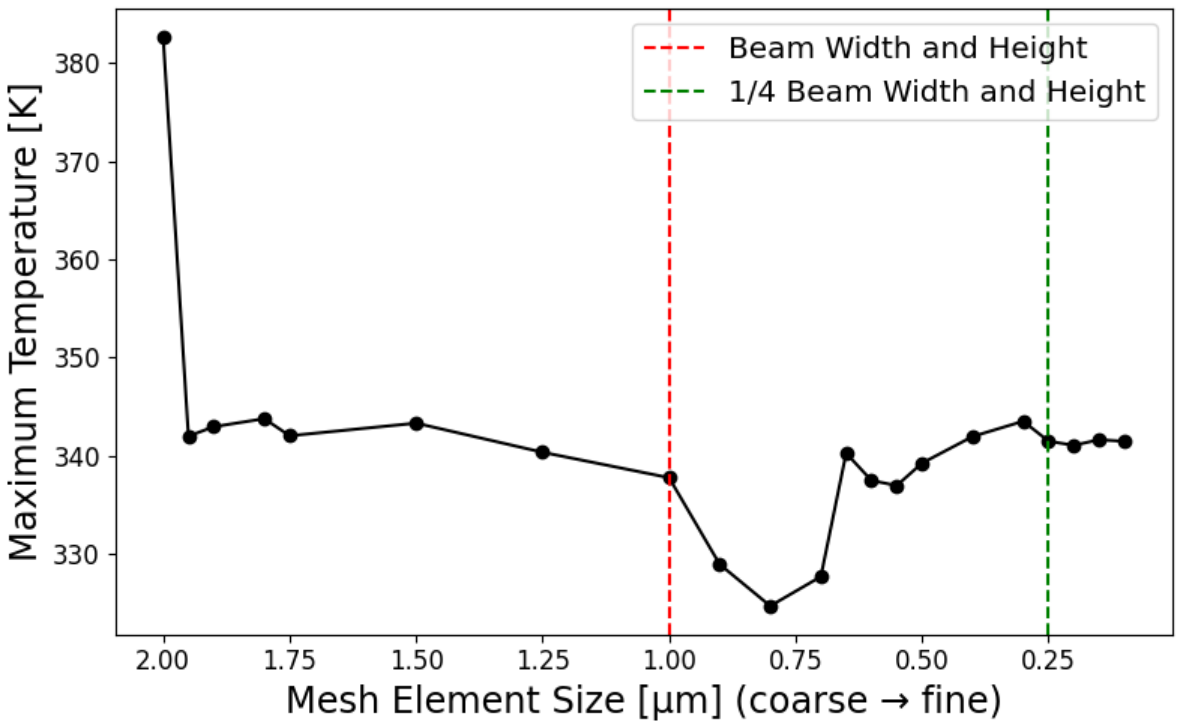

Figure 8: The maximum recorded temperatures as a function of (uniform) mesh size for a 5 MeV, 5 nA, 1 μm x 1 μm rectangular beam incident on a 1 μm x 1 μm x 1 μm block of olivine. Each simulation was run for 10 s with an initial time step of 0.001 s.

6.2 Larger-Scale Benchmarks

The software's accuracy was also assessed by reproducing a published ANSYS benchmark: a 50 MeV, 2.25 mA, 28 mm radius proton beam incident on a 1 mm x 67 mm x 67 mm eurofer98 plate [47]. Our temperature maps closely match the literature profiles and maxima (~1200 K) up to 1 s. Divergence at later times is attributable to limited high-temperature material data as the empirical conductivity and heat-capacity fits for eurofer98 [48] terminate near 900 K, requiring extrapolation in our model. Shown below in Figure **9** and Figure 10 are the temperature distributions reported in the referenced study and those obtained from our simulation.

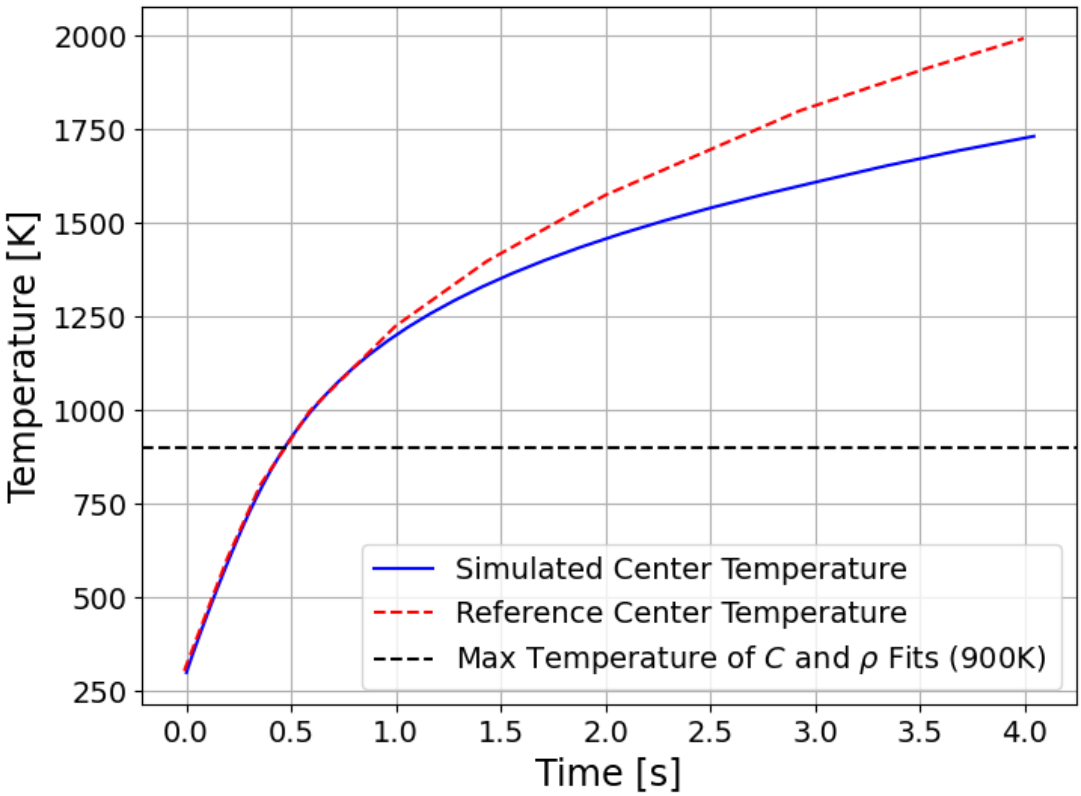

Figure 9: Temperature [K] as a function of time [s] for a 50 MeV, 2.25 mA, 28 mm radius hydrogen particle beam shot into a 1 mm x 67 mm x 67 mm rectangular plate of eurofer98 steel. Shown in blue is the simulated value and in red is the ANSYS benchmark [47].

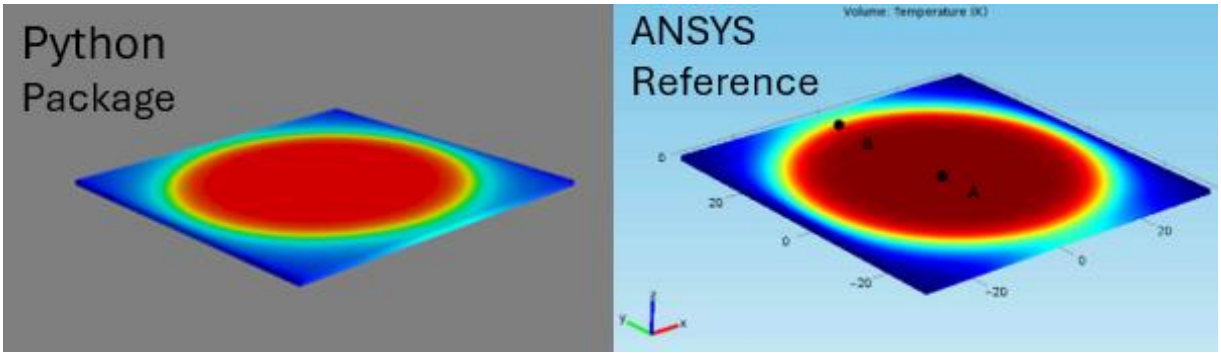

Figure 10: Temperature distribution shape for a 50 MeV, 2.25 mA, 28 mm radius hydrogen particle beam shot into a 1 mm x 67 mm x 67 mm rectangular plate of eurofer98 steel after 5 s. Shown on the left is the simulation and on the right is the ANSYS benchmark [47].

7 Results

This section presents the simulation results for a simplified model of the PISH designed in Gmsh [11][36], demonstrating both the functionality of the software and its usage to inform irradiation experimental design.

7.1 Experimental Setup and Mesh Grid

The experimental irradiation setup is as follows. A rectangular foil of olivine and an aluminum substrate are clamped down by two long tantalum bars. Silver paste is applied between the aluminum substrate and copper heat sink to promote heat transfer. The setup is held inside a vacuum chamber, and the particle beam is incident on the center of the sample. This is drawn below in Figure 11.

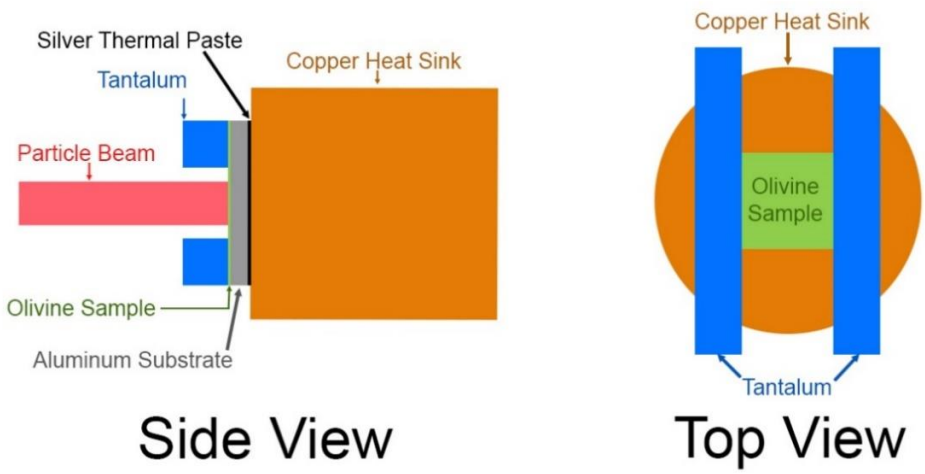

Figure 11: Diagram showing the experimental setup (PISH) for particle beam irradiation.

The copper heat sink is significantly larger than the sample and is being continuously water cooled [12]. Therefore, in the model, we can replace the heat sink with a non-ideal fixed temperature boundary condition. Similarly, the tantalum bars are significantly longer than the sample, so their ends are modelled as ideal fixed-temperature boundaries. A custom mesh was created in Gmsh following these specifications, with dimensions of 50 μm x 3 cm x 3 cm for olivine and 2 mm x 3 cm x 3 cm for aluminum. The mesh density of the olivine and aluminum was set to be finer in the x-direction (along the beam axis). The (scaled) mesh grid is shown below in Figure 12.

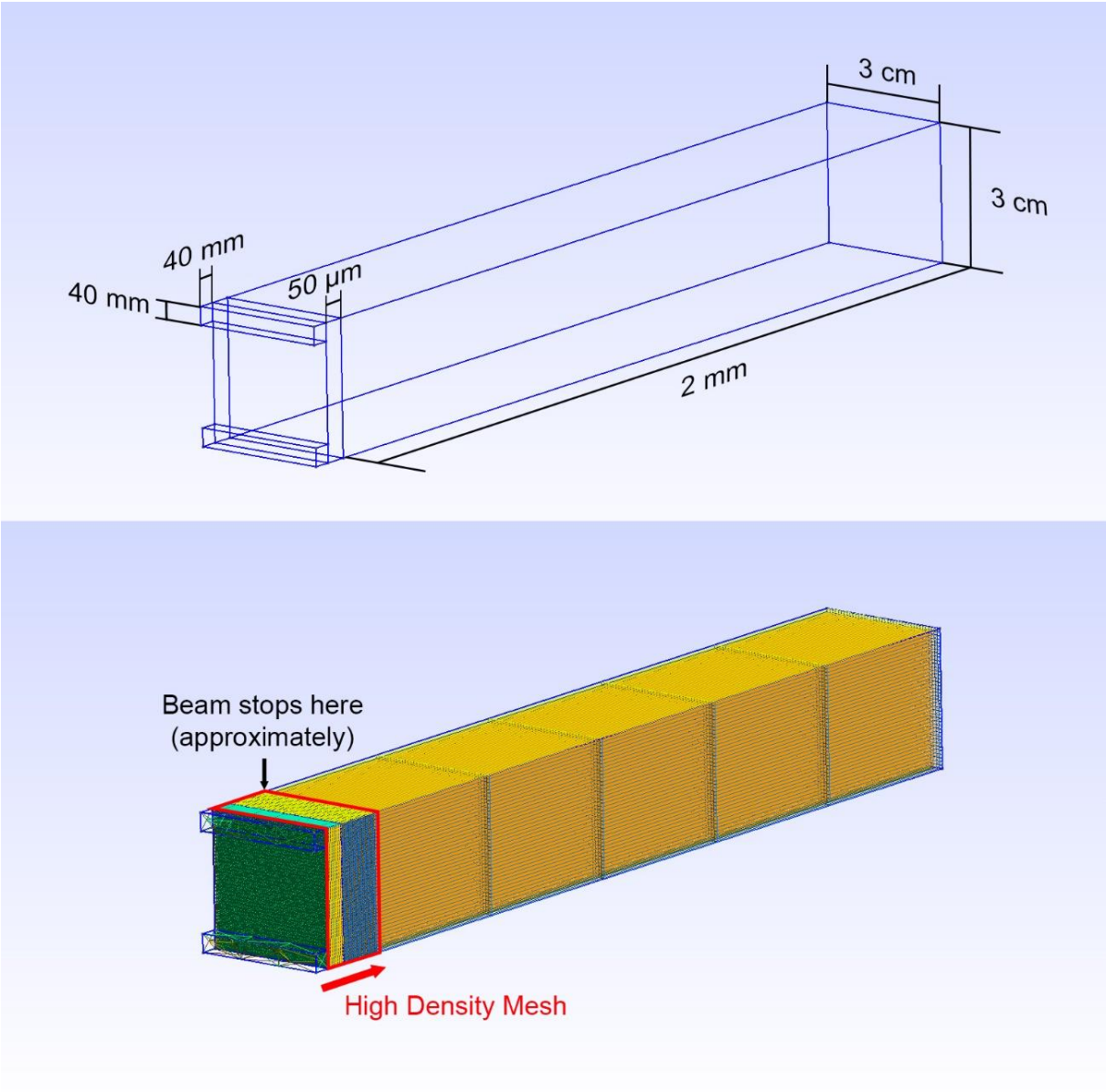

Figure 12: Simplified mesh design for PISH made in GMSH. The top image shows the geometry, while the bottom image shows the meshing. The sample and aluminum substrate dimensions have been scaled along the x-axis by 10^3.

7.2 Simulation Results

The experimental beam parameters from a prior RMTL irradiation experiment were replicated [9]: a 1.5 cm x 1.5 cm, 5 MeV, 0.5 µA square beam incident on a sample of olivine. The aluminum substrate and tantalum bars were assumed to be 100% pure. The olivine's composition was taken to be 25.33% Mg, 14.57% Fe, 18.33% Si, and 41.77% O [9]. The heating generated by the particle beam is shown below in Figure 13.

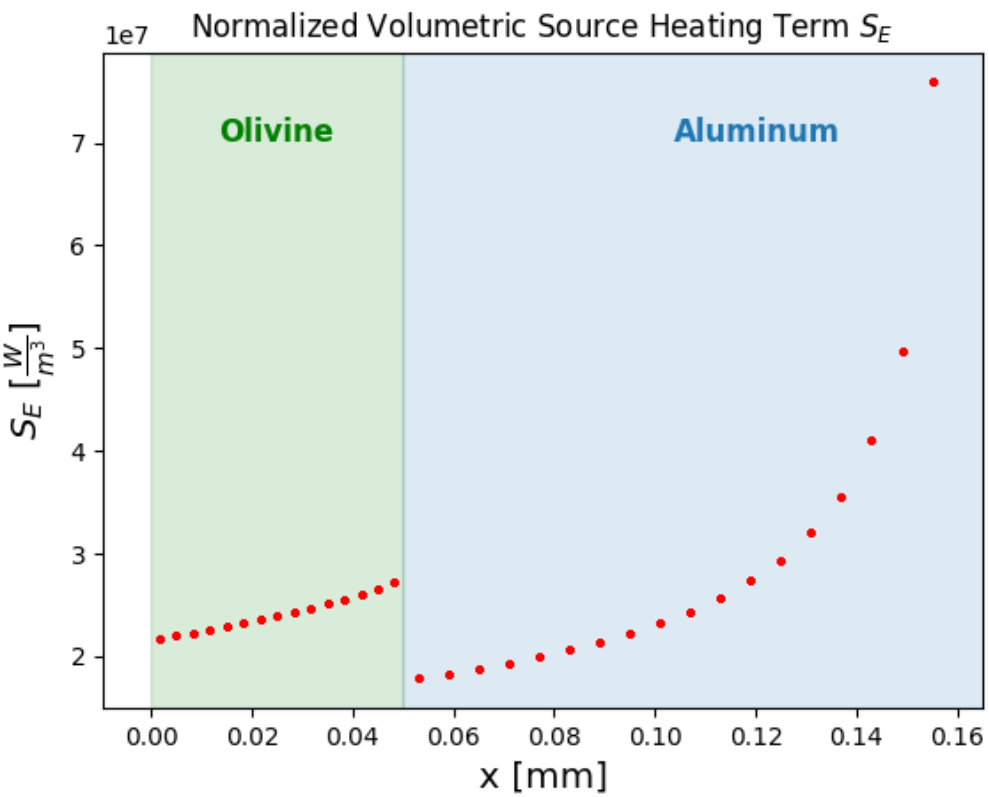

Figure 13: Volumetric heating for a 1.5 cm x 1.5 cm, 5 MeV, 0.5 µA square beam incident on a sample of olivine and aluminum substrate. Values past the Bragg peak (~0.16 mm) are not shown since the beam energy drops to zero.

The boundary between the aluminum substrate and heat sink was set to have a thermal boundary conductance of $h = 10^4 \frac{W}{m^2 \cdot K}$ [12] and a heat sink temperature of $T_{hs} = 298\ K$. A thermal contact resistance boundary condition was applied at both the olivine-tantalum and olivine-aluminum interfaces. All other faces radiate to the surrounding vacuum at $T_{amb} =$

298 K. Material properties (ρ, C, k) were obtained from [41][49-52] and emissivity values (ϵ) from [53][54]. The thermal contact resistance between the olivine and tantalum was set to a value of $R_{tc} = 10^{-3}\ \frac{m^2 K}{W}$ [30]. The thermal contact resistance value between the olivine and aluminum was increased until the maximum steady-state surface temperature was near the measured value of 520 K [9]. This led to $T_{max} = 522\ K$ with an unexpectedly high value of $R_{tc} = 10^{3}\ \frac{m^2 \cdot K}{W}$. The results are shown below in Figure 14 and Figure 15.

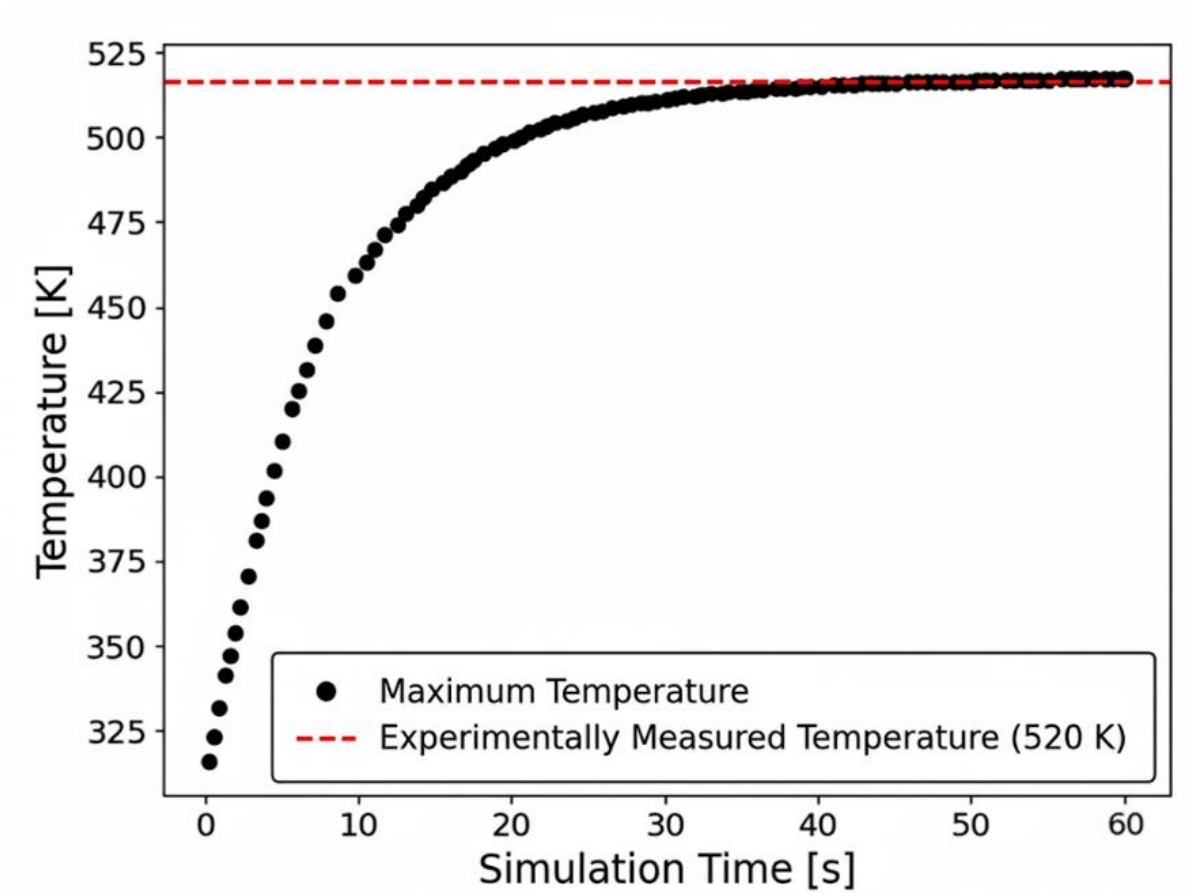

Figure 14: Maximum temperature [K] as a function of time [s] for a 1.5 cm x 1.5 cm, 5 MeV, 0.5 μA rectangular beam incident on an olivine sample using a simplified PISH geometry.

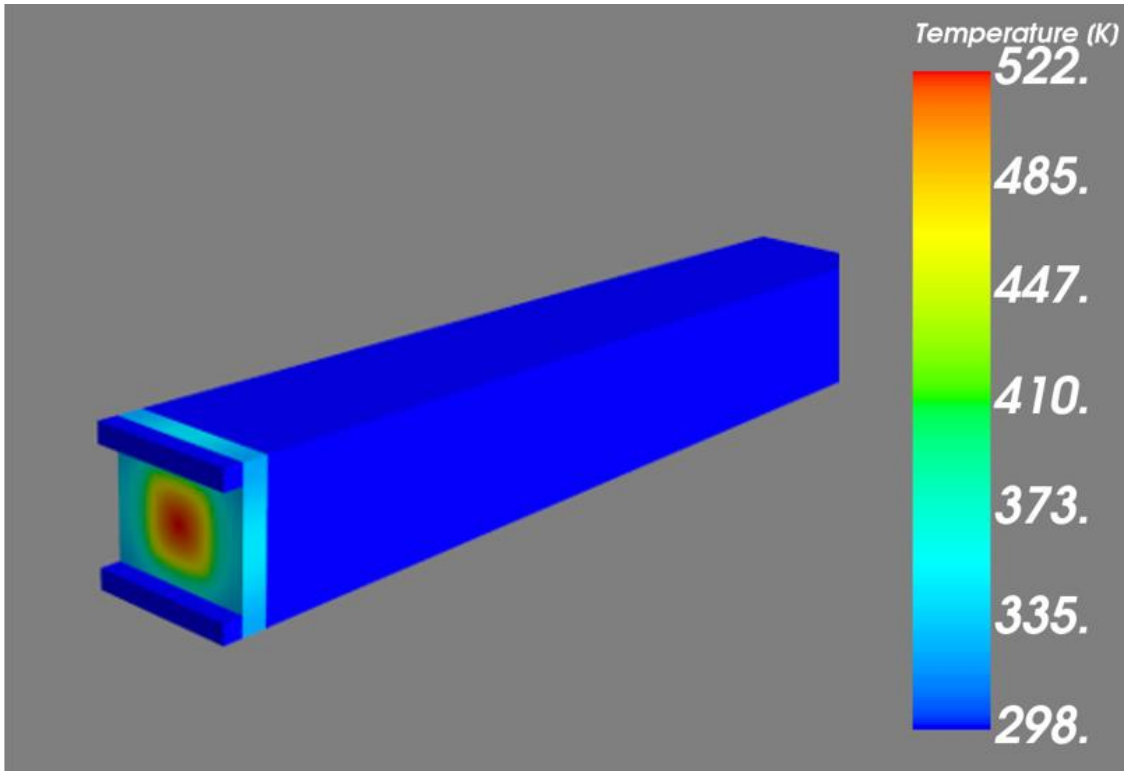

Figure 15: 3D simulation results for a 1.5 cm x 1.5 cm, 5 MeV, 0.5 μA rectangular beam incident on an olivine sample after 60 s of irradiation.

The author also commented on the unexpectedly poor heat transfer between the olivine and aluminum during the experiment [9]. This is likely attributable to weak clamping pressure that creates a small air gap, since the olivine sample was very brittle after machining [9]. This air gap, combined with the extremely poor heat transfer in vacuum, can effectively thermally decouple the two materials [30]. The aluminum substrate reached a maximum temperature of 301 K, which is expected due to its high thermal conductivity and strong cooling boundary condition. The tantalum bars remained at 298 K throughout the entire simulation, indicating that residual heating effects from the sample are negligible.

Next, we reduced the beam intensity until the maximum surface temperature fell below the set threshold of 150 °C (423 K). This resulted in an intensity of $I = 0.2\ \mu A$, with a maximum temperature $T = 401\ K$. The resulting plot is shown below in Figure 16.

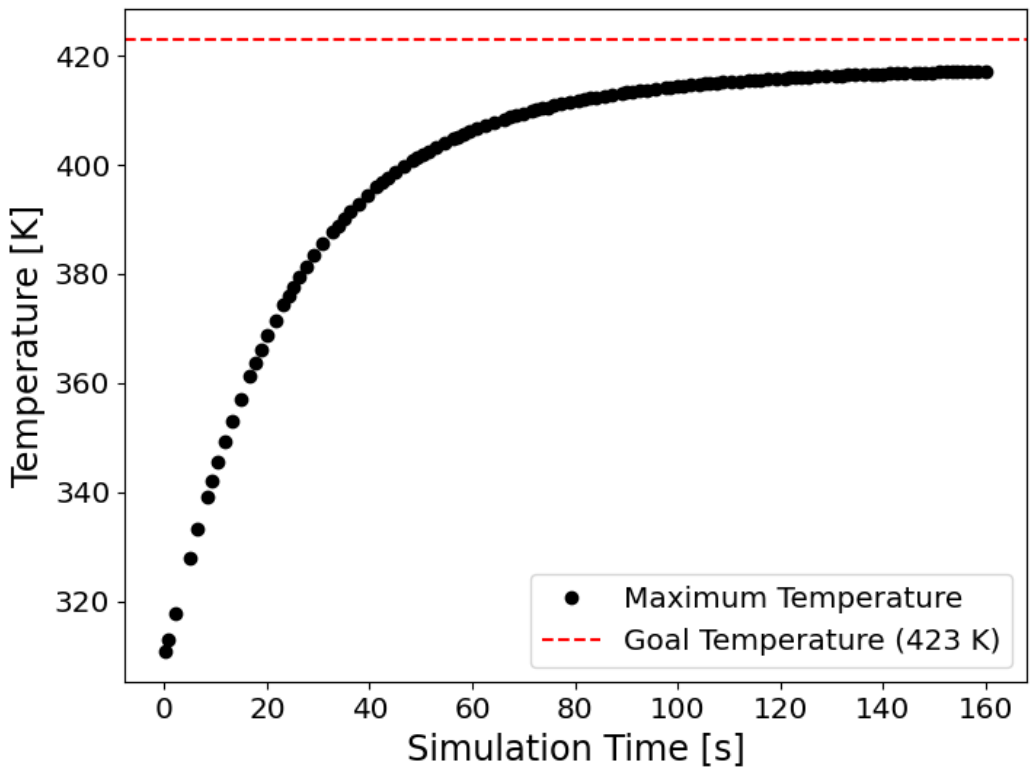

Figure 16: Maximum temperature [K] as a function of time [s] for a 1.5 cm x 1.5 cm, 5 MeV, 0.2 μA rectangular beam incident on an olivine sample using a simplified PISH geometry.

To achieve a total of 10^{17} protons on target, the total irradiation time must be (Eq. 2)

$$t = \frac{N}{I} = \frac{10^{17}}{\frac{0.2\mu A}{1.602 \cdot 10^{-19} C}} = 22.25\ hours \tag{2}$$

Thus, a 1.5 cm x 1.5 cm, 5 MeV, 0.2 μA beam should be used with an irradiation period of ~22 hours to produce nuclear tracks in the olivine sample while preventing thermal annealing.

The simulations were run on a desktop computer with the following specifications: AMD Ryzen 7 5800X CPU, NVIDIA GTX 1080 GPU, and 16 GB of RAM. Both simulations had 61,114 mesh cells and used ~10 GB of RAM. The first simulation (Figure 14) took ~1 hour to run, while the second simulation (Figure 16) took ~2 hours and 30 minutes to run. Therefore, the performance goals of the software were reached (< 3 hours runtime and < 16 GB of RAM).

8 Iteration, Future Work, and Limitations

To further optimize the software's performance, parallelization and GPU acceleration can be implemented. FiPy supports the use of mpi4py, a package that enables Python programs to use multiple processing cores at once [55]. This is used in conjunction with PETSc, a package that implements parallelized numerical techniques specifically for PDE solving [56]. Unfortunately, there is no native Windows support for PETSc, requiring a Linux-based machine or virtual environment instead [56]. Similarly, the interface pyamgx can be used to numerically solve PDEs on the GPU [57], but this also requires Linux [58]. With these features implemented, simulations can run two to three orders of magnitude faster (measured in seconds) than the native SciPy-based solver [28].

Currently only solid materials can be modelled, but certain irradiation experiments may involve material melting or the use of a liquid medium [59][60]. This can be implemented by modifying the heat equation to consider the fluid's velocity and adding convection terms [61]. The Navier-Stokes equations can then be used to numerically solve for the temporal and spatial evolution of fluid velocity, leading to a set of coupled partial differential equations [61]. This would also require new boundary conditions to be considered, such as the fluid inflow and outflow through a surface [26]. Due to the complexities of this model and the fact that our experimental design aims to avoid melting, this was not implemented.

At higher incident energies (> 10 MeV), proton-induced nuclear reactions can attenuate beam intensity and reshape heat-generation profiles [31]. These reactions can be incorporated by summing nuclear cross-sections for all relevant proton transmutations [31]. Additionally, nuclear reactions generate secondary particles that propagate through the material and deposit energy at locations removed from the primary interaction site [31], meaning that energy deposition is no longer purely local. Since these energies and intensities are well beyond the planned operating conditions, these effects were not implemented.

9 Economics, EDII, and Safety

The software was developed entirely with free, open-source libraries and incurs no direct project cost. No specific environmental or safety considerations are associated with the computational work. However, in the scientific community, there are ethical concerns regarding software published under restrictive licenses or behind paywalls [62]. Closed-box tools limit scientists' ability to scrutinize and verify the underlying science, while also creating economic barriers for researchers seeking accessible tools. For these reasons, the decision was made to make the project publicly available and open source.

The following experimental economic and safety analyses are preliminary, as the majority of the thesis was focused on software development. A more in-depth analysis should be carried out closer to the experiment date.

Experiments at RMTL are only performed by trained professionals, so there are no major safety concerns with conducting the sample irradiation. There are moderate radiation exposure risks on-site, requiring basic PPE and radiation safety training [10]. Since RMTL uses a lower-energy proton beam (< 8 MeV) [10], the risk of significant post-irradiation activation is relatively low. As mentioned before, proton-induced nuclear reactions, which can produce hazardous radiation such as neutrons, generally do not occur at these incident energies [63].

RMTL does not publicly disclose pricing, so only estimated costs are presented here. At Michigan's ion lab, a 4 MV tandem accelerated beam costs $55 USD/hr to run for faculty members [64]. RMTL's tandem beam has similar specifications but is likely cheaper to run due to its more recent construction and state-of-the-art technologies [65]. The cost of the olivine sample can be avoided by borrowing from Queen's University's mineral collection [66]. The Queen's Facility for Isotope Research quotes sample preparation for transmission electron spectroscopy, which is the primary imaging method used to study nuclear tracks [9], at $37 per sample [67].

10 Conclusion

An open-source Python package was developed to simulate thermal effects of particle beam irradiation in solid materials using the heat equation and finite volume (FV) method [26]. The software was designed with an emphasis on user-friendliness and modularity, incorporating features such as vectorized calculations, user-controllable mesh resolutions, and comprehensive documentation. Multiple validation programs were created that demonstrated strong agreement with literature and other finite-element software [47].

A custom mesh of the Proton Irradiation Sample Holder at the Reactor Materials Testing Laboratory was created in Gmsh [11][36], including tantalum mounting bars, a surface-cooled aluminum substrate, and an olivine sample. By varying experimental beam parameters in the simulation, a successful experimental configuration was identified, with the software meeting all performance metrics. However, an unusually high thermal contact resistance between the olivine and aluminum was required, effectively insulating the olivine from the rest of the apparatus. As such, this result should be considered a worst-case scenario, and additional experimental designs should be simulated using the tool.

Future studies could explore improved coupling between the aluminum substrate and olivine, such as applying a thermal paste layer or increasing clamping pressure. This would allow for higher beam intensities while still remaining below the thermal annealing threshold, thereby increasing the number of nuclear recoil events.

The final software is publicly available and can be found on GitHub [40].

Word count: 4865

Appendix A. Statement of Work

I worked with Professor Vincent and Professor Balogh last summer on nuclear track imaging using small angle X-ray scattering. Prior work used transmission electron microscopy and chemical etching to read out tracks, but its pitfall lied in its lackluster efficiency. Small angle X-ray scattering (SAXS) was proposed as a solution. In X-ray imaging, a monochromatic beam of X-rays is directed at a sample, leading to scattering off nuclei. In SAXS, the scattering angle is restricted to 0.1-10°, enabling nanometer-scale structural resolution. The main difficulty that comes from using SAXS for paleo-detection is isolating the component of the diffraction pattern caused by dark matter tracks.

The goal of the project was to develop numerical simulations of these signals as a proof of concept for future experimental work. In a perfect crystal, SAXS reveals sharp diffraction peaks, but any defects present will broaden these peaks and add noise to flat regions. We simulated olivine, assuming tracks are monodispersed (uniform size) and cylindrical. Track length distributions from prior work were used, and detection sensitivity thresholds were created using Bayesian statistical methods. Molecular dynamics simulations were also employed to determine the radial track length distribution, but results were inconclusive.

None of the work from the summer project was incorporated into this thesis, as the objectives of the two projects differed. The ultimate goal of this work was to design an experimental setup for generating nuclear tracks, whereas the summer project served as a proof-of-concept study demonstrating the feasibility of using SAXS to image them. To achieve this objective, simulations of heating from particle beam irradiation were required due to concerns about thermal annealing effects. However, my advisors determined that incorporating these effects into existing finite-element tools would be too tedious, and instead recommended focusing the project on developing dedicated software for this purpose.

During the Fall term, I developed the framework for the primary classes (Beam, Medium, Atom, Simulation) and ran preliminary 2D and 3D simulations. During the Winter term, I completely refactored the code (documentation, tutorials, class structures, and more), designed the mesh model for PISH, and added classes and methods to work with the custom mesh grids.

Appendix B. Jupyter Notebook Tutorial

Tutorial 1 - Intro

This tutorial introduces the basics of the software, defining the two objects necessary in all heat simulations:

1. Beam
2. Medium

NOTE: The majority of the software uses SI units and eV for energy. This may be strange to work with for specific values (i.e. density).

BEAM

To start, let's work with the 'Beam' class

```
7]: from Beam import Beam
I = 0.2e-6/1.602e-19 # s^-1
E = 5e6 # eV
```

The Beam class takes intensity in units of s^-1 and energy in units of MeV. There are 5 types of beam types:

1. Rectangular
2. Circular
3. Gaussian
4. Annular
5. Gaussian + Annular

We will start by defining a hydrogen rectangular particle beam in 2D

```
3]: Z = 1 # Atomic number
dimension = 2 # Beam can be 2D or 3D
L = 1e-3 # Meters
W = 1e-3 # Meters
beam = Beam(E, I, Z, dimension, L = L, W = W)
```

The code will automatically determine the beam type based on the given inputs.

The beam object has one primary method that calculates the power density. This method takes in (x, y, z) coordinates (meters) and outputs the power density at that point. Additionally, angles (alpha, beta) can be used to specify the beam divergence in the y and z directions, respectively.

This method on its own is not particularly useful, but the simulation functions use this to calculate the volumetric heating by the beam.

MEDIUM

Next, we will look at the 'Medium' object. These objects hold the material properties (rho, C, k) and atomic compositions of the irradiation targets.

Figure 17: A snippet of one of the tutorials provided for the heat simulation software, introducing the basic classes and objects. The tutorials can be found on the GitHub [40].

References

[1] Planck Collaboration *et al.*, “Planck 2018 results. VI. Cosmological parameters,” *A&A*, vol. 641, p. A6, Sep. 2020, doi: 10.1051/0004-6361/201833910.

[2] M. Klasen, M. Pohl, and G. Sigl, “Indirect and direct search for dark matter,” *Progress in Particle and Nuclear Physics*, vol. 85, pp. 1–32, Nov. 2015, doi: 10.1016/j.ppnp.2015.07.001.

[3] S. Baum *et al.*, “Mineral Detection of Neutrinos and Dark Matter 2024. Proceedings,” May 02, 2024, *arXiv*: 2405.01626. doi: 10.48550/arXiv.2405.01626.

[4] S. Baum, T. D. P. Edwards, K. Freese, and P. Stengel, “New Projections for Dark Matter Searches with Paleo-Detectors,” *Instruments*, vol. 5, no. 2, p. 21, Jun. 2021, doi: 10.3390/instruments5020021.

[5] A. K. Drukier, S. Baum, K. Freese, M. Górski, and P. Stengel, “Paleo-detectors: Searching for dark matter with ancient minerals,” *Phys. Rev. D*, vol. 99, no. 4, p. 043014, Feb. 2019, doi: 10.1103/PhysRevD.99.043014.

[6] V. P. Perelygin *et al.*, “Track length of very heavy ion tracks in olivines,” *International Journal of Radiation Applications and Instrumentation. Part D. Nuclear Tracks and Radiation Measurements*, vol. 12, no. 1, pp. 375–378, Jan. 1986, doi: 10.1016/1359-0189(86)90612-6.

[7] C. Perron, “Relativistic 238U ion tracks in olivine and cosmic-ray track studies,” *Nature*, vol. 310, no. 5976, pp. 397–399, Aug. 1984, doi: 10.1038/310397a0.

[8] D. Schauries, *Ion Tracks in Apatite and Quartz: And Their Behaviour with Temperature and Pressure*. in Springer Theses. Cham: Springer International Publishing, 2018. doi: 10.1007/978-3-319-96283-2.

[9] L. T. D. Thalles *et al.*, “Emulating Radiation-Induced Defect Microstructures by Neutrons and Dark Matter Using Ions,” Queen’s University, Kingston, ON, 2026.

[10] “Reactor Materials Testing Laboratory | Queen’s University.” Accessed: Nov. 24, 2025. [Online]. Available: https://rmtl.engineering.queensu.ca/

[11] “PROTON IRRADIATION SAMPLE HOLDER II (PISH II).” Accessed: Mar. 26, 2026. [Online]. Available: https://queensu.scholaris.ca/items/0001bd7f-02a0-4326-97d1-3231e1b2e668

[12] M. Mattucci, “Mechanical Testing and Characterization of Proton Irradiated 99.4% NI Using the Reactor Materials Testing Laboratory,” Dec. 2017, Accessed: Mar. 26, 2026. [Online]. Available: http://hdl.handle.net/1974/23761

[13] J. Als-Nielsen, *Elements of Modern X-Ray Physics*, vol. 55. 2002. doi: 10.1002/9781119998365.

[14] “Olivine | Mineral, Rock & Magma | Britannica.” Accessed: Nov. 23, 2025. [Online]. Available: https://www.britannica.com/science/olivine

[15] “Introduction To Dislocations (all content).” Accessed: Nov. 23, 2025. [Online]. Available: https://www.doitpoms.ac.uk/tlplib/dislocations/printall.php

[16] K. Nordlund *et al.*, “Primary radiation damage: A review of current understanding and models,” *Journal of Nuclear Materials*, vol. 512, pp. 450–479, Dec. 2018, doi: 10.1016/j.jnucmat.2018.10.027.

[17] “Frenkel-Defect.” Accessed: Nov. 23, 2025. [Online]. Available: https://byjus.com/chemistry/frenkel-defect/

[18] P. Sigmund, “Stopping power in perspective,” *Nuclear Instruments and Methods in Physics Research Section B: Beam Interactions with Materials and Atoms*, vol. 135, no. 1, pp. 1–15, Feb. 1998, doi: 10.1016/S0168-583X(97)00638-1.

[19] J. F. Zigler, J. P. Biersack, and M. D. Ziegler, *SRIM - The Stopping and Range of Ions in Matter*. SRIM Company, 2008. Accessed: Oct. 08, 2025. [Online]. Available: http://www.srim.org/SRIM%20Book.htm

[20] J. S. Green *et al.*, “Scintillator-based ion beam profiler for diagnosing laser-accelerated ion beams,” in *Laser Acceleration of Electrons, Protons, and Ions; and Medical Applications of Laser-Generated Secondary Sources of Radiation and Particles*, SPIE, May 2011, pp. 147–154. doi: 10.1117/12.888967.

[21] B. Afra *et al.*, “Annealing behaviour of ion tracks in olivine, apatite and britholite,” *Nuclear Instruments and Methods in Physics Research Section B: Beam Interactions with Materials and Atoms*, vol. 326, pp. 126–130, May 2014, doi: 10.1016/j.nimb.2013.10.072.

[22] A. Fung, T. Lucas, L. Balogh, M. Leybourne, and A. Vincent, “Refining the sensitivity of new physics searches with ancient minerals,” *Physical Review D*, vol. 112, Aug. 2025, doi: 10.1103/clvr-mhx5.

[23] R. A. Rymzhanov, S. A. Gorbunov, N. Medvedev, and A. Volkov, “Damage along swift heavy ion trajectory,” *Nuclear Instruments and Methods in Physics Research Section B Beam Interactions with Materials and Atoms*, vol. 404, pp. 25–35, Dec. 2018, doi: 10.1016/j.nimb.2018.11.034.

[24] M. J. Norgett, M. T. Robinson, and I. M. Torrens, “A proposed method of calculating displacement dose rates,” *Nuclear Engineering and Design*, vol. 33, no. 1, pp. 50–54, Aug. 1975, doi: 10.1016/0029-5493(75)90035-7.

[25] “Queen’s Reactor Materials Testing Laboratory.” Accessed: Dec. 02, 2025. [Online]. Available: https://queensu.ca.panopto.com/Panopto/Pages/Viewer.aspx?id=692c967c-1e98-4316-8cd4-af51014716ea

[26] H. Versteeg and W. Malalasekera, *Introduction To Computational Fluid Dynamics. The Finite Volume Method*. Pearson Education LTD.

[27] manchestercfd, “All there is to know about different mesh types in CFD!,” ManchesterCFD Team. Accessed: Nov. 23, 2025. [Online]. Available: https://www.manchestercfd.co.uk/post/all-there-is-to-know-about-different-mesh-types-in-cfd

[28] J. Guyer, D. Wheeler, and J. Warren, “FiPy: Partial Differential Equations with Python,” *Computing in Science and Engineering*, vol. 11, pp. 6–15, May 2009, doi: 10.1109/MCSE.2009.52.

[29] “FiPy Manual.” Accessed: Nov. 23, 2025. [Online]. Available: https://pages.nist.gov/fipy/en/master/_downloads/fipy.pdf

[30] C. V. Madhusudana, *Thermal Contact Conductance*. Springer International Publishing, 2013.

[31] S. L. Nidhin, S. C. Joshi, C. P. Paul, V. K. Senecha, N. K. Sharma, and G. V. Kane, “An efficient algorithm for computation of spatial heat generation during interaction of high energy proton beam with target materials,” *Nuclear Instruments and Methods in Physics Research Section B: Beam Interactions with Materials and Atoms*, vol. 461, pp. 16–24, Dec. 2019, doi: 10.1016/j.nimb.2019.09.016.

[32] “Ansys | Engineering Simulation Software.” Accessed: Nov. 23, 2025. [Online]. Available: https://www.ansys.com/

[33] “Home | The official CERN FLUKA website.” Accessed: Nov. 23, 2025. [Online]. Available: https://fluka.cern/

[34] “James Ziegler - SRIM & TRIM.” Accessed: Nov. 23, 2025. [Online]. Available: http://www.srim.org/

[35] F. Salvat, “Bethe stopping-power formula and its corrections,” *Phys. Rev. A*, vol. 106, no. 3, p. 032809, Sep. 2022, doi: 10.1103/PhysRevA.106.032809.

[36] C. Geuzaine and J.-F. Remacle, “Gmsh: A 3-D finite element mesh generator with built-in pre- and post-processing facilities,” *International Journal for Numerical Methods in Engineering*, vol. 79, no. 11, pp. 1309–1331, 2009, doi: 10.1002/nme.2579.

[37] N. Schlömer, *pyfvm: Finite volume discretizations for Python*. Python. [OS Independent]. Available: https://pypi.org/project/pyfvm/

[38] “The PyRADISE package - PyRADISE (Python RAdial DIffusion and Stability Evolution).” Accessed: Mar. 26, 2026. [Online]. Available: https://pyradise.web.cern.ch/package/

[39] “PEP 8 – Style Guide for Python Code | peps.python.org,” Python Enhancement Proposals (PEPs). Accessed: Feb. 12, 2026. [Online]. Available: https://peps.python.org/pep-0008/

[40] K. Gao, *KevinGQueensU/Beam-Irradiation-Heat-Software*. (Apr. 02, 2026). Python. Accessed: Apr. 02, 2026. [Online]. Available: https://github.com/KevinGQueensU/Beam-Irradiation-Heat-Software

[41] S. Goes, D. Hasterok, D. Schutt, and M. Klöcking, “Continental lithospheric temperatures: A review,” *Physics of the Earth and Planetary Interiors*, vol. 306, p. 106509, May 2020, doi: 10.1016/j.pepi.2020.106509.

[42] R. A. Robie and B. S. Hemingway, “Thermodynamic properties of minerals and related substances at 298.15 K and 1 bar (10^5 pascals) pressure and at higher temperatures,” U.S. G.P.O. ; For sale by U.S. Geological Survey, Information Services, 2131, 1995. doi: 10.3133/b2131.

[43] N. Chatterjee, “Evaluation of thermochemical data on Fe-Mg olivine, orthopyroxene, spinel and Ca-Fe-Mg-Al garnet,” *Geochimica et Cosmochimica Acta*, vol. 51, no. 9, pp. 2515–2525, Sep. 1987, doi: 10.1016/0016-7037(87)90302-4.

[44] A. D. Polyanin and V. E. Nazaikinskii, *Handbook of Linear Partial Differential Equations for Engineers and Scientists, Second Edition - Maplesoft Books*. Chapman and Hall/CRC, 2016. Accessed: Mar. 26, 2026. [Online]. Available: https://www.maplesoft.com/books/details.aspx?id=570&ref=facebook

[45] “Radiation Heat Transfer.” Accessed: Mar. 26, 2026. [Online]. Available: https://www.engineeringtoolbox.com/radiation-heat-transfer-d_431.html

[46] N. F. de Carvalho, C. H. Marchi, and C. de T. Perstchi, “METHODS FOR CALCULATING THE THERMAL CONDUCTIVITY AT THE CONTROL-VOLUME SURFACES,” *ABCM*, 2013.

[47] R. Martinez, E. Abad, and E. Bilbao, “Conceptual Design of the ESS-Bilbao Materials Irradiation Laboratory,” *Proceedings of IPAC*, 2011.

[48] K. Mergia and N. Boukos, “Structural, thermal, electrical and magnetic properties of Eurofer 97 steel,” *Journal of Nuclear Materials*, vol. 373, no. 1, pp. 1–8, Feb. 2008, doi: 10.1016/j.jnucmat.2007.03.267.

[49] C. Y. Ho, R. W. Powell, and P. E. Liley, “Thermal Conductivity of the Elements,” *J. Phys. Chem. Ref. Data*, vol. 1, no. 2, pp. 279–421, Apr. 1972, doi: 10.1063/1.3253100.

[50] M. W. Chase, “NIST-JANAF Thermochemical Tables, Fourth Edition,” *J. Phys. Chem. Ref. Data, Monograph 9*, pp. 1–1951, 1998.

[51] P. Gillet, P. Richet, F. Guyot, and G. Fiquet, “High-temperature thermodynamic properties of forsterite,” *Journal of Geophysical Research: Solid Earth*, vol. 96, no. B7, pp. 11805–11816, 1991, doi: 10.1029/91JB00680.

[52] R. A. Robie, B. S. Hemingway, and H. Takei, “Heat capacities and entropies of Mg2SiO4, Mn2SiO4, and Co2SiO4 between 5 and 380 K,” *American Mineralogist*, vol. 67, no. 5–6, pp. 470–482, Jun. 1982.

[53] “Emissivity of Common Materials.” Accessed: Mar. 26, 2026. [Online]. Available: https://www.omega.co.uk/literature/transactions/volume1/emissivitya.html

[54] J. Helbert *et al.*, “Olivine thermal emissivity under extreme temperature ranges: Implication for Mercury surface,” *Earth and Planetary Science Letters*, vol. 371–372, pp. 252–257, Jun. 2013, doi: 10.1016/j.epsl.2013.03.038.

[55] “MPI for Python — MPI for Python 4.1.1 documentation.” Accessed: Mar. 26, 2026. [Online]. Available: https://mpi4py.readthedocs.io/en/stable/

[56] L. D. Dalcin, R. R. Paz, P. A. Kler, and A. Cosimo, “Parallel distributed computing using Python,” *Advances in Water Resources*, vol. 34, no. 9, pp. 1124–1139, Sep. 2011, doi: 10.1016/j.advwatres.2011.04.013.

[57] A. Srinath, “pyamgx - GPU accelerated multigrid library for Python.” Accessed: Mar. 26, 2026. [Online]. Available: https://pyamgx.readthedocs.io/en/latest/

[58] N. J. Gunther, “A General Theory of Computational Scalability Based on Rational Functions,” 2008, *arXiv*. doi: 10.48550/ARXIV.0808.1431.

[59] S. J. Heselius, D. J. Schlyer, and A. P. Wolf, “A diagnostic study of proton-beam irradiated water targets,” *Int J Rad Appl Instrum A*, vol. 40, no. 8, pp. 663–669, 1989, doi: 10.1016/0883-2889(89)90075-0.

[60] M. Barberio, M. Scisciò, S. Vallières, S. Veltri, A. Morabito, and P. Antici, “Laser-Generated Proton Beams for High-Precision Ultra-Fast Crystal Synthesis,” *Sci Rep*, vol. 7, no. 1, p. 12522, Oct. 2017, doi: 10.1038/s41598-017-12782-w.

[61] S. Patankar, *Numerical Heat Transfer and Fluid Flow*. Boca Raton: CRC Press, 2018. doi: 10.1201/9781482234213.

[62] G. Santillanes and R. M. Felder, “Software Piracy in Research: A Moral Analysis,” *Sci Eng Ethics*, vol. 21, no. 4, pp. 967–977, Aug. 2015, doi: 10.1007/s11948-014-9573-5.

[63] S. J. Jepeal, L. Snead, and Z. S. Hartwig, “Intermediate energy proton irradiation: Rapid, high-fidelity materials testing for fusion and fission energy systems,” *Materials & Design*, vol. 200, p. 109445, Feb. 2021, doi: 10.1016/j.matdes.2020.109445.

[64] “Instrument Fees – Michigan Ion Beam Laboratory.” Accessed: Mar. 26, 2026. [Online]. Available: https://mibl.engin.umich.edu/work-mibl/instrument-fees/

[65] R. A. Holt and M. R. Daymond, “A New Nuclear Materials Laboratory at Queen’s University,” *Proceedings of the Canadian Nuclear Society*, May 2015, Accessed: Mar. 26, 2026. [Online]. Available: https://proceedings.cns-snc.ca/index.php/pcns/article/view/6873

[66] “Miller Museum of Geology | Queen’s University.” Accessed: Mar. 26, 2026. [Online]. Available: https://www.queensu.ca/millermuseumofgeology/

[67] “Prices | Facility for Isotope Research.” Accessed: Mar. 26, 2026. [Online]. Available: https://www.queensu.ca/isotope-research/prices