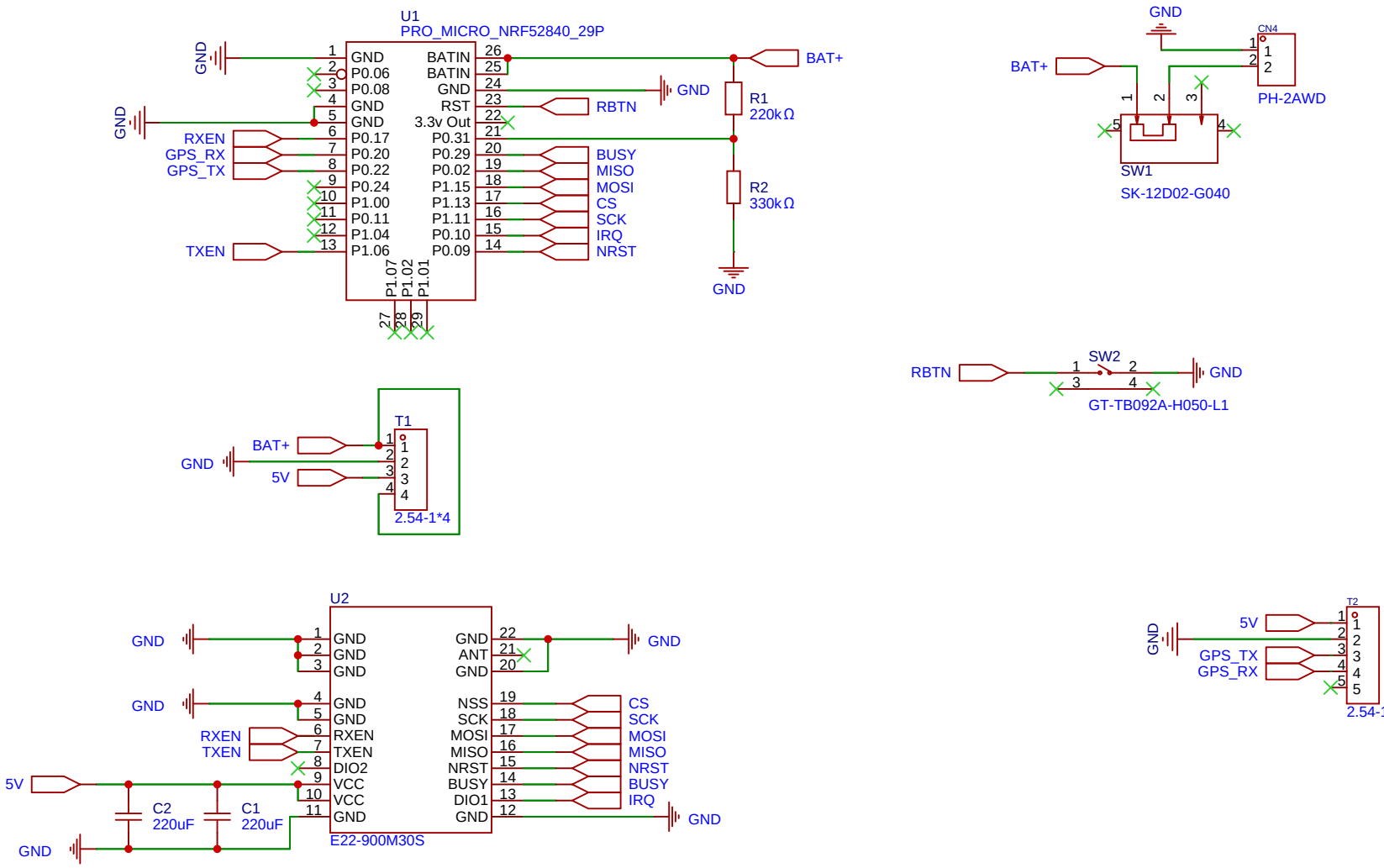

Schematic	ProMicro-1W R1.2	Update Date	2024-11-10
		Create Date	2024-11-09
Page	P1	Part Number	JLC
Drawn	KevinK	ProMicro-1W	
Reviewed	KevinK		
		VER	SIZE	PAGE 1 OF 1
EasyEDA		V1	A4	MeshHardware