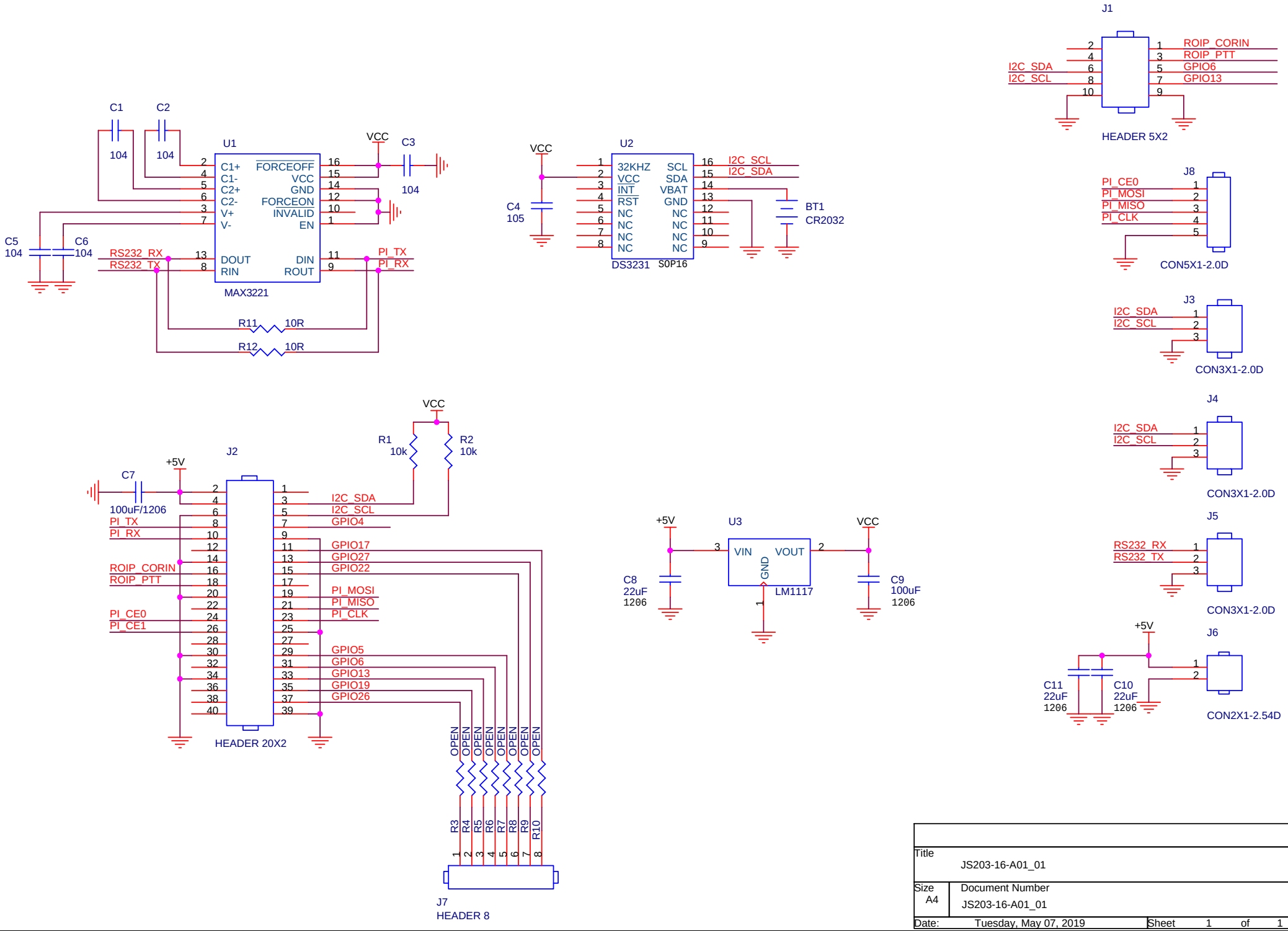


| | | |
|---|---|---|
| Title | JS203-16-A01_01 | |
| Size A4 | Document Number JS203-16-A01_01 | Rev 01 |
| Date: Tuesday, May 07, 2019 | Sheet 1 of 1 | |