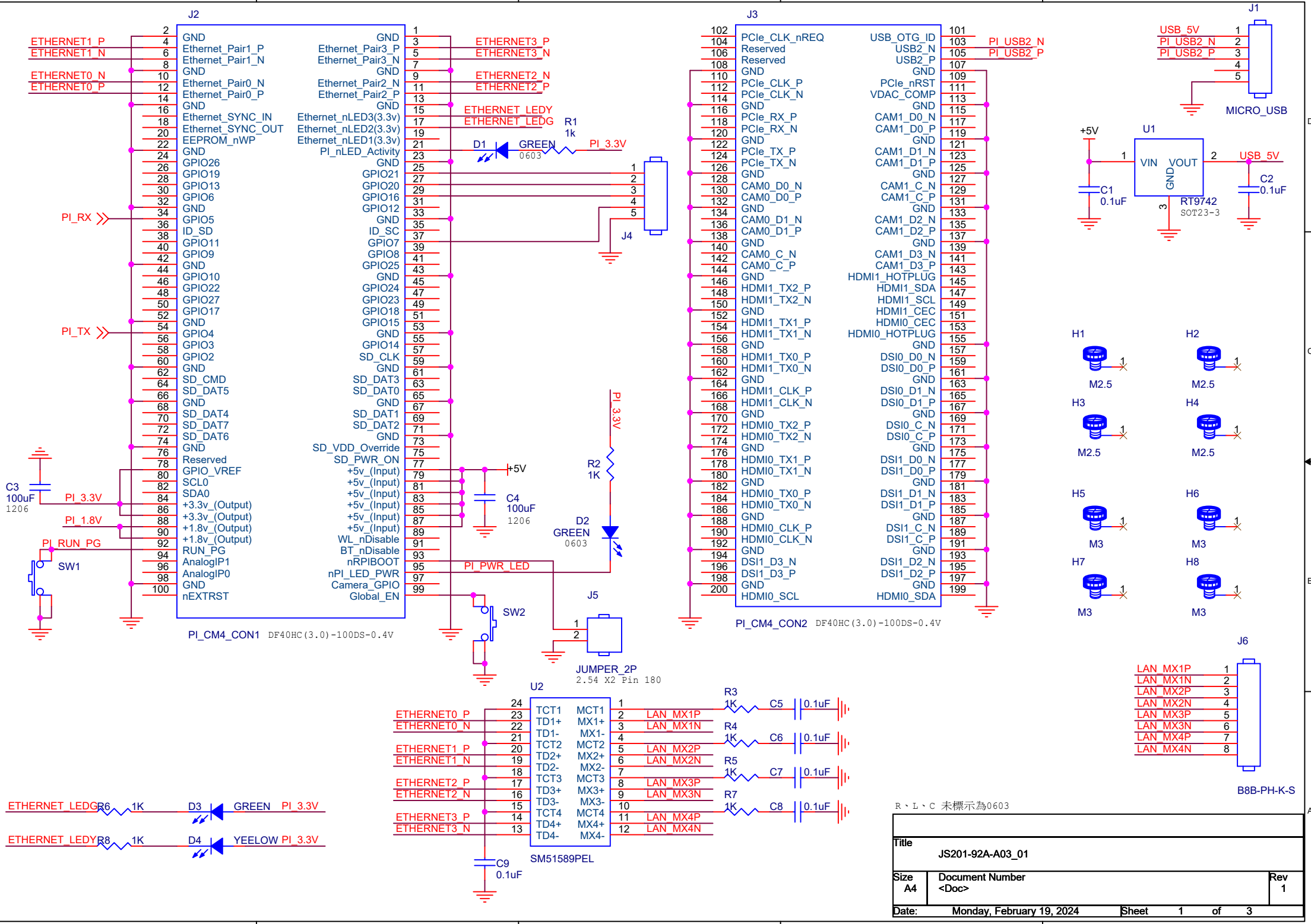
J2
PI_CM4_CON1 DF40HC(3.0)-100DS-0.4V
J3
PI_CM4_CON2 DF40HC(3.0)-100DS-0.4V
J1
MICRO_USB
U1
RT9742
SOT23-3
H1
H2
H3
H4
H5
H6
H7
H8
M2.5
M3
J4
J5
JUMPER_2P
2.54 X2 Pin 180
SW1
SW2
D1
D2
GREEN
0603
R1
1k
R2
1K
C3
100uF
1206
C4
100uF
1206
C1
0.1uF
C2
0.1uF
U2
SM51589PEL
C9
0.1uF
R3
R4
R5
R7
C5
C6
C7
C8
0.1uF
J6
B8B-PH-K-S
ETHERNET_LEDG
ETHERNET_LEDY
R6
R8
1K
D3
D4
YEELOW
R、L、C 未標示為0603
Title
JS201-92A-A03_01
Size
A4
Document Number
<Doc>
Rev
1
Date:
Monday, February 19, 2024
Sheet
1
of
3

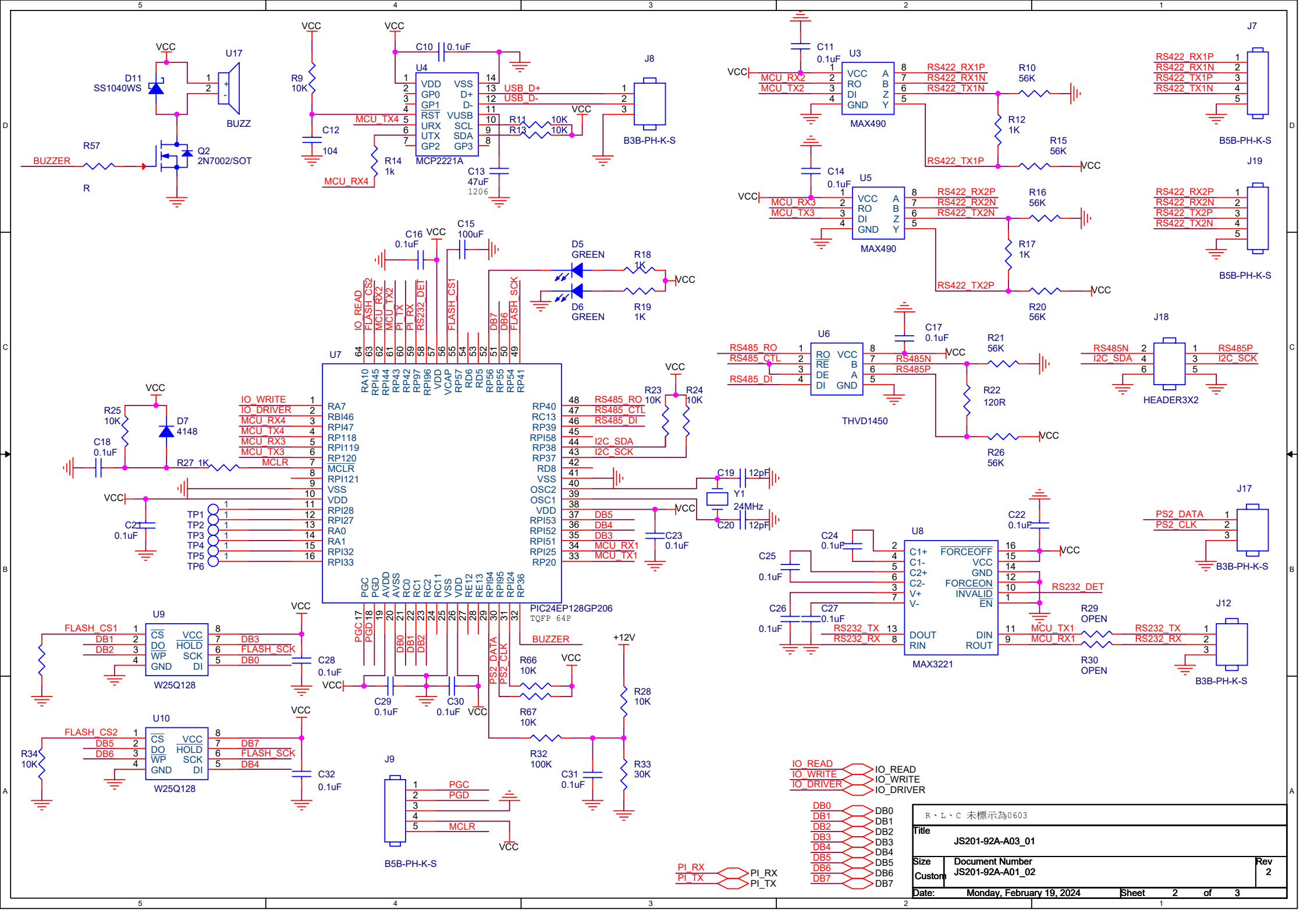
U17
BUZZ
D11
SS1040WS
VCC
R57
BUZZER
R
Q2
2N7002/SOT
R9
10K
C12
104
U4
MCP2221A
VDD
GP0
GP1
RST
URX
UTX
GP2
VSS
D+
D-
VUSB
SCL
SDA
GP3
C10
0.1uF
USB_D+
USB_D-
MCU_TX4
MCU_RX4
R14
1k
R11
R13
10K
C13
47uF
1206
J8
B3B-PH-K-S
U3
MAX490
VCC
RO
DI
GND
A
B
Z
Y
MCU_RX2
MCU_TX2
C11
0.1uF
RS422_RX1P
RS422_RX1N
RS422_TX1N
RS422_TX1P
R10
56K
R12
1K
R15
56K
J7
B5B-PH-K-S
U5
MCU_RX3
MCU_TX3
C14
0.1uF
RS422_RX2P
RS422_RX2N
RS422_TX2N
RS422_TX2P
R16
56K
R17
1K
R20
56K
J19
B5B-PH-K-S
C16
0.1uF
C15
100uF
D5
GREEN
D6
GREEN
R18
1K
R19
1K
U7
PIC24EP128GP206
TQFP 64P
IO_READ
FLASH_CS2
MCU_RX2
MCU_TX2
PI_TX
PI_RX
RS232_DET
FLASH_CS1
DB7
DB6
FLASH_SCK
IO_WRITE
IO_DRIVER
MCU_RX4
MCU_TX4
MCU_RX3
MCU_TX3
MCLR
RS485_RO
RS485_CTL
RS485_DI
I2C_SDA
I2C_SCK
DB5
DB4
DB3
MCU_RX1
MCU_TX1
BUZZER
PS2_DATA
PS2_CLK
R25
10K
D7
4148
C18
0.1uF
R27 1K
C21
0.1uF
TP1
TP2
TP3
TP4
TP5
TP6
R23
10K
R24
10K
C19
12pF
Y1
24MHz
C20
12pF
C23
0.1uF
U6
THVD1450
RO
RE
DE
DI
VCC
B
A
GND
RS485_RO
RS485_CTL
RS485_DI
RS485N
RS485P
C17
0.1uF
R21
56K
R22
120R
R26
56K
J18
HEADER3X2
RS485N
I2C_SDA
RS485P
I2C_SCK
U8
MAX3221
C1+
C1-
C2+
C2-
V+
V-
FORCEOFF
VCC
GND
FORCEON
INVALID
EN
DOUT
RIN
DIN
ROUT
C24
0.1uF
C25
0.1uF
C26
0.1uF
C27
0.1uF
C22
0.1uF
RS232_TX
RS232_RX
RS232_DET
MCU_TX1
MCU_RX1
R29
OPEN
R30
OPEN
J17
PS2_DATA
PS2_CLK
B3B-PH-K-S
J12
B3B-PH-K-S
U9
W25Q128
CS
DO
WP
GND
HOLD
SCK
DI
FLASH_CS1
DB1
DB2
DB3
FLASH_SCK
DB0
C28
0.1uF
C29
0.1uF
C30
0.1uF
R66
10K
R67
10K
R32
100K
+12V
R28
10K
R33
30K
C31
0.1uF
U10
W25Q128
FLASH_CS2
DB5
DB6
DB7
FLASH_SCK
DB4
R34
10K
C32
0.1uF
J9
B5B-PH-K-S
PGC
PGD
MCLR
IO_READ
IO_WRITE
IO_DRIVER
DB0
DB1
DB2
DB3
DB4
DB5
DB6
DB7
PI_RX
PI_TX
R、L、C 未標示為0603
Title
JS201-92A-A03_01
Size
Custom
Document Number
JS201-92A-A01_02
Rev
2
Date:
Monday, February 19, 2024
Sheet
2
of
3

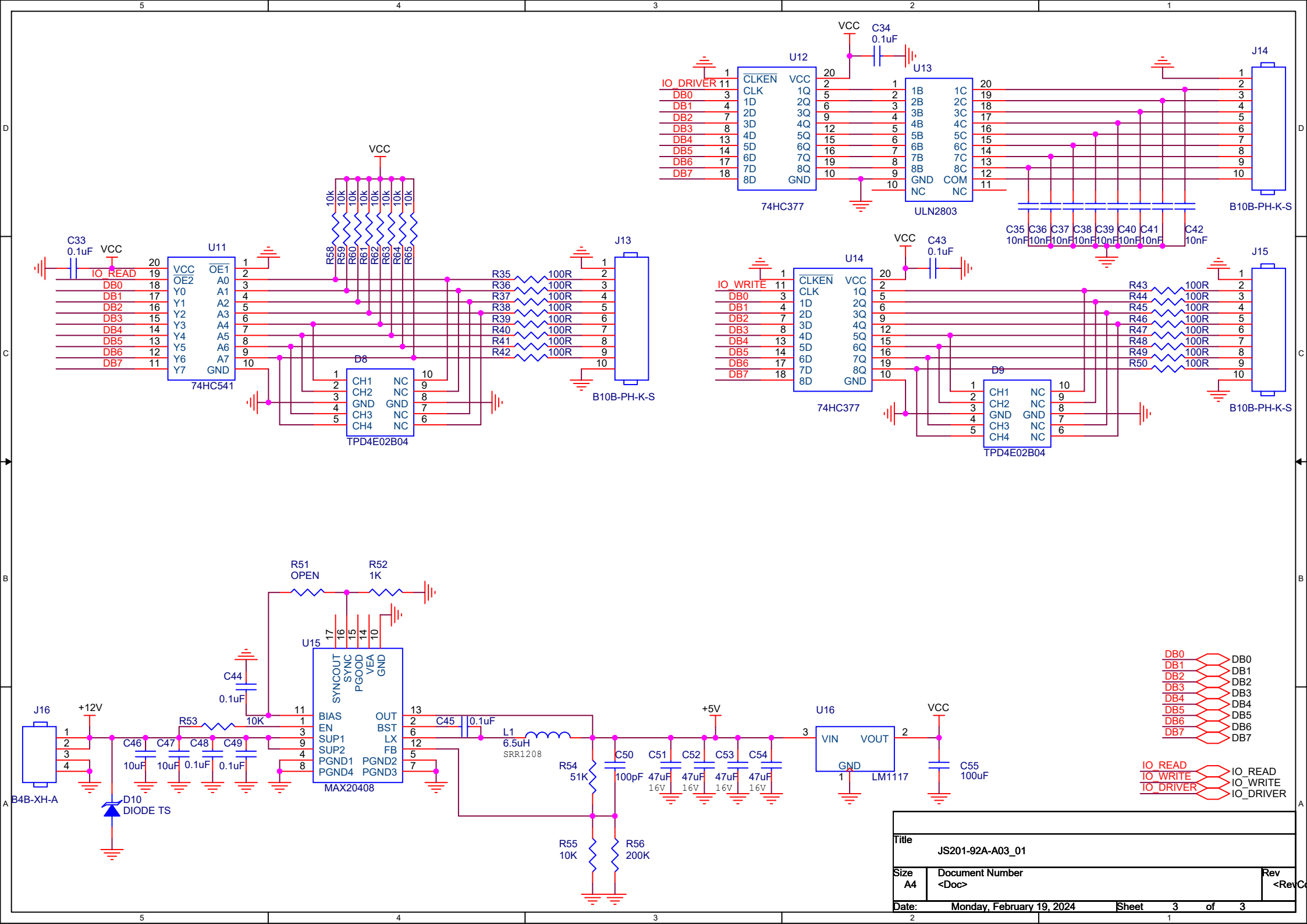

Title	JS201-92A-A03_01	
Size A4	Document Number <Doc>	Rev <RevC
Date: Monday, February 19, 2024	Sheet 3 of 3	

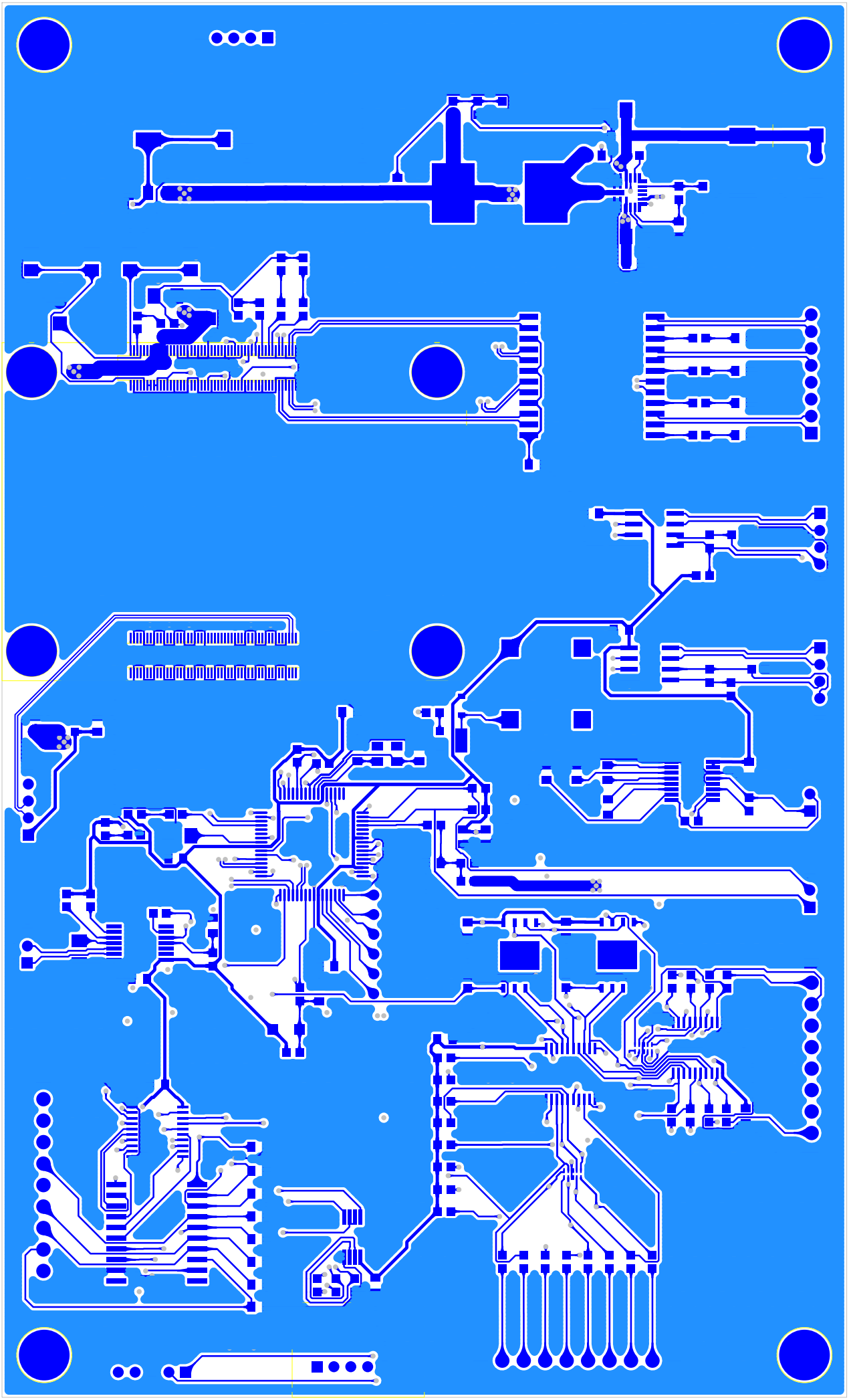

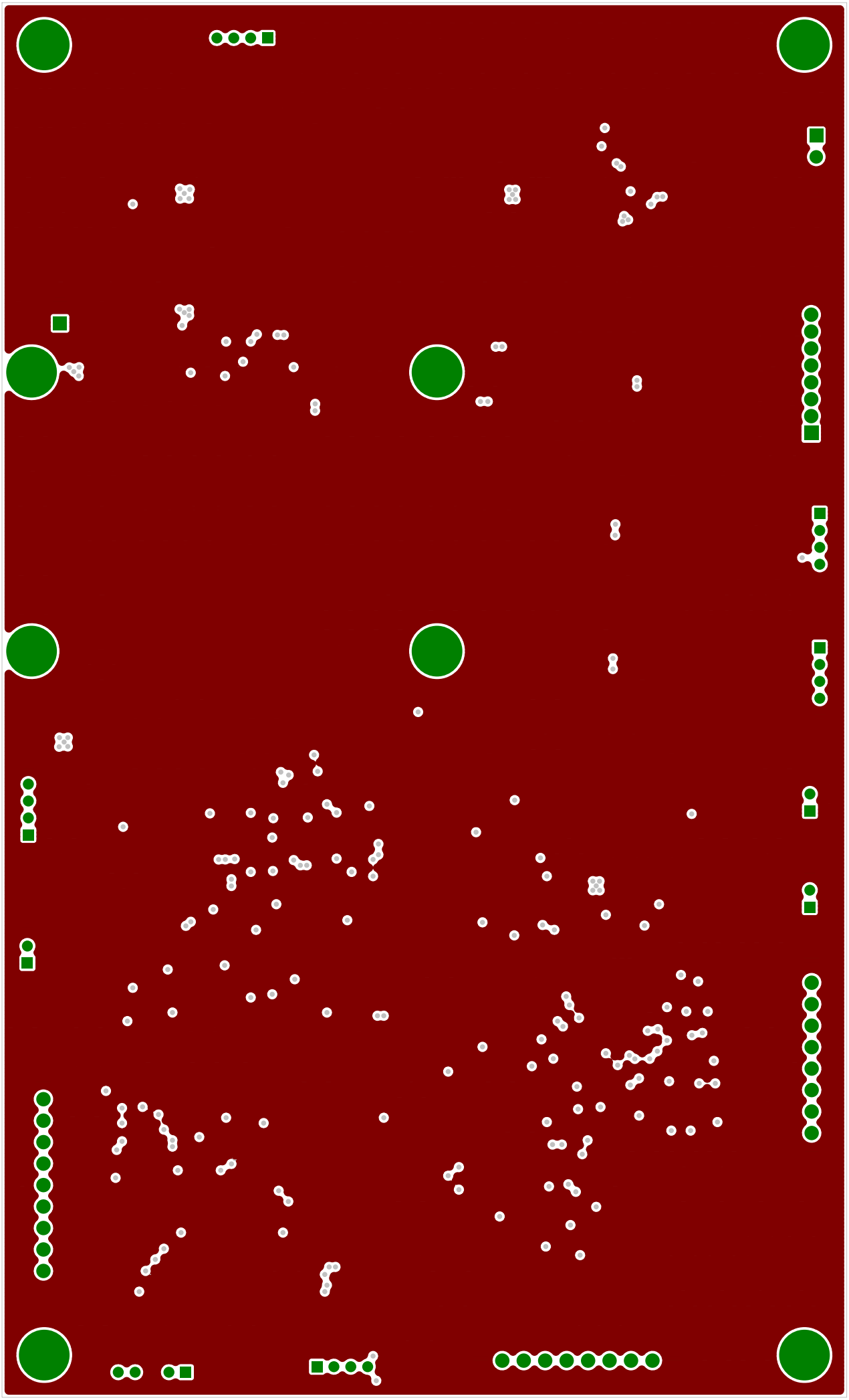

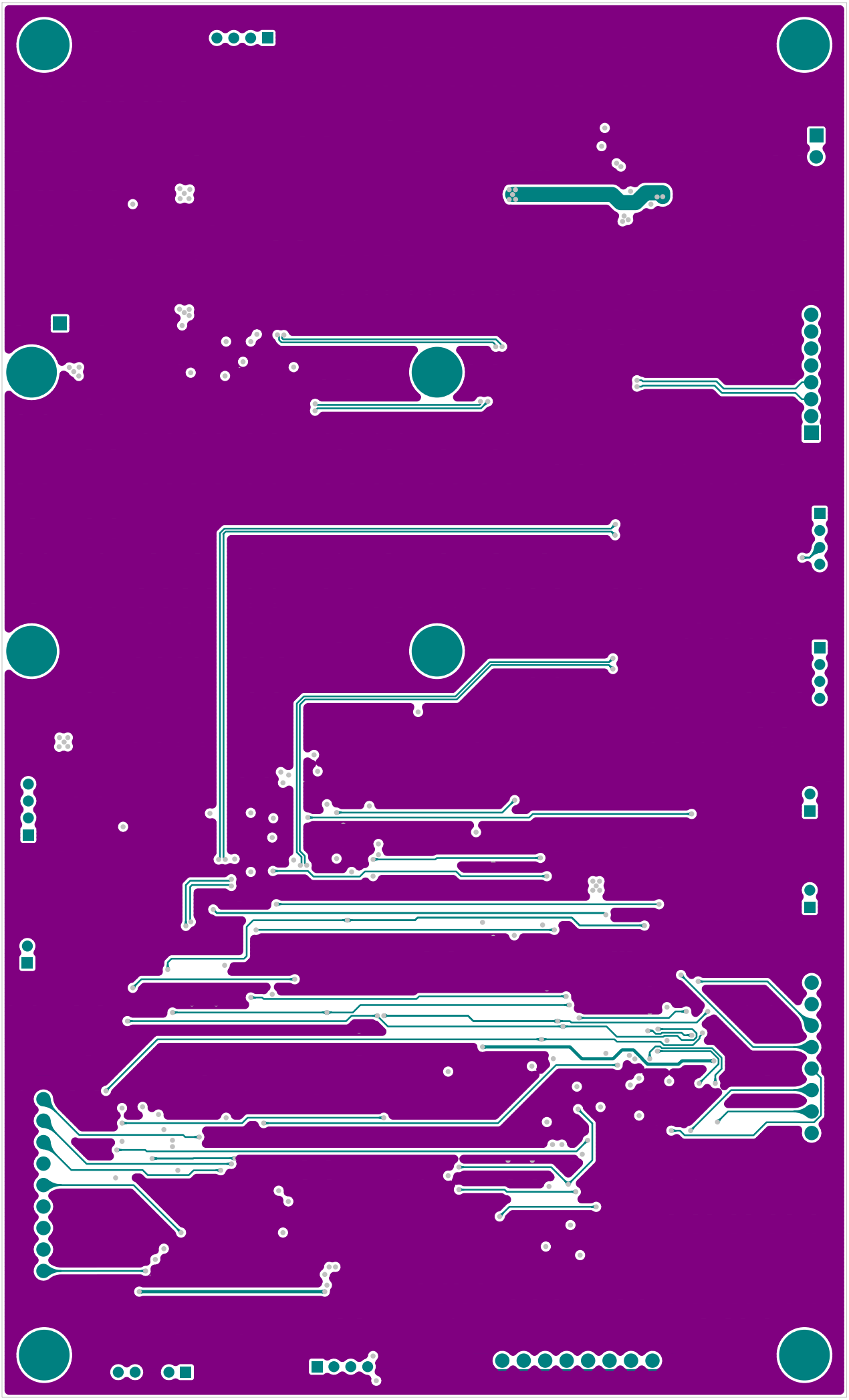

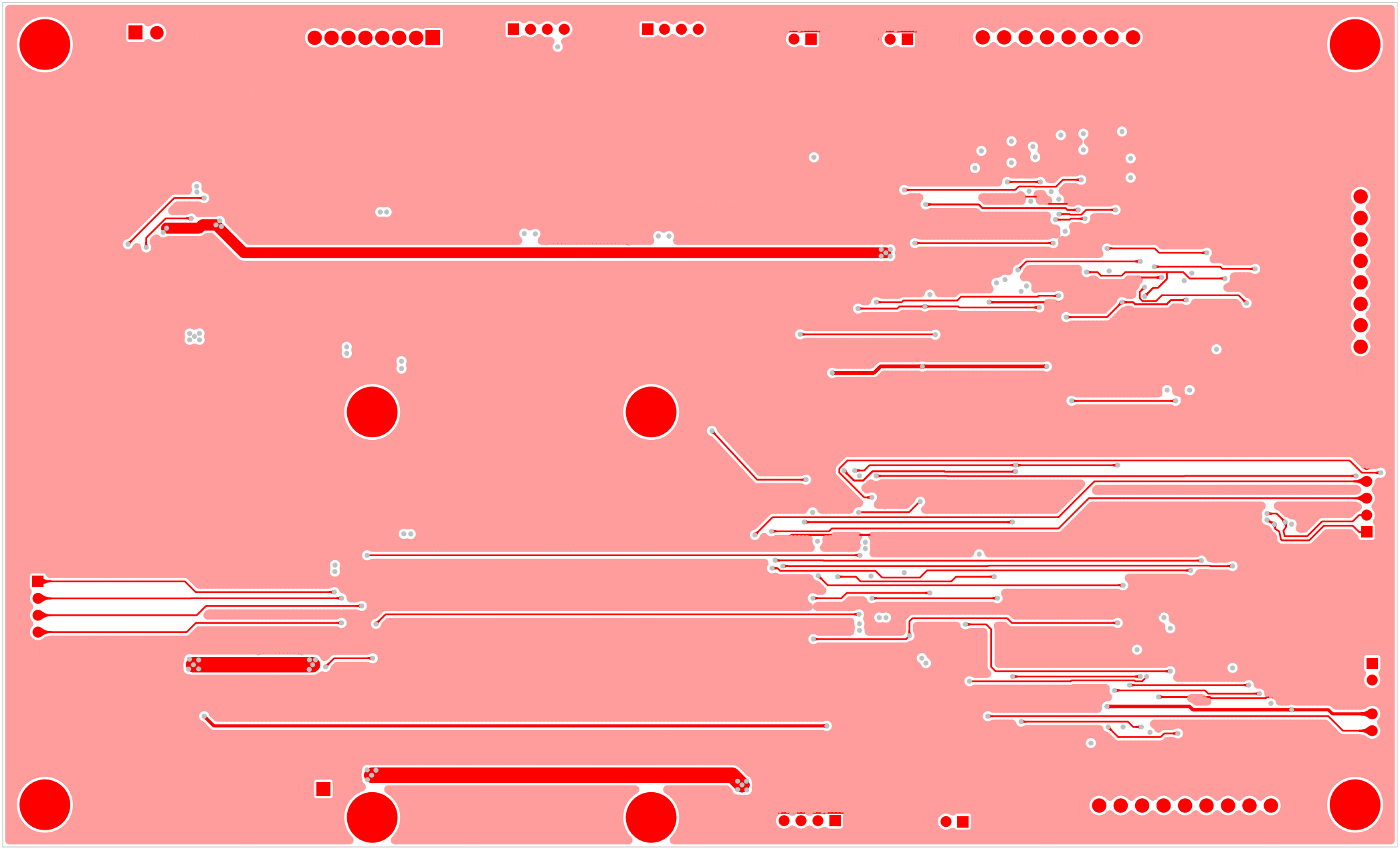

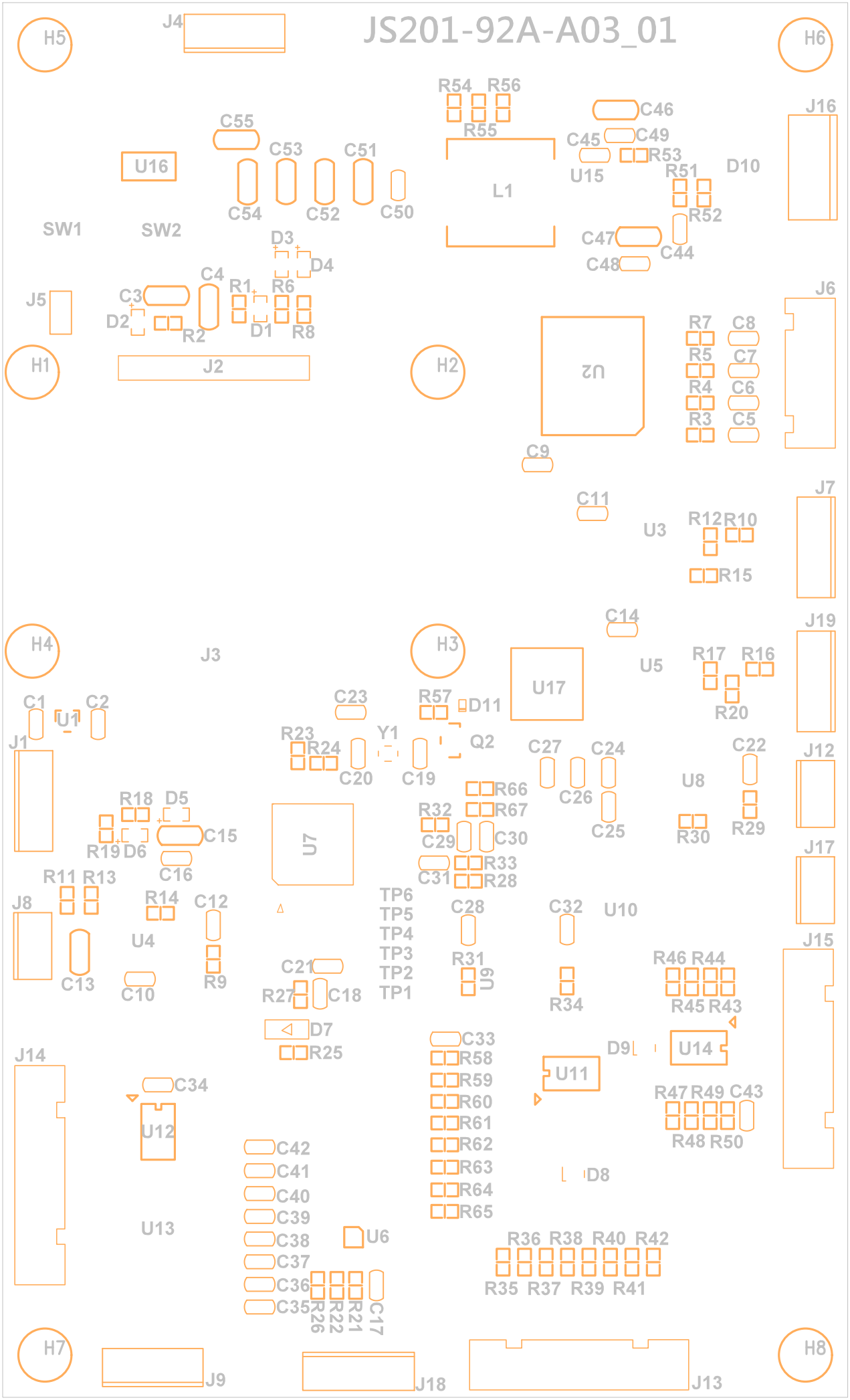
JS201-92A-A03_01
H5
J4
H6
R54 R56
R55
C46
J16
C55
C53
C51
C45
C49
R53
U16
U15
R51
D10
L1
C54
C52
C50
R52
SW1
SW2
D3
C47
C44
D4
C48
C4
R1
R6
J5
C3
D2
R2
D1
R8
J6
H1
J2
H2
U2
R7
C8
R5
C7
R4
C6
R3
C5
C9
C11
J7
U3
R12 R10
R15
C14
J19
H4
J3
H3
U17
U5
R17 R16
R20
C1
C2
U1
C23
R57
D11
J1
R23
R24
Y1
Q2
C27
C24
C22
J12
C20
C19
C26
U8
R66
R18
D5
R32
R67
C25
R29
C15
U7
C29
C30
R30
R19
D6
R33
J17
C16
C31
R28
R11 R13
TP6
TP5
TP4
TP3
TP2
TP1
C28
C32
U10
J8
R14
C12
U4
R31
U9
J15
C13
C10
R9
C21
R27
C18
R34
R46 R44
R45 R43
D7
R25
C33
R58
R59
R60
R61
R62
R63
R64
R65
D9
U14
J14
C34
U11
R47 R49 C43
U12
R48 R50
C42
C41
C40
C39
C38
C37
C36
C35
D8
U13
U6
R36 R38 R40 R42
R35 R37 R39 R41
R26
R22
R21
C17
H7
J9
J18
J13
H8

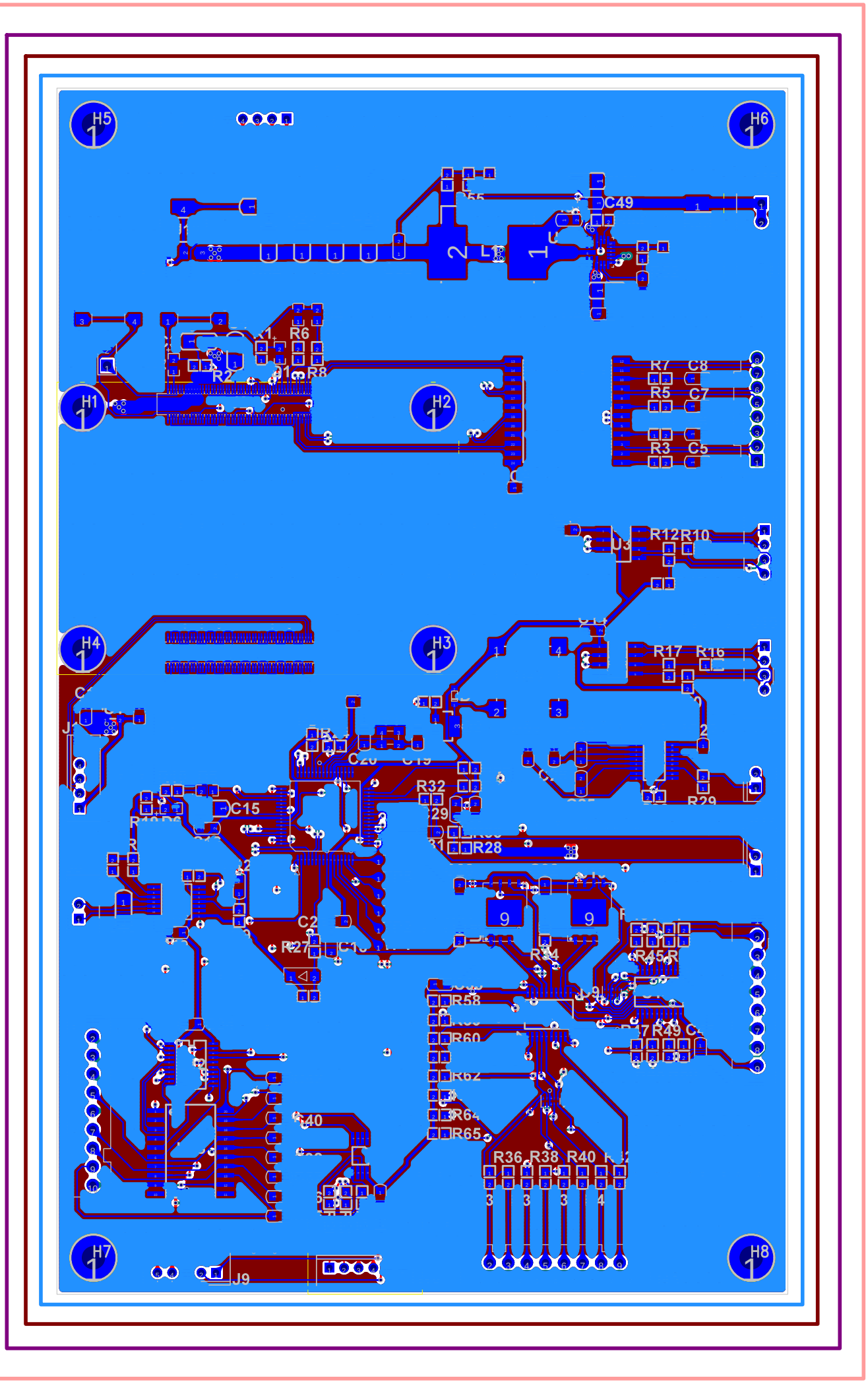
H5
H6
H1
H2
H4
H3
H7
H8
C49
R6
R2
R8
R7
C8
R5
C7
R3
C5
R12
R10
R17
R16
R32
R29
R28
C15
C2
R27
R34
R45
R58
R60
R62
R64
R65
R36
R38
R40
R49
J9