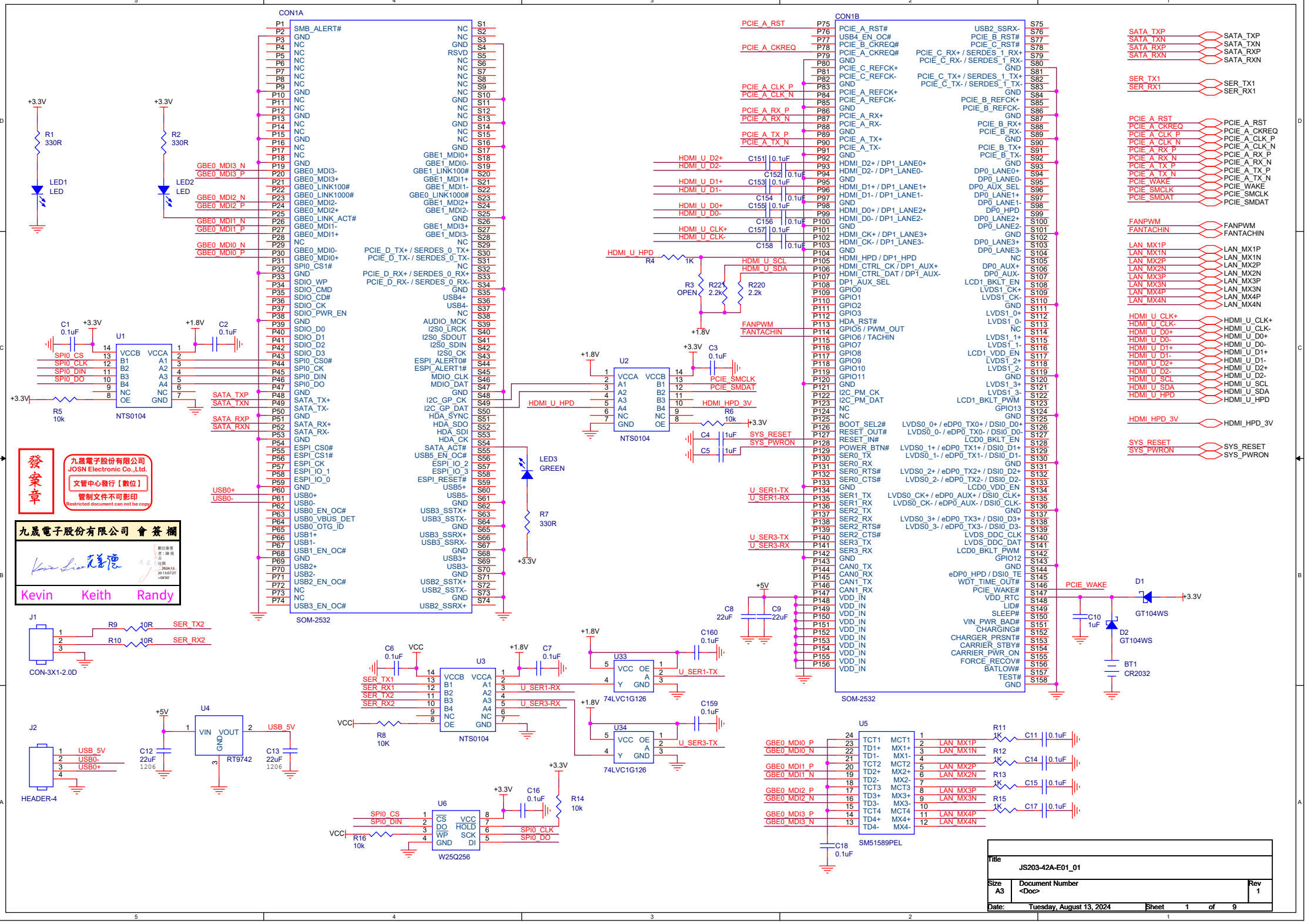
CON1A
SOM-2532
CON1B
SOM-2532
U1
NTS0104
U2
NTS0104
U3
NTS0104
U4
RT9742
U5
SM51589PEL
U6
W25Q256
U33
74LVC1G126
U34
74LVC1G126
J1
CON-3X1-2.0D
J2
HEADER-4
BT1
CR2032
D1
GT104WS
D2
GT104WS
LED1
LED
LED2
LED
LED3
GREEN
R1
330R
R2
330R
R7
330R
R5
10k
R8
10K
R14
10k
R16
10k
R3
OPEN
R4
1K
R221
2.2k
R220
2.2k
R6
10k
R9
10R
R10
10R
R11
1K
R12
1K
R13
1K
R15
1K
C1
0.1uF
C2
0.1uF
C3
0.1uF
C4
1uF
C5
1uF
C6
0.1uF
C7
0.1uF
C8
22uF
C9
22uF
C10
1uF
C11
0.1uF
C12
22uF
1206
C13
22uF
1206
C14
0.1uF
C15
0.1uF
C16
0.1uF
C17
0.1uF
C18
0.1uF
C151
0.1uF
C152
0.1uF
C153
0.1uF
C154
0.1uF
C155
0.1uF
C156
0.1uF
C157
0.1uF
C158
0.1uF
C160
0.1uF
C159
0.1uF
+3.3V
+1.8V
+5V
VCC
USB_5V
SER_TX2
SER_RX2
SER_TX1
SER_RX1
U_SER1-TX
U_SER1-RX
U_SER3-TX
U_SER3-RX
SPI0_CS
SPI0_CLK
SPI0_DIN
SPI0_DO
SATA_TXP
SATA_TXN
SATA_RXP
SATA_RXN
USB0+
USB0-
GBE0_MDI3_N
GBE0_MDI3_P
GBE0_MDI2_N
GBE0_MDI2_P
GBE0_MDI1_N
GBE0_MDI1_P
GBE0_MDI0_N
GBE0_MDI0_P
HDMI_U_HPD
HDMI_U_SCL
HDMI_U_SDA
HDMI_HPD_3V
PCIE_SMCLK
PCIE_SMDAT
SYS_RESET
SYS_PWRON
PCIE_WAKE
FANPWM
FANTACHIN
LAN_MX1P
LAN_MX1N
LAN_MX2P
LAN_MX2N
LAN_MX3P
LAN_MX3N
LAN_MX4P
LAN_MX4N
PCIE_A_RST
PCIE_A_CKREQ
PCIE_A_CLK_P
PCIE_A_CLK_N
PCIE_A_RX_P
PCIE_A_RX_N
PCIE_A_TX_P
PCIE_A_TX_N
PCIE_SMCLK
PCIE_SMDAT
SER_TX1
SER_RX1
SATA_TXP
SATA_TXN
SATA_RXP
SATA_RXN
HDMI_U_D2+
HDMI_U_D2-
HDMI_U_D1+
HDMI_U_D1-
HDMI_U_D0+
HDMI_U_D0-
HDMI_U_CLK+
HDMI_U_CLK-
發案章
九晟電子股份有限公司
JOSN Electronic Co.,Ltd.
文管中心發行【數位】
管制文件不可影印
Restricted document can not be copy
九晟電子股份有限公司 會 簽 欄
Kevin
Keith
Randy
Title
JS203-42A-E01_01
Size
A3
Document Number
<Doc>
Rev
1
Date:
Tuesday, August 13, 2024
Sheet
1
of
9

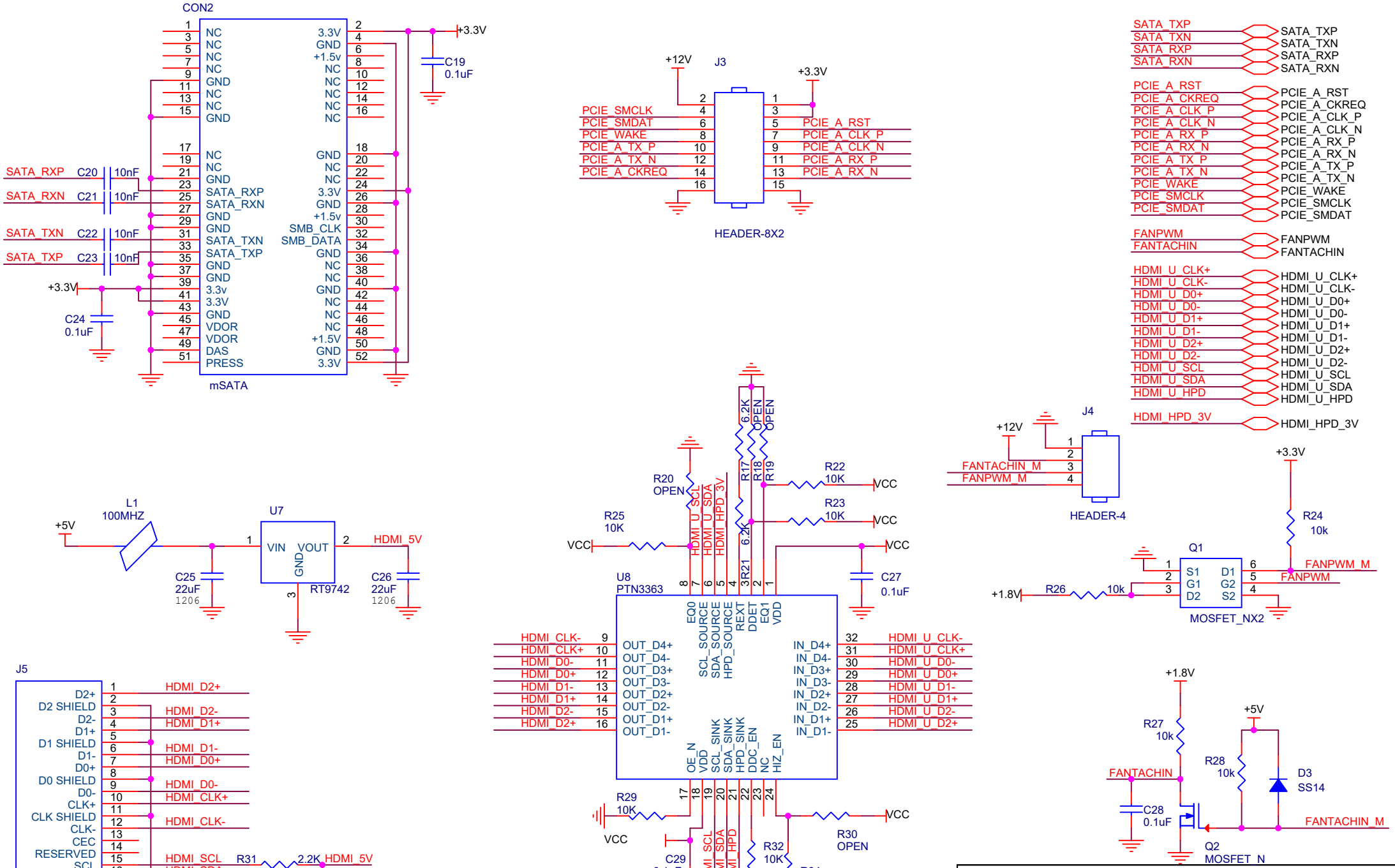

Title	JS203-42A-E01_01	
Size A4	Document Number <Doc>	Rev 1
Date: Tuesday, August 13, 2024	Sheet 2 of 9	

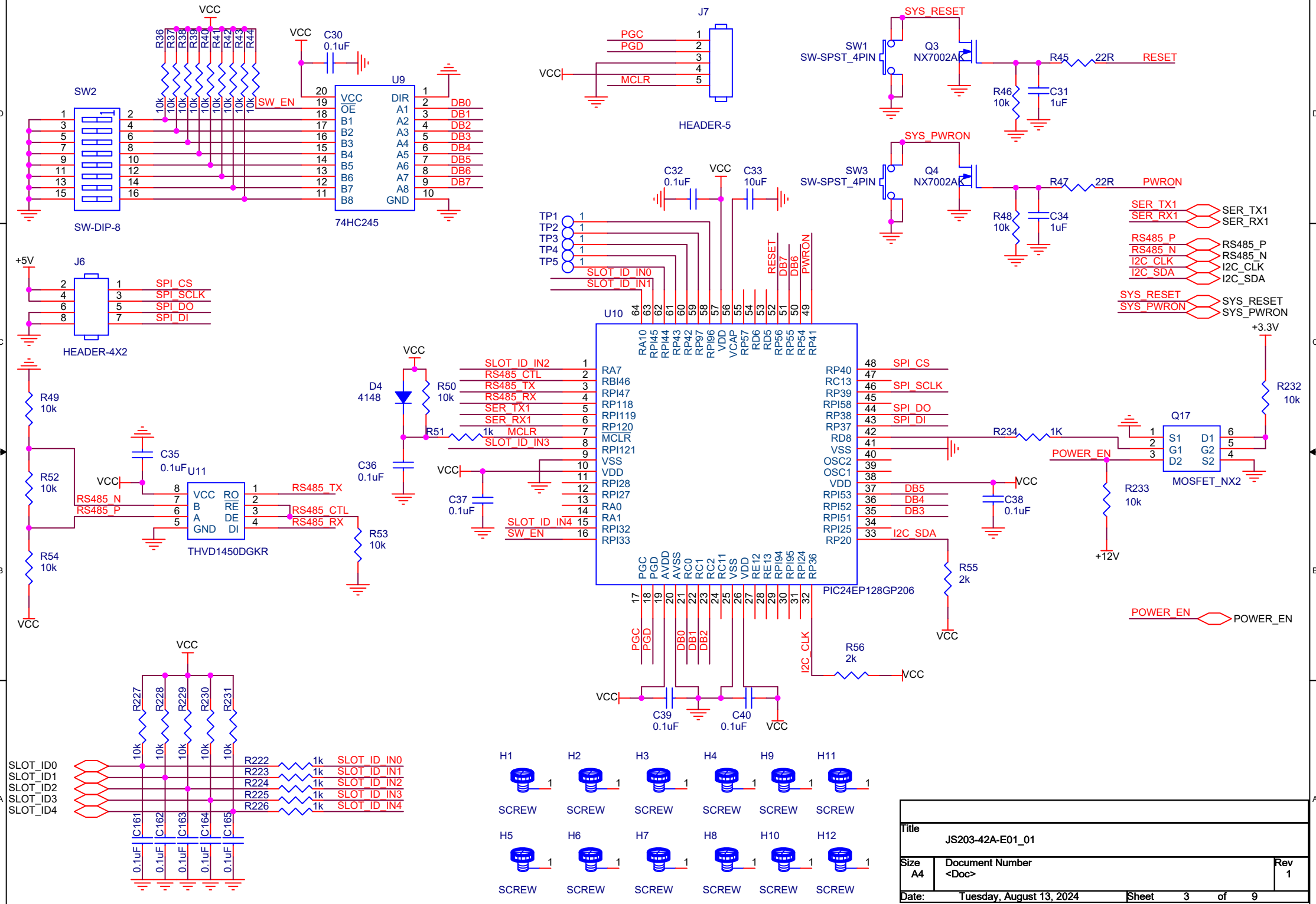

Title	JS203-42A-E01_01		
Size A4	Document Number <Doc>		Rev 1
Date: Tuesday, August 13, 2024		Sheet 3 of 9	

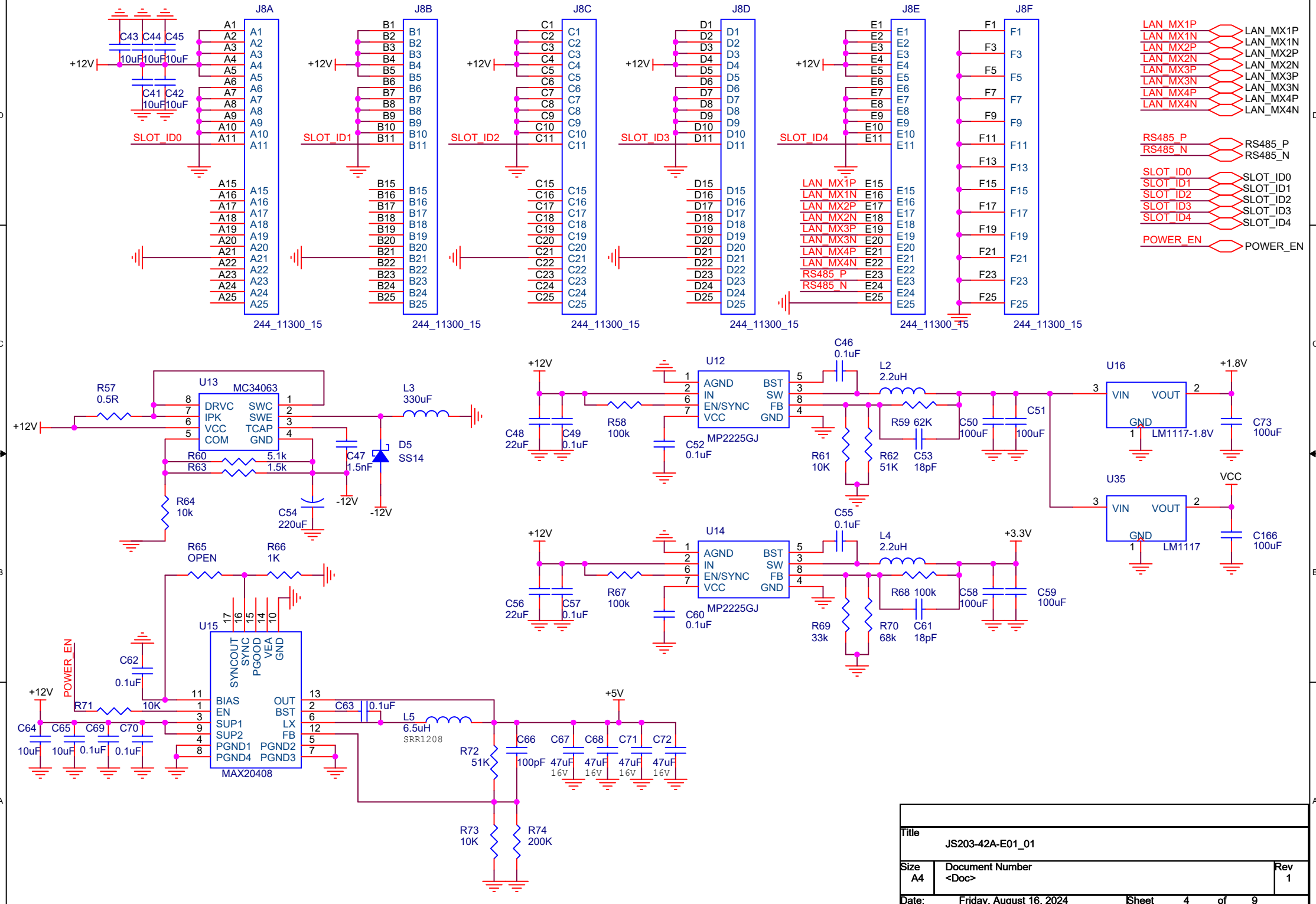

Title	JS203-42A-E01_01	
Size A4	Document Number <Doc>	Rev 1
Date: Friday, August 16, 2024	Sheet 4 of 9	

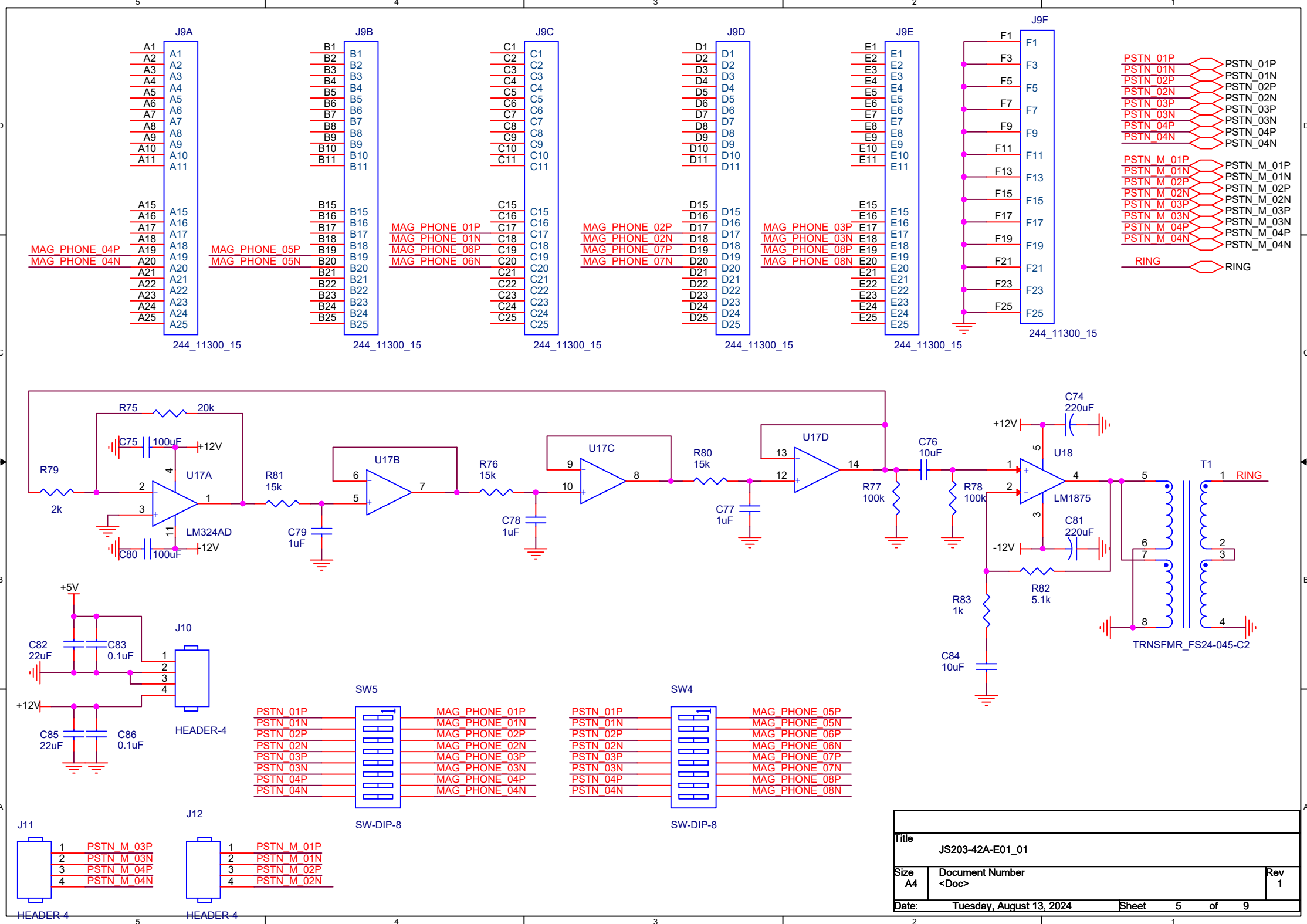

Title	JS203-42A-E01_01	
Size A4	Document Number <Doc>	Rev 1
Date: Tuesday, August 13, 2024	Sheet 5 of 9	

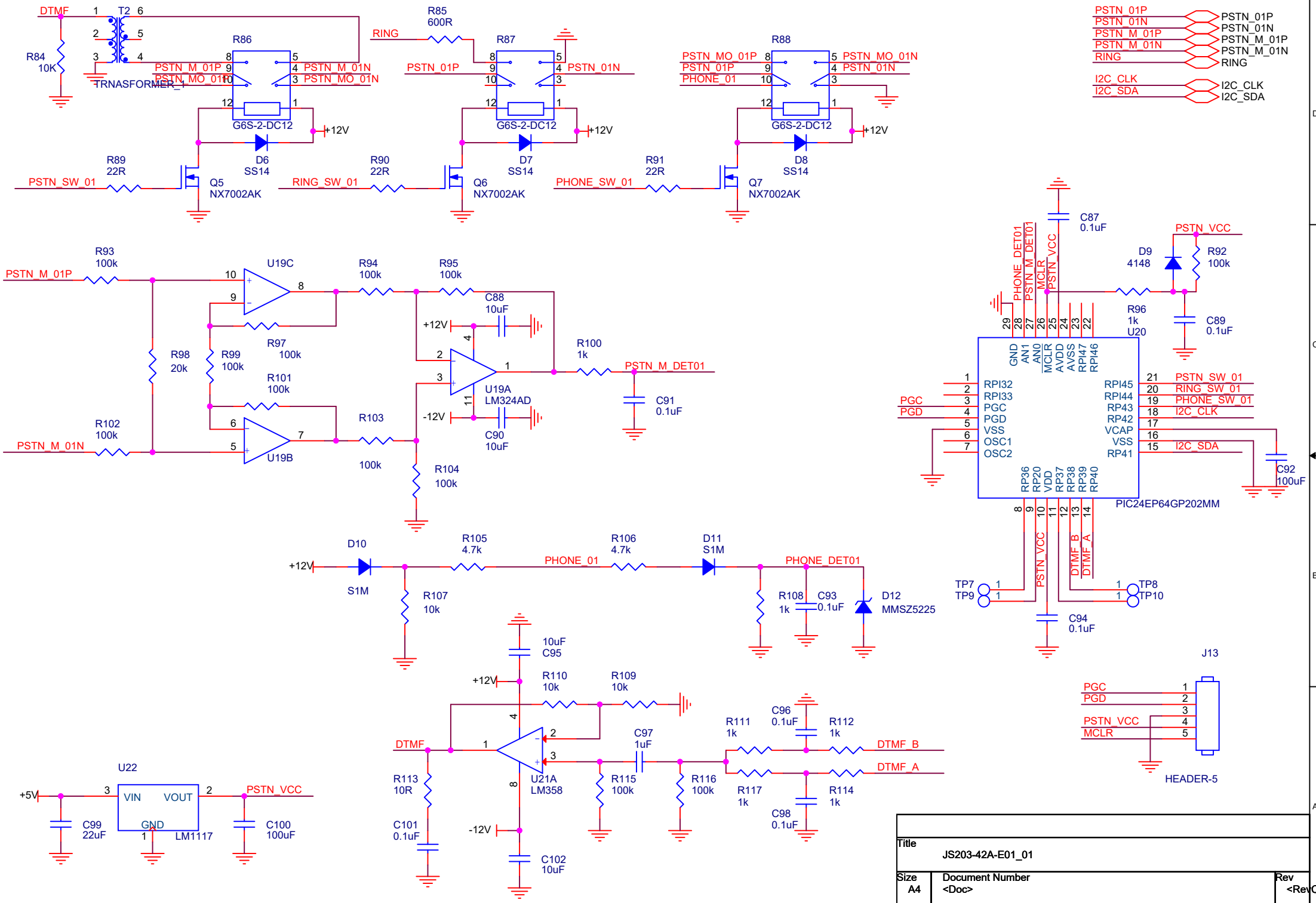

Title	JS203-42A-E01_01	
Size A4	Document Number <Doc>	Rev <RevC>
Date: Tuesday, August 13, 2024	Sheet 6 of 9	

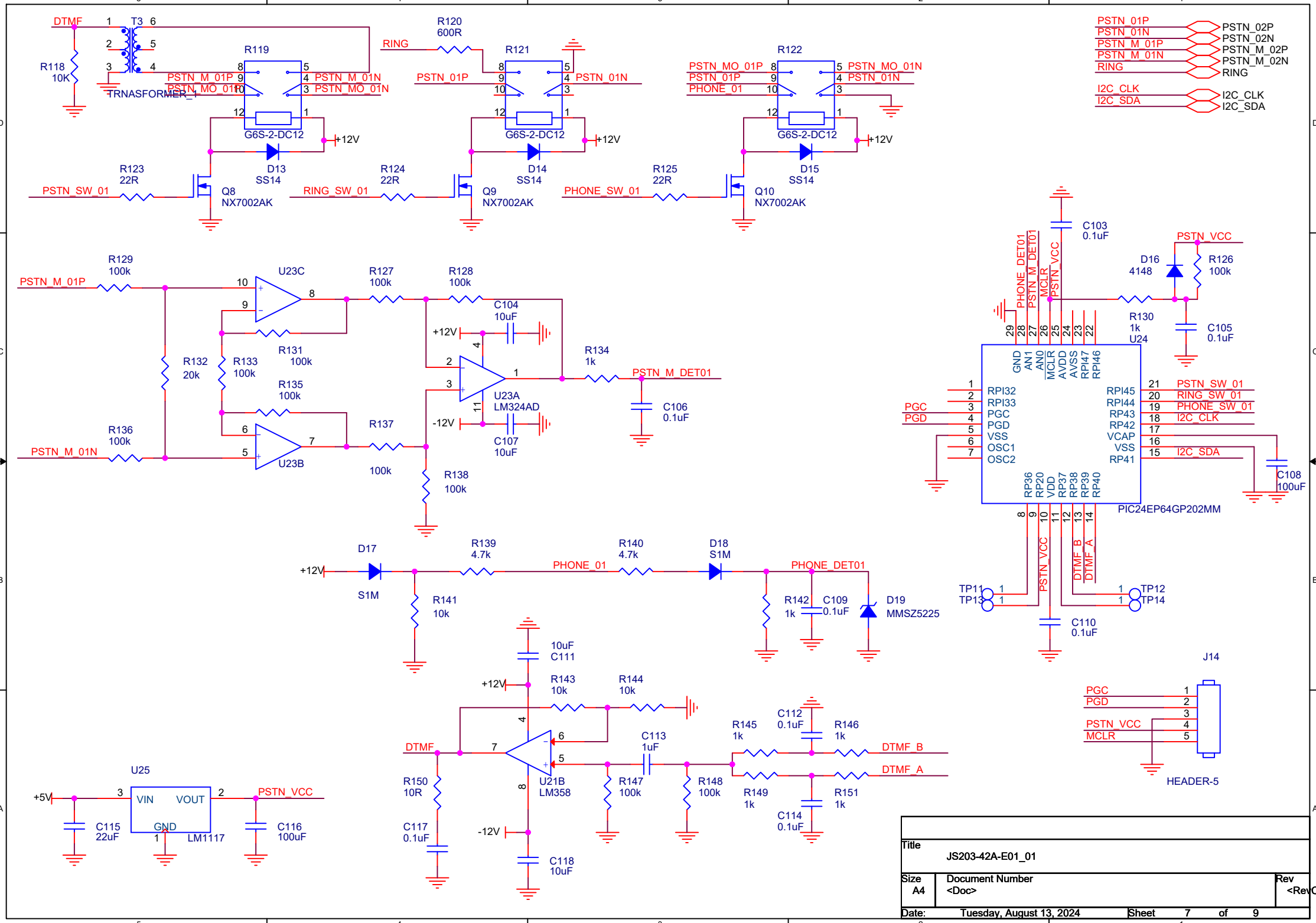
DTMF
T3
R118
10K
TRNASFORMER_1
R119
PSTN_M_01P
PSTN_MO_01P
PSTN_M_01N
PSTN_MO_01N
G6S-2-DC12
+12V
D13
SS14
R123
22R
PSTN_SW_01
Q8
NX7002AK
RING
R120
600R
R121
PSTN_01P
PSTN_01N
D14
SS14
R124
22R
RING_SW_01
Q9
NX7002AK
R122
PSTN_MO_01P
PSTN_01P
PHONE_01
PSTN_MO_01N
PSTN_01N
D15
SS14
R125
22R
PHONE_SW_01
Q10
NX7002AK
PSTN_01P
PSTN_01N
PSTN_M_01P
PSTN_M_01N
RING
I2C_CLK
I2C_SDA
PSTN_02P
PSTN_02N
PSTN_M_02P
PSTN_M_02N
RING
I2C_CLK
I2C_SDA
R129
100k
PSTN_M_01P
U23C
R127
100k
R128
100k
C104
10uF
R131
100k
R132
20k
R133
100k
R135
100k
R134
1k
PSTN_M_DET01
U23A
LM324AD
C106
0.1uF
C107
10uF
R136
100k
PSTN_M_01N
U23B
R137
100k
R138
100k
C103
0.1uF
PSTN_VCC
D16
4148
R126
100k
R130
1k
U24
C105
0.1uF
PHONE_DET01
PSTN_M_DET01
MCLR
PSTN_VCC
GND
AN1
AN0
MCLR
AVDD
AVSS
RPI47
RPI46
RPI32
RPI33
PGC
PGD
VSS
OSC1
OSC2
RPI45
RPI44
RP43
RP42
VCAP
VSS
RP41
PSTN_SW_01
RING_SW_01
PHONE_SW_01
I2C_CLK
I2C_SDA
C108
100uF
PIC24EP64GP202MM
RP36
RP20
VDD
RP37
RP38
RP39
RP40
PSTN_VCC
DTMF_B
DTMF_A
TP11
TP13
TP12
TP14
C110
0.1uF
D17
S1M
+12V
R139
4.7k
PHONE_01
R140
4.7k
D18
S1M
PHONE_DET01
R141
10k
R142
1k
C109
0.1uF
D19
MMSZ5225
10uF
C111
R143
10k
R144
10k
DTMF
U21B
LM358
C113
1uF
R145
1k
C112
0.1uF
R146
1k
DTMF_B
DTMF_A
R150
10R
R147
100k
R148
100k
R149
1k
R151
1k
C114
0.1uF
C117
0.1uF
-12V
C118
10uF
J14
PGC
PGD
PSTN_VCC
MCLR
HEADER-5
U25
+5V
VIN
VOUT
GND
LM1117
PSTN_VCC
C115
22uF
C116
100uF
Title
JS203-42A-E01_01
Size
A4
Document Number
<Doc>
Rev
<RevC
Date:
Tuesday, August 13, 2024
Sheet
7
of
9

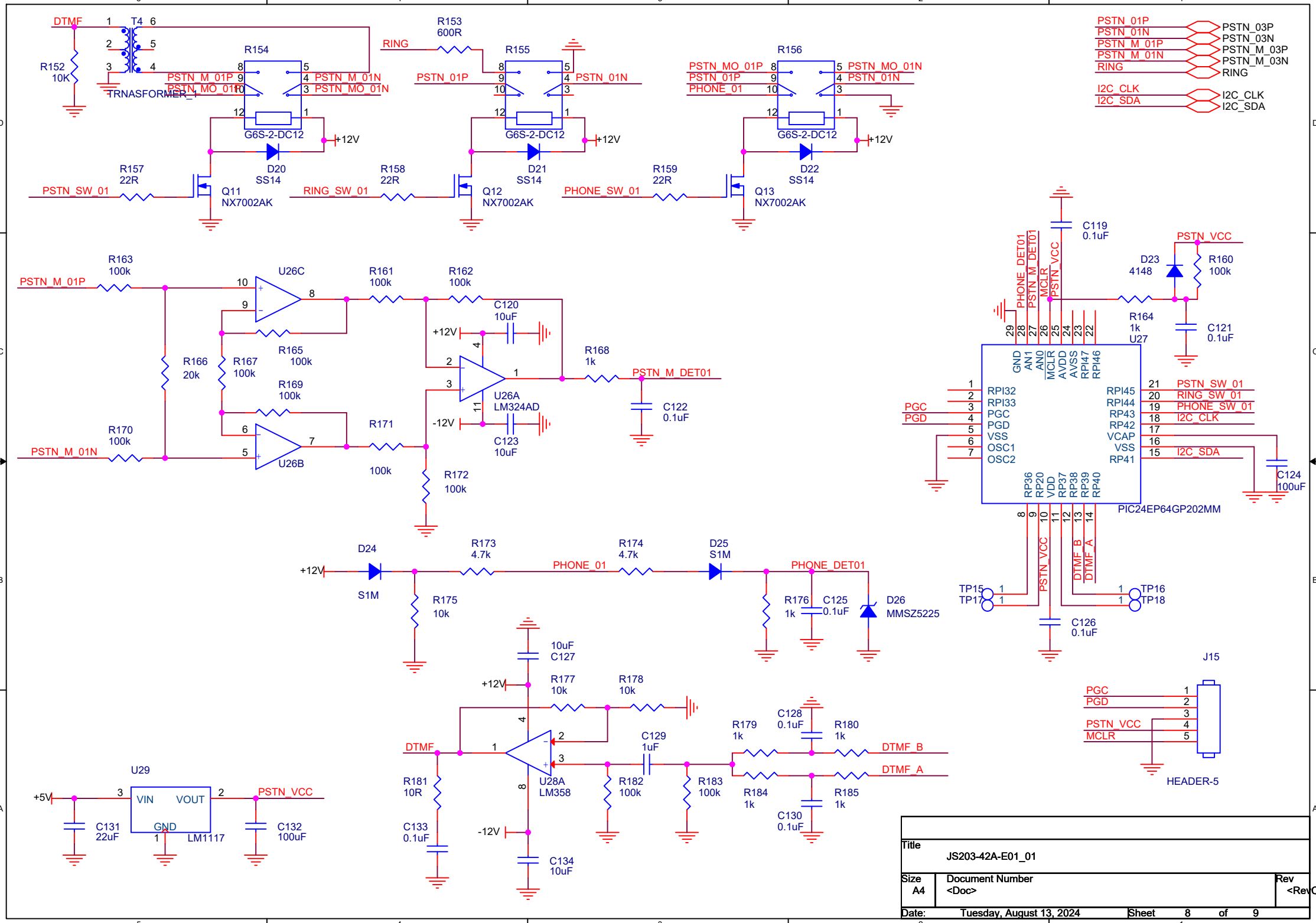
DTMF
T4
R152
10K
TRNASFORMER_1
R154
PSTN_M_01P
PSTN_MO_01P
PSTN_M_01N
PSTN_MO_01N
G6S-2-DC12
+12V
D20
SS14
R157
22R
PSTN_SW_01
Q11
NX7002AK
RING
R153
600R
R155
PSTN_01P
PSTN_01N
D21
SS14
R158
22R
RING_SW_01
Q12
NX7002AK
R156
PSTN_MO_01P
PSTN_01P
PHONE_01
PSTN_MO_01N
PSTN_01N
D22
SS14
R159
22R
PHONE_SW_01
Q13
NX7002AK
PSTN_01P
PSTN_01N
PSTN_M_01P
PSTN_M_01N
RING
I2C_CLK
I2C_SDA
PSTN_03P
PSTN_03N
PSTN_M_03P
PSTN_M_03N
RING
I2C_CLK
I2C_SDA
R163
100k
PSTN_M_01P
U26C
R161
100k
R162
100k
C120
10uF
R165
100k
R166
20k
R167
100k
R169
100k
R168
1k
PSTN_M_DET01
U26A
LM324AD
C122
0.1uF
C123
10uF
R170
100k
PSTN_M_01N
U26B
R171
100k
R172
100k
C119
0.1uF
PSTN_VCC
D23
4148
R160
100k
R164
1k
U27
C121
0.1uF
PHONE_DET01
PSTN_M_DET01
MCLR
PSTN_VCC
GND
AN1
AN0
MCLR
AVDD
AVSS
RPI47
RPI46
RPI32
RPI33
PGC
PGD
VSS
OSC1
OSC2
RPI45
RPI44
RP43
RP42
VCAP
VSS
RP41
PSTN_SW_01
RING_SW_01
PHONE_SW_01
I2C_CLK
I2C_SDA
C124
100uF
RP36
RP20
VDD
RP37
RP38
RP39
RP40
PIC24EP64GP202MM
DTMF_B
DTMF_A
TP15
TP17
TP16
TP18
C126
0.1uF
D24
S1M
R173
4.7k
PHONE_01
R174
4.7k
D25
S1M
PHONE_DET01
R175
10k
R176
1k
C125
0.1uF
D26
MMSZ5225
10uF
C127
R177
10k
R178
10k
DTMF
U28A
LM358
C129
1uF
R179
1k
C128
0.1uF
R180
1k
DTMF_B
DTMF_A
R181
10R
R182
100k
R183
100k
R184
1k
R185
1k
C130
0.1uF
C133
0.1uF
C134
10uF
-12V
J15
PGC
PGD
PSTN_VCC
MCLR
HEADER-5
U29
+5V
VIN
VOUT
GND
LM1117
C131
22uF
C132
100uF
Title
JS203-42A-E01_01
Size
A4
Document Number
<Doc>
Rev
<RevC
Date:
Tuesday, August 13, 2024
Sheet
8
of
9

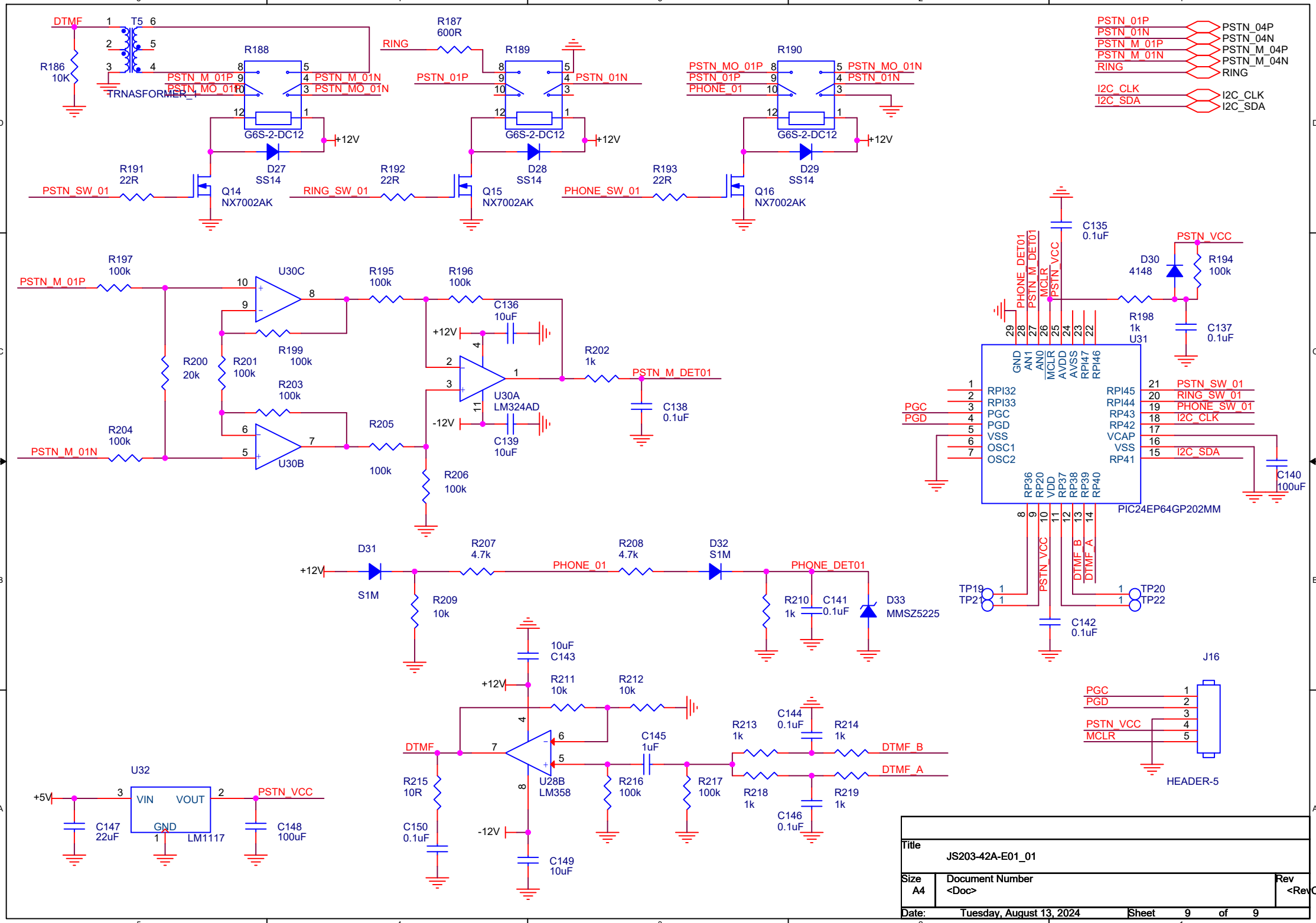
DTMF
T5
R186
10K
TRNASFORMER_1
R188
PSTN_M_01P
PSTN_MO_01P
PSTN_M_01N
PSTN_MO_01N
G6S-2-DC12
+12V
D27
SS14
R191
22R
PSTN_SW_01
Q14
NX7002AK
RING
R187
600R
R189
PSTN_01P
PSTN_01N
D28
SS14
R192
22R
RING_SW_01
Q15
NX7002AK
R190
PSTN_MO_01P
PSTN_01P
PHONE_01
PSTN_MO_01N
PSTN_01N
D29
SS14
R193
22R
PHONE_SW_01
Q16
NX7002AK
PSTN_01P
PSTN_01N
PSTN_M_01P
PSTN_M_01N
RING
PSTN_04P
PSTN_04N
PSTN_M_04P
PSTN_M_04N
RING
I2C_CLK
I2C_SDA
I2C_CLK
I2C_SDA
R197
100k
PSTN_M_01P
U30C
R195
100k
R196
100k
C136
10uF
R199
100k
R200
20k
R201
100k
R203
100k
R202
1k
PSTN_M_DET01
C138
0.1uF
U30A
LM324AD
C139
10uF
-12V
R204
100k
PSTN_M_01N
U30B
R205
100k
R206
100k
C135
0.1uF
PSTN_VCC
D30
4148
R194
100k
R198
1k
C137
0.1uF
U31
PHONE_DET01
PSTN_M_DET01
MCLR
PSTN_VCC
GND
AN1
AN0
MCLR
AVDD
AVSS
RPI47
RPI46
RPI32
RPI33
PGC
PGD
VSS
OSC1
OSC2
RPI45
RPI44
RP43
RP42
VCAP
VSS
RP41
PSTN_SW_01
RING_SW_01
PHONE_SW_01
I2C_CLK
I2C_SDA
C140
100uF
PIC24EP64GP202MM
RP36
RP20
VDD
RP37
RP38
RP39
RP40
DTMF_B
DTMF_A
TP19
TP21
TP20
TP22
C142
0.1uF
D31
S1M
R207
4.7k
PHONE_01
R208
4.7k
D32
S1M
PHONE_DET01
R209
10k
R210
1k
C141
0.1uF
D33
MMSZ5225
10uF
C143
R211
10k
R212
10k
DTMF
C145
1uF
R213
1k
C144
0.1uF
R214
1k
DTMF_B
DTMF_A
R215
10R
U28B
LM358
R216
100k
R217
100k
R218
1k
R219
1k
C146
0.1uF
C150
0.1uF
C149
10uF
J16
PGC
PGD
PSTN_VCC
MCLR
HEADER-5
U32
+5V
VIN
VOUT
GND
LM1117
PSTN_VCC
C147
22uF
C148
100uF
Title
JS203-42A-E01_01
Size
A4
Document Number
<Doc>
Rev
<RevC
Date:
Tuesday, August 13, 2024
Sheet
9
of
9

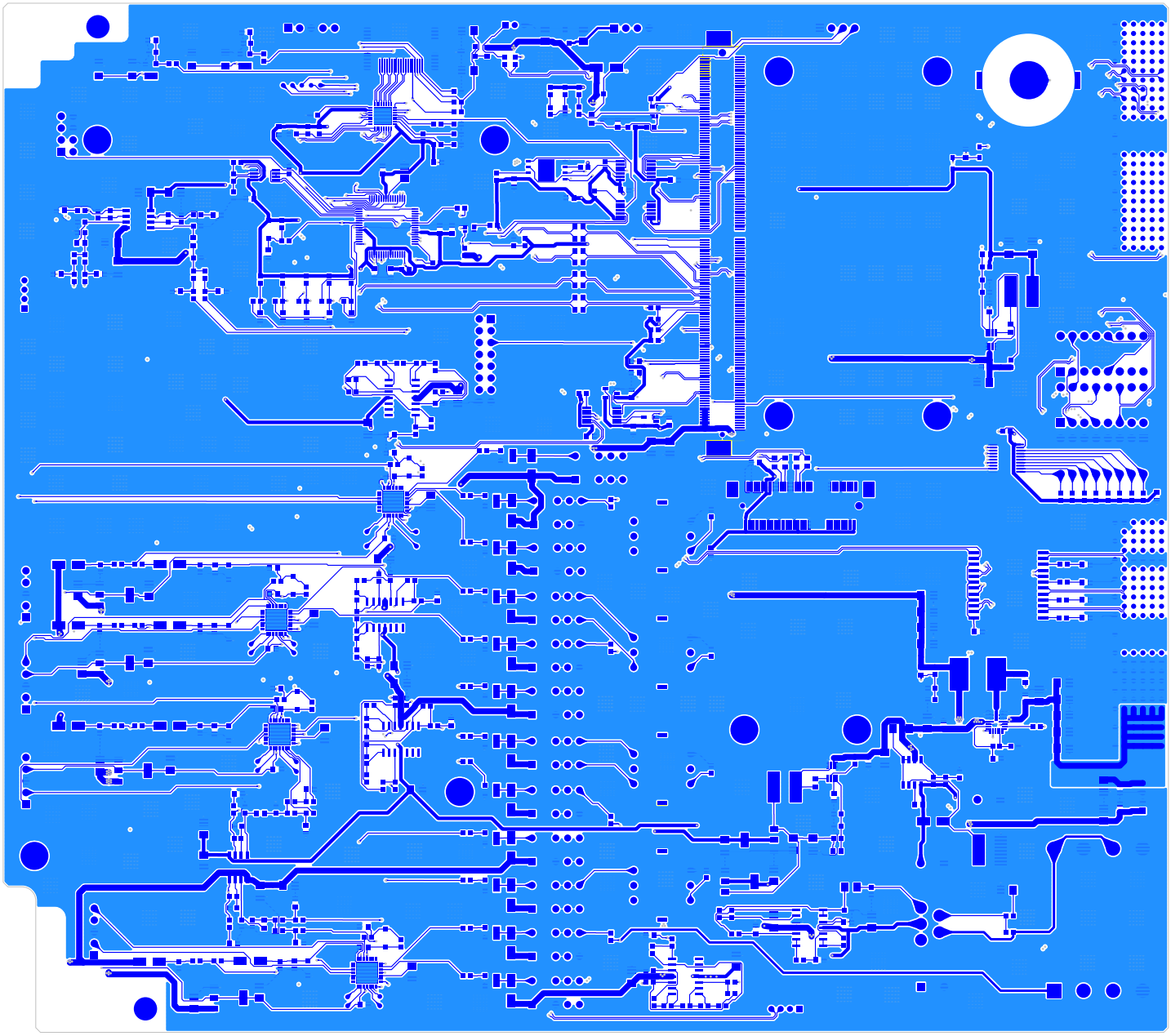

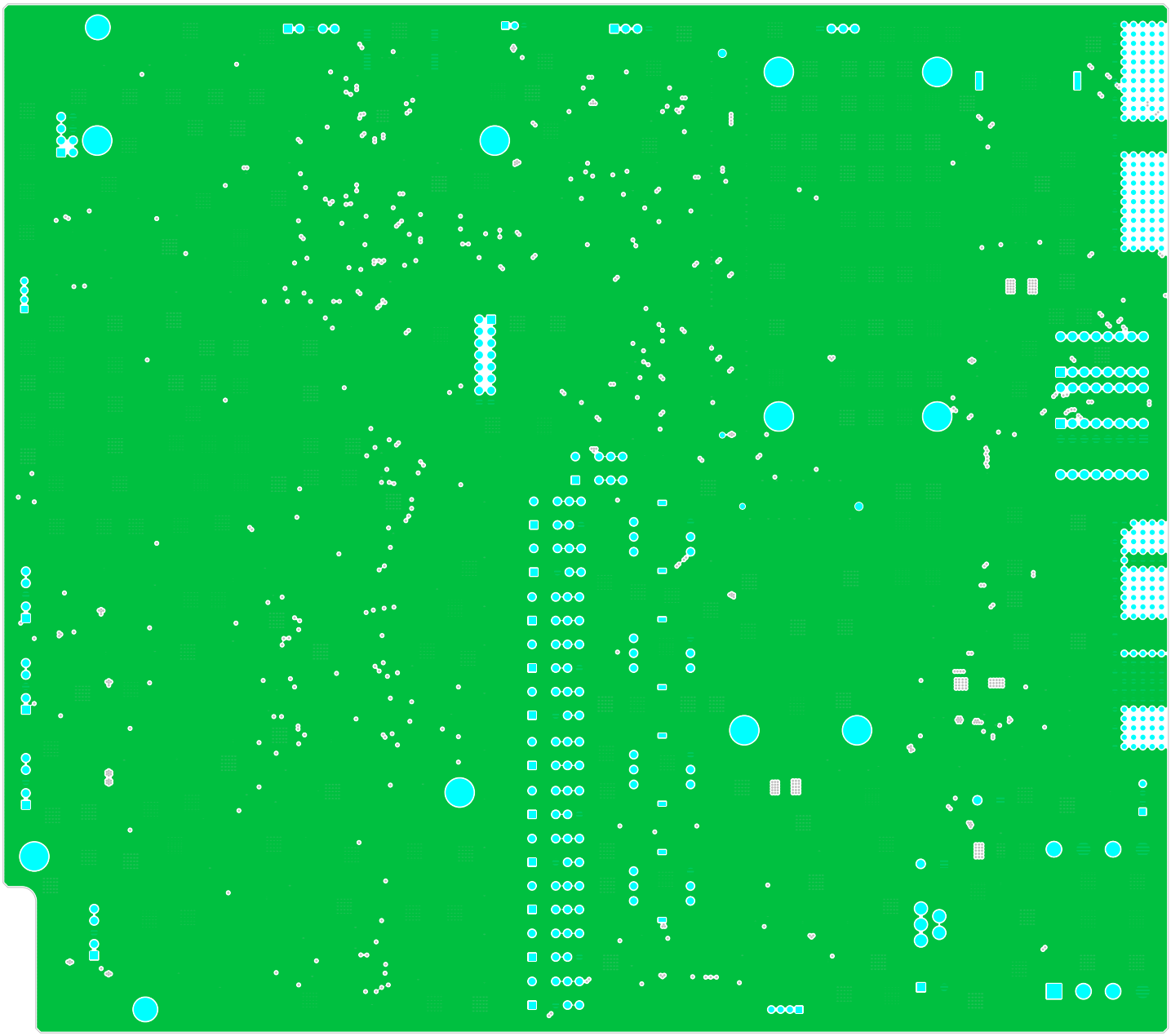

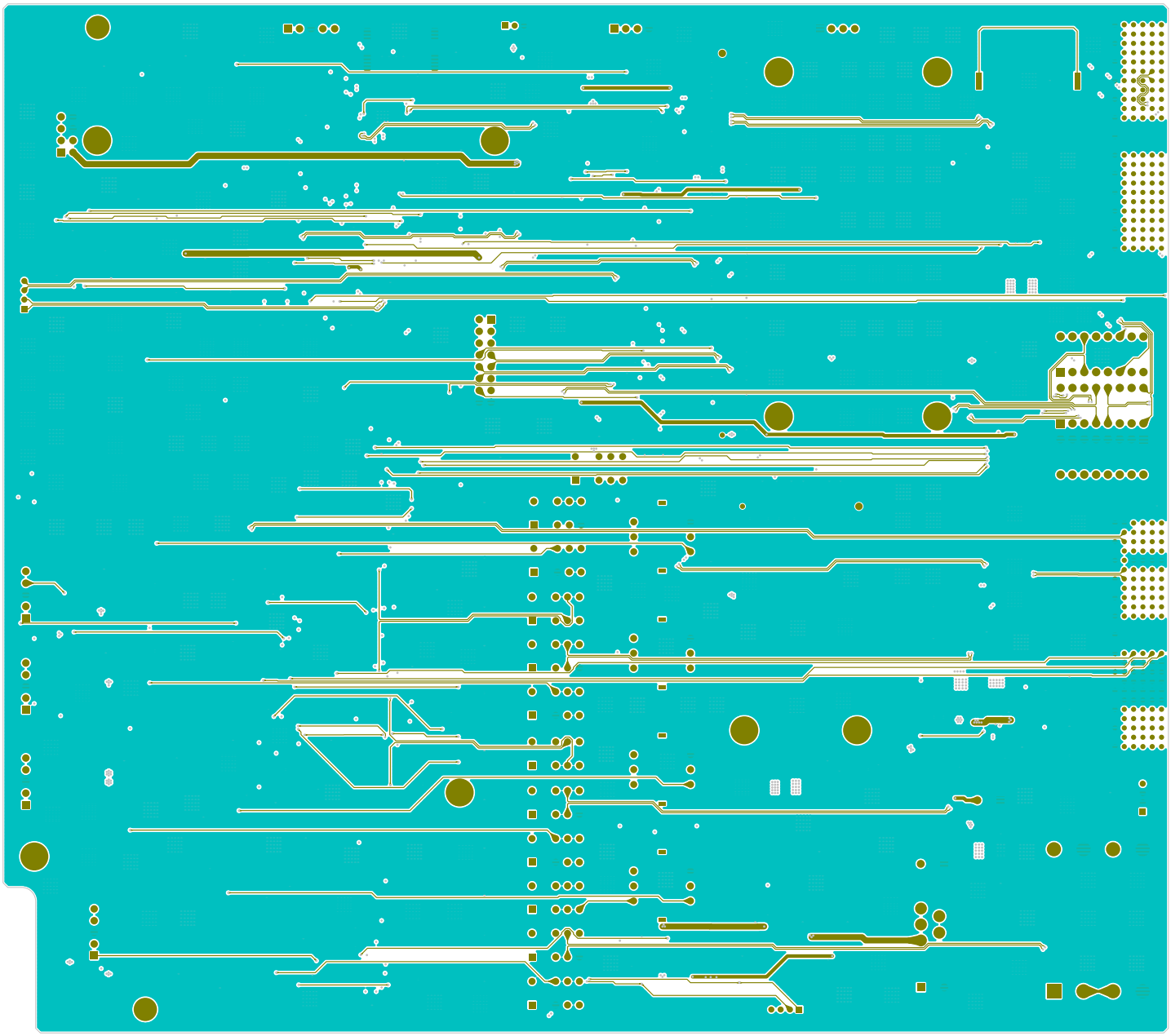

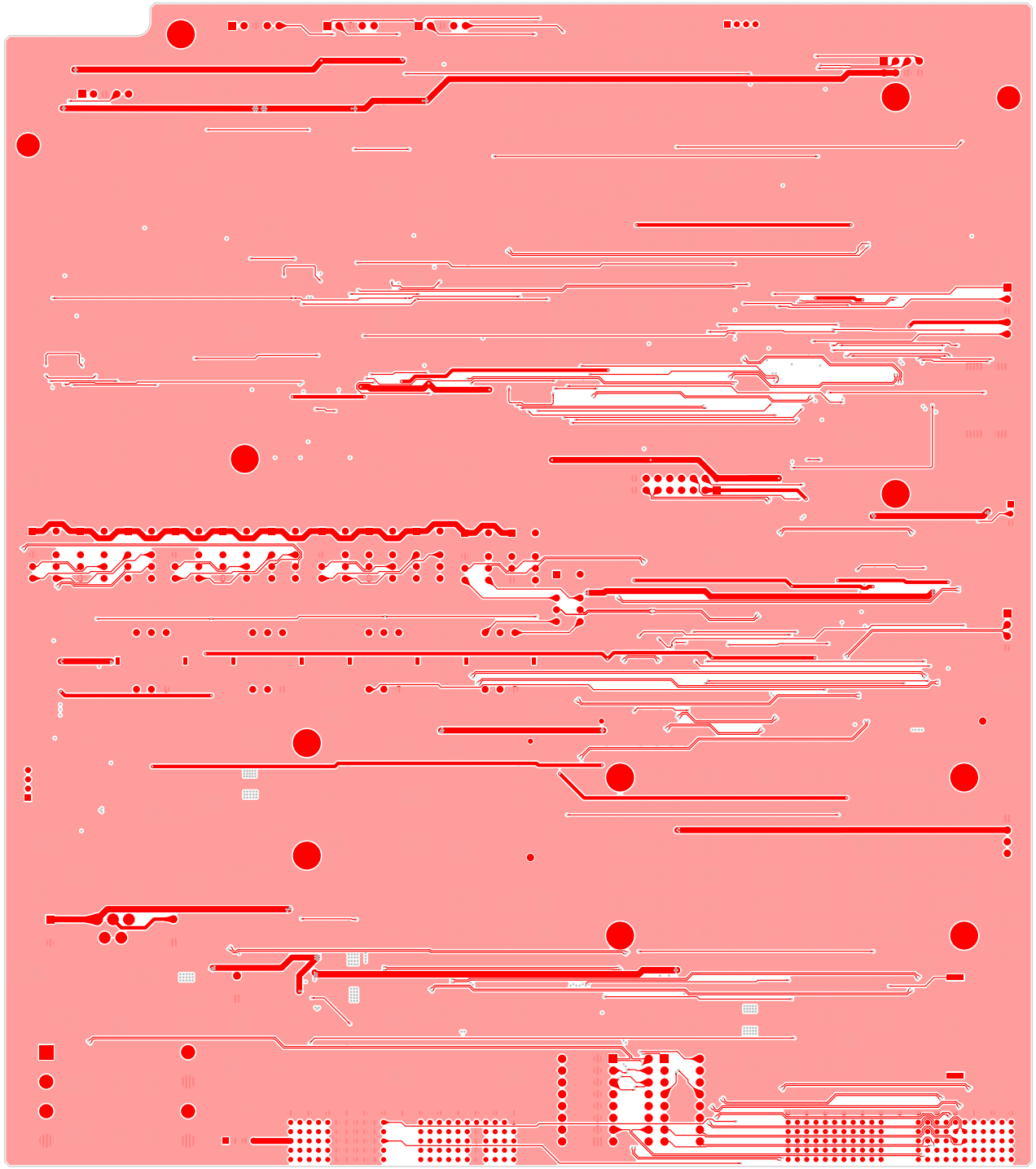

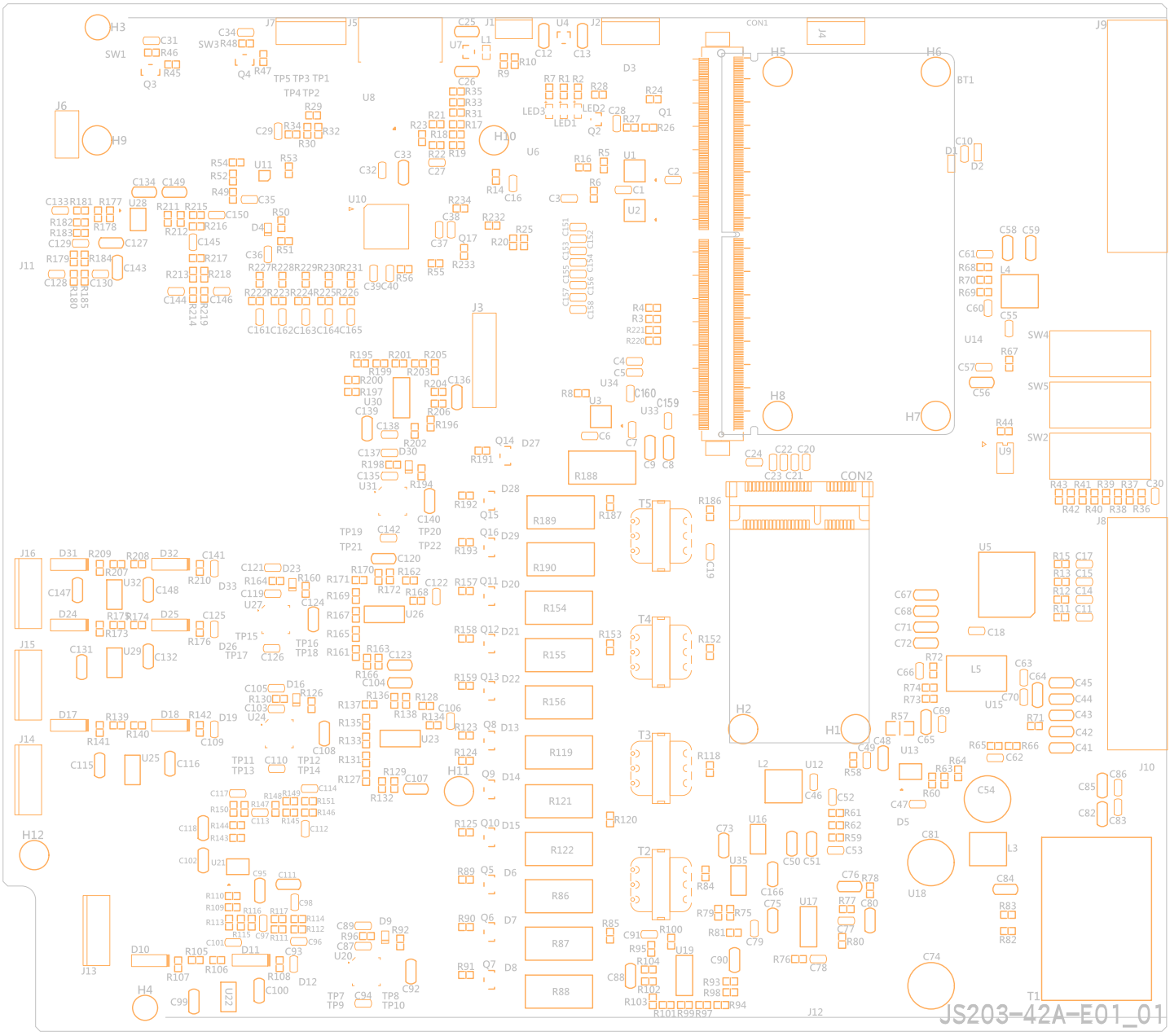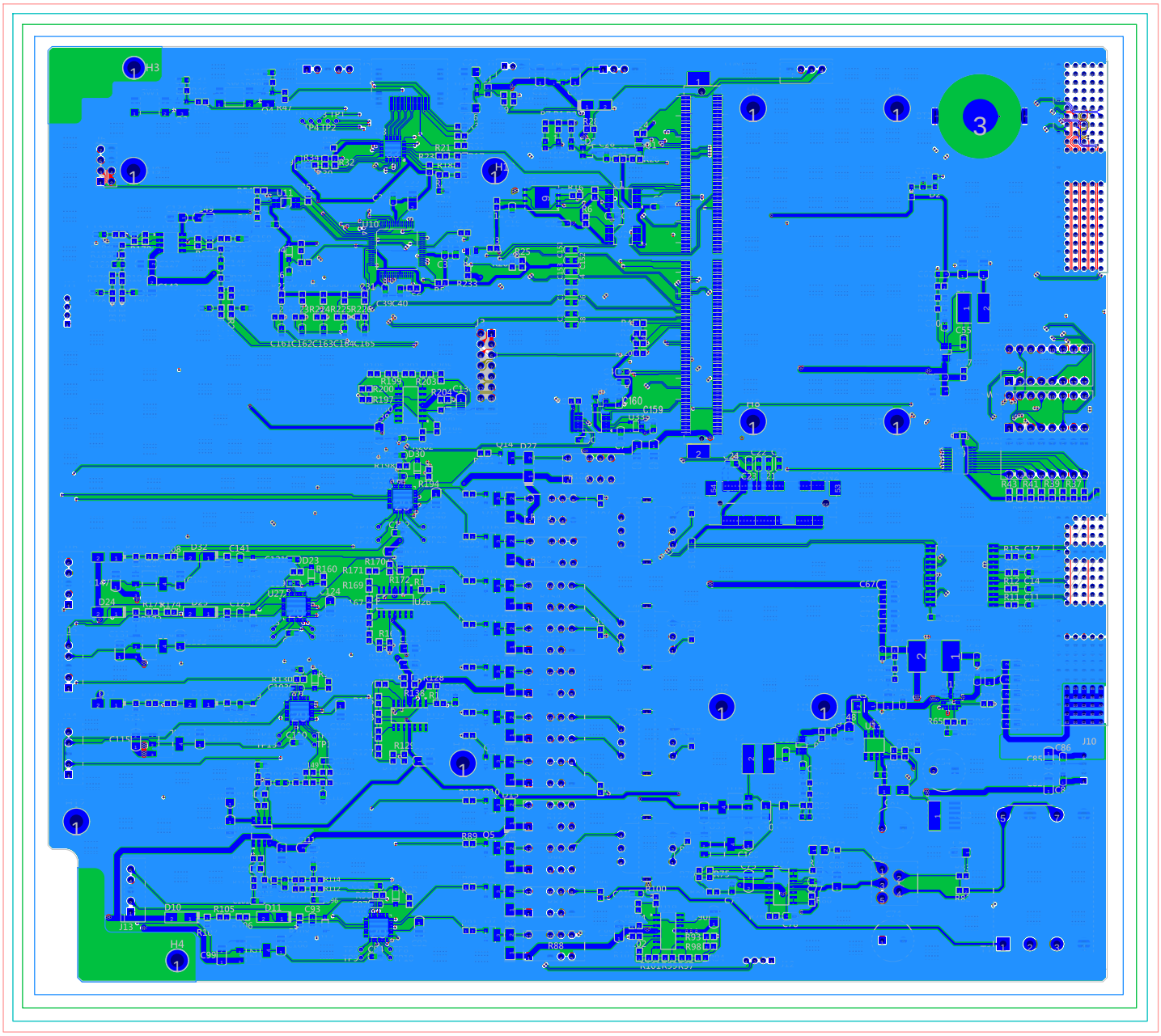
JS203-42A-E01_01