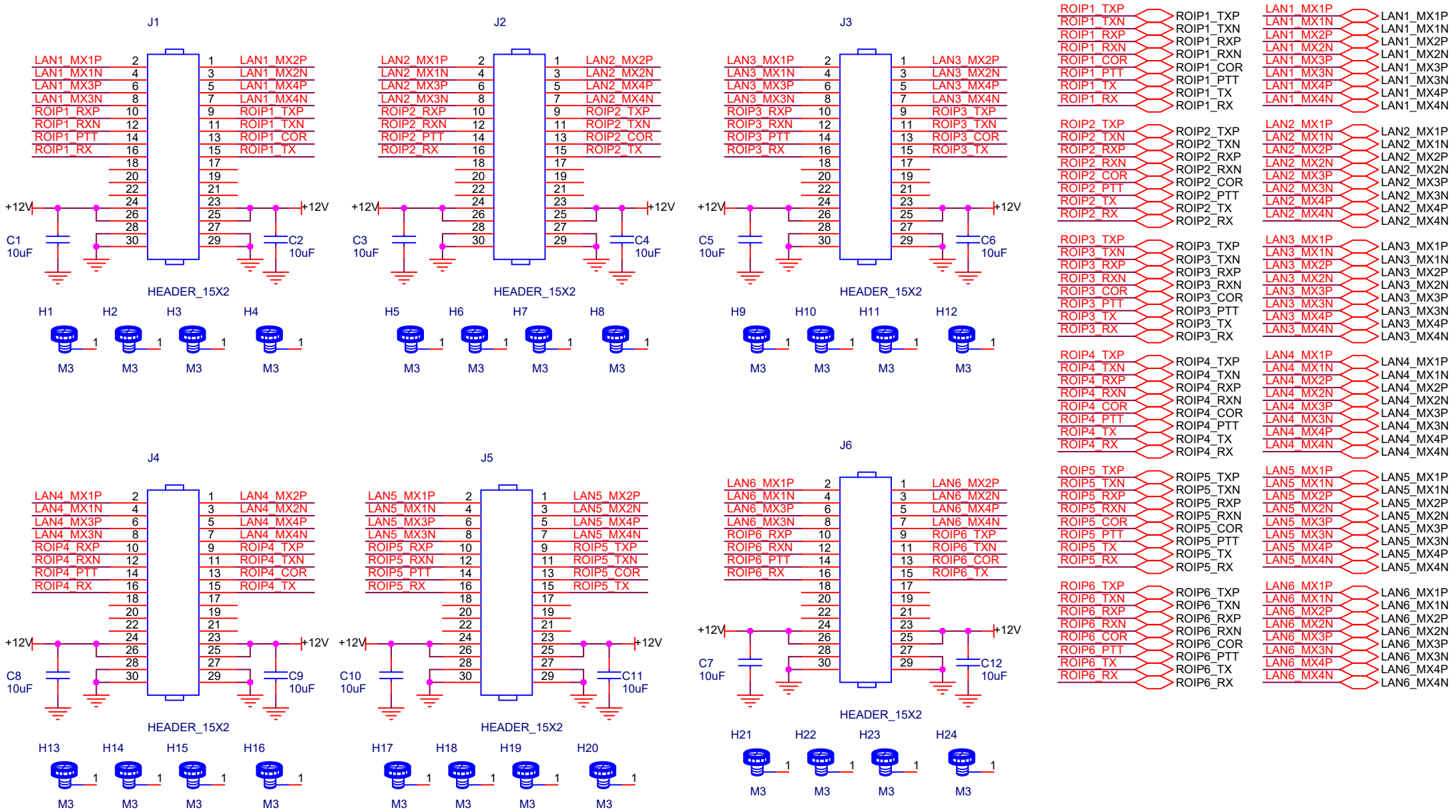

Title <Title>		
Size A4	Document Number <Doc>	Rev <RevCo
Date: Thursday, January 04, 2024	Sheet 1 of 6	

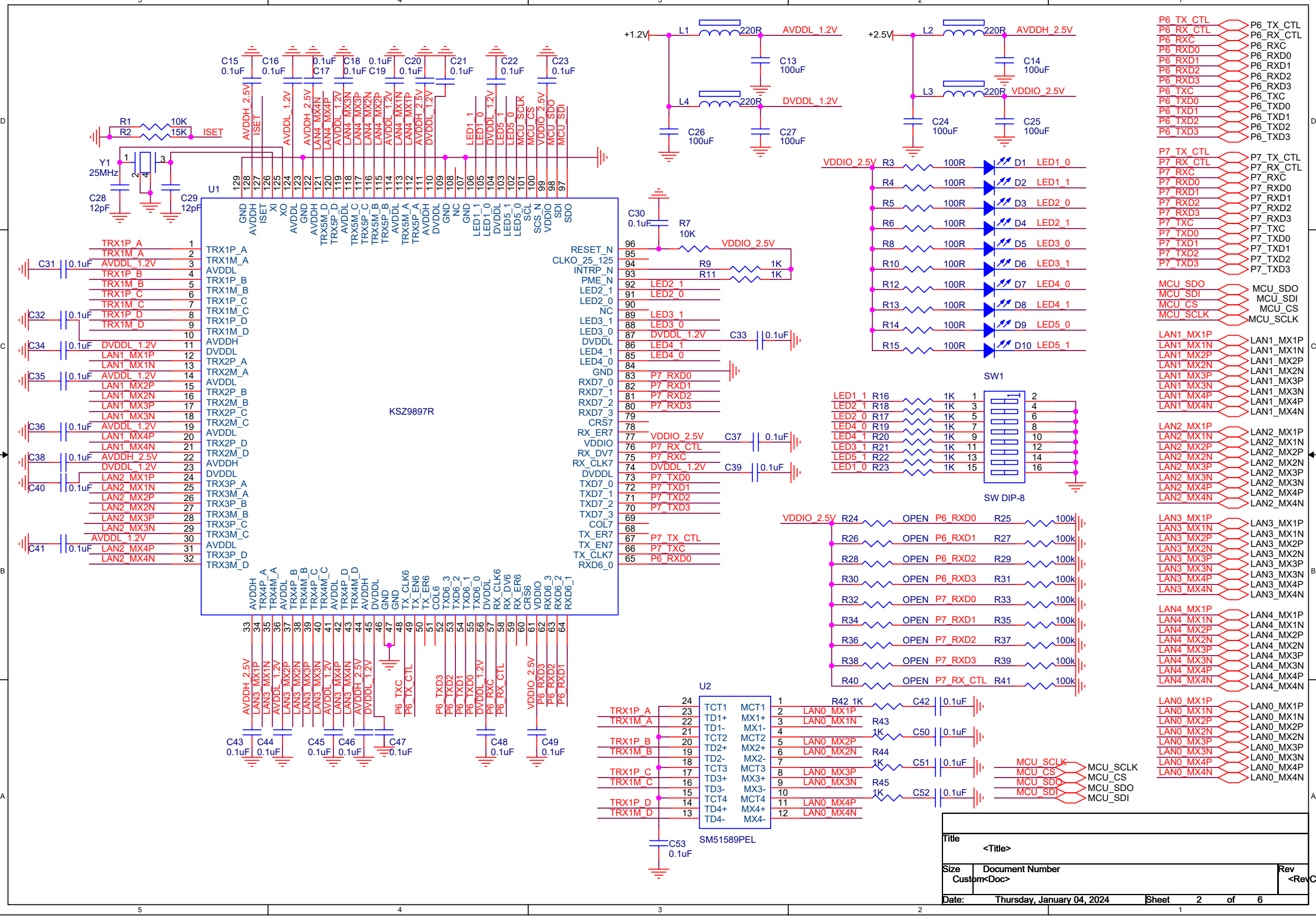
U1
KSZ9897R
U2
SM51589PEL
SW1
SW DIP-8
Y1
25MHz
R1
10K
R2
15K
ISET
+1.2V
L1
220R
AVDDL_1.2V
C13
100uF
L4
220R
DVDDL_1.2V
C26
100uF
C27
100uF
+2.5V
L2
220R
AVDDH_2.5V
C14
100uF
L3
220R
VDDIO_2.5V
C24
100uF
C25
100uF
C15
0.1uF
C16
0.1uF
C17
0.1uF
C18
0.1uF
C19
0.1uF
C20
0.1uF
C21
0.1uF
C22
0.1uF
C23
0.1uF
C28
12pF
C29
12pF
C30
0.1uF
R7
10K
R9
1K
R11
1K
C33
0.1uF
C37
0.1uF
C39
0.1uF
C31
0.1uF
C32
0.1uF
C34
0.1uF
C35
0.1uF
C36
0.1uF
C38
0.1uF
C40
0.1uF
C41
0.1uF
C43
0.1uF
C44
0.1uF
C45
0.1uF
C46
0.1uF
C47
0.1uF
C48
0.1uF
C49
0.1uF
C53
0.1uF
R42 1K
R43
1K
R44
1K
R45
1K
C42
0.1uF
C50
0.1uF
C51
0.1uF
C52
0.1uF
R3
R4
R5
R6
R8
R10
R12
R13
R14
R15
100R
D1
D2
D3
D4
D5
D6
D7
D8
D9
D10
LED1_0
LED1_1
LED2_0
LED2_1
LED3_0
LED3_1
LED4_0
LED4_1
LED5_0
LED5_1
R16
R18
R17
R19
R20
R21
R22
R23
1K
R24
R25
R26
R27
R28
R29
R30
R31
R32
R33
R34
R35
R36
R37
R38
R39
R40
R41
OPEN
100k
P6_TX_CTL
P6_RX_CTL
P6_RXC
P6_RXD0
P6_RXD1
P6_RXD2
P6_RXD3
P6_TXC
P6_TXD0
P6_TXD1
P6_TXD2
P6_TXD3
P7_TX_CTL
P7_RX_CTL
P7_RXC
P7_RXD0
P7_RXD1
P7_RXD2
P7_RXD3
P7_TXC
P7_TXD0
P7_TXD1
P7_TXD2
P7_TXD3
MCU_SDO
MCU_SDI
MCU_CS
MCU_SCLK
LAN1_MX1P
LAN1_MX1N
LAN1_MX2P
LAN1_MX2N
LAN1_MX3P
LAN1_MX3N
LAN1_MX4P
LAN1_MX4N
LAN2_MX1P
LAN2_MX1N
LAN2_MX2P
LAN2_MX2N
LAN2_MX3P
LAN2_MX3N
LAN2_MX4P
LAN2_MX4N
LAN3_MX1P
LAN3_MX1N
LAN3_MX2P
LAN3_MX2N
LAN3_MX3P
LAN3_MX3N
LAN3_MX4P
LAN3_MX4N
LAN4_MX1P
LAN4_MX1N
LAN4_MX2P
LAN4_MX2N
LAN4_MX3P
LAN4_MX3N
LAN4_MX4P
LAN4_MX4N
LAN0_MX1P
LAN0_MX1N
LAN0_MX2P
LAN0_MX2N
LAN0_MX3P
LAN0_MX3N
LAN0_MX4P
LAN0_MX4N
Title
<Title>
Size
Custom
Document Number
<Doc>
Rev
<RevCo
Date:
Thursday, January 04, 2024
Sheet
2
of
6

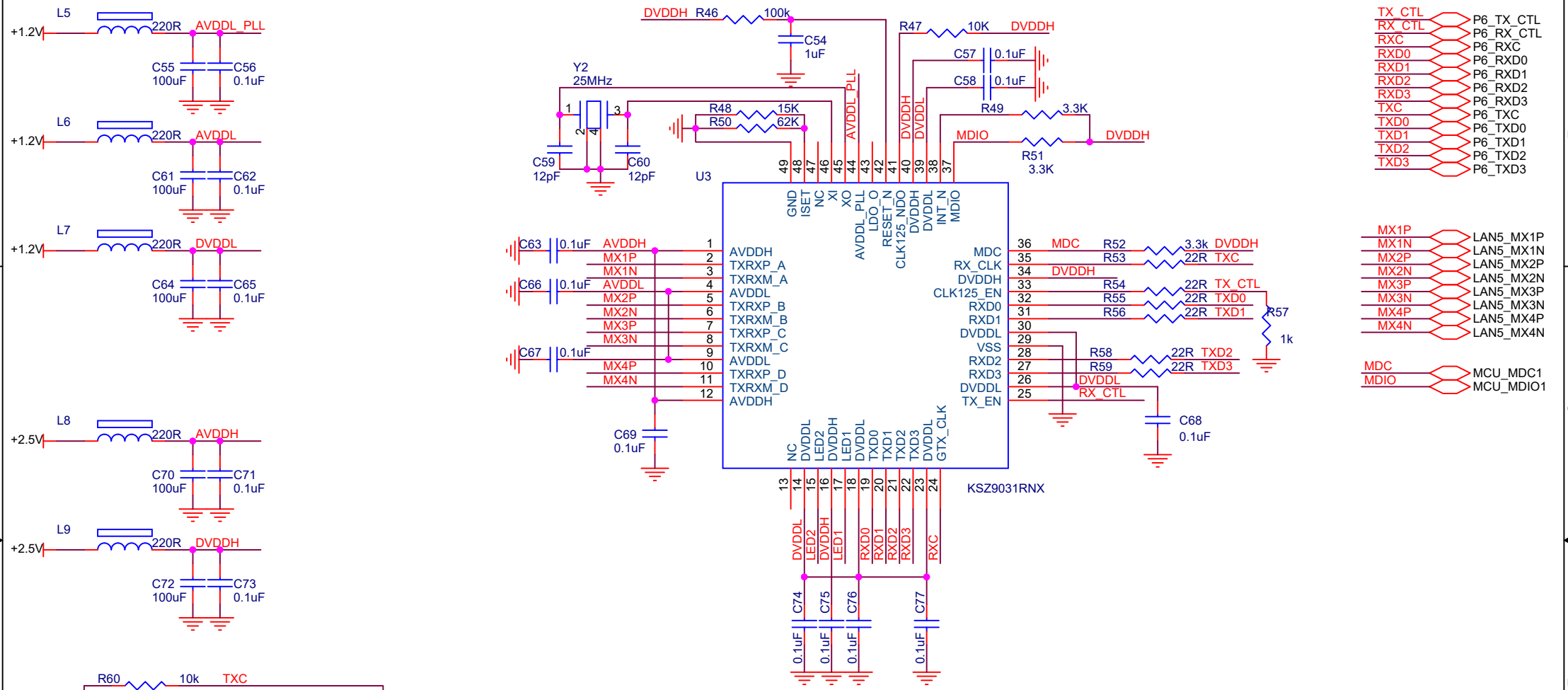

Title	<Title>	
Size A4	Document Number <Doc>	Rev <RevC
Date: Thursday, January 04, 2024	Sheet 3 of 6	

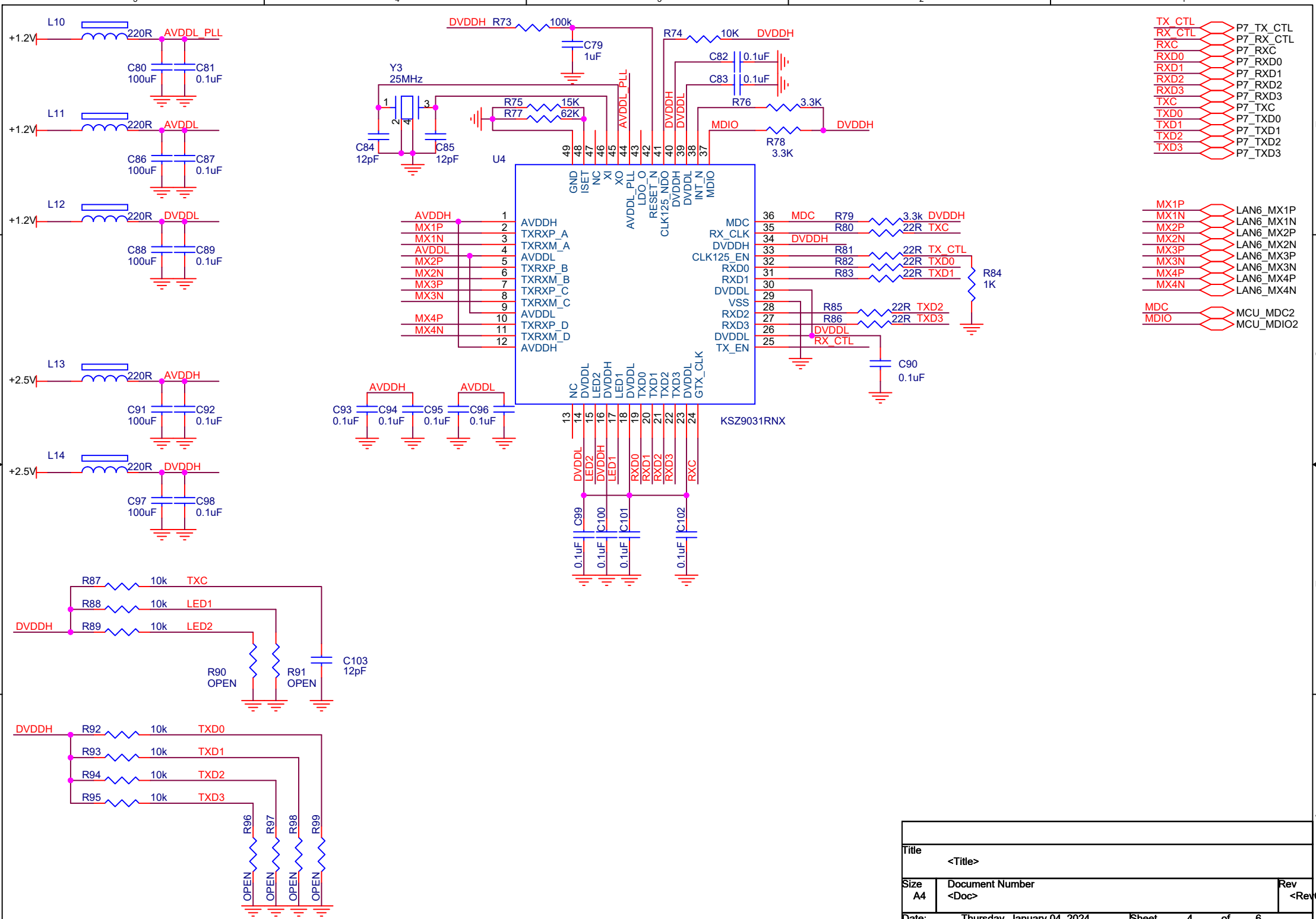

Title	<Title>	
Size A4	Document Number <Doc>	Rev <RevCo
Date: Thursday, January 04, 2024	Sheet 4 of 6	

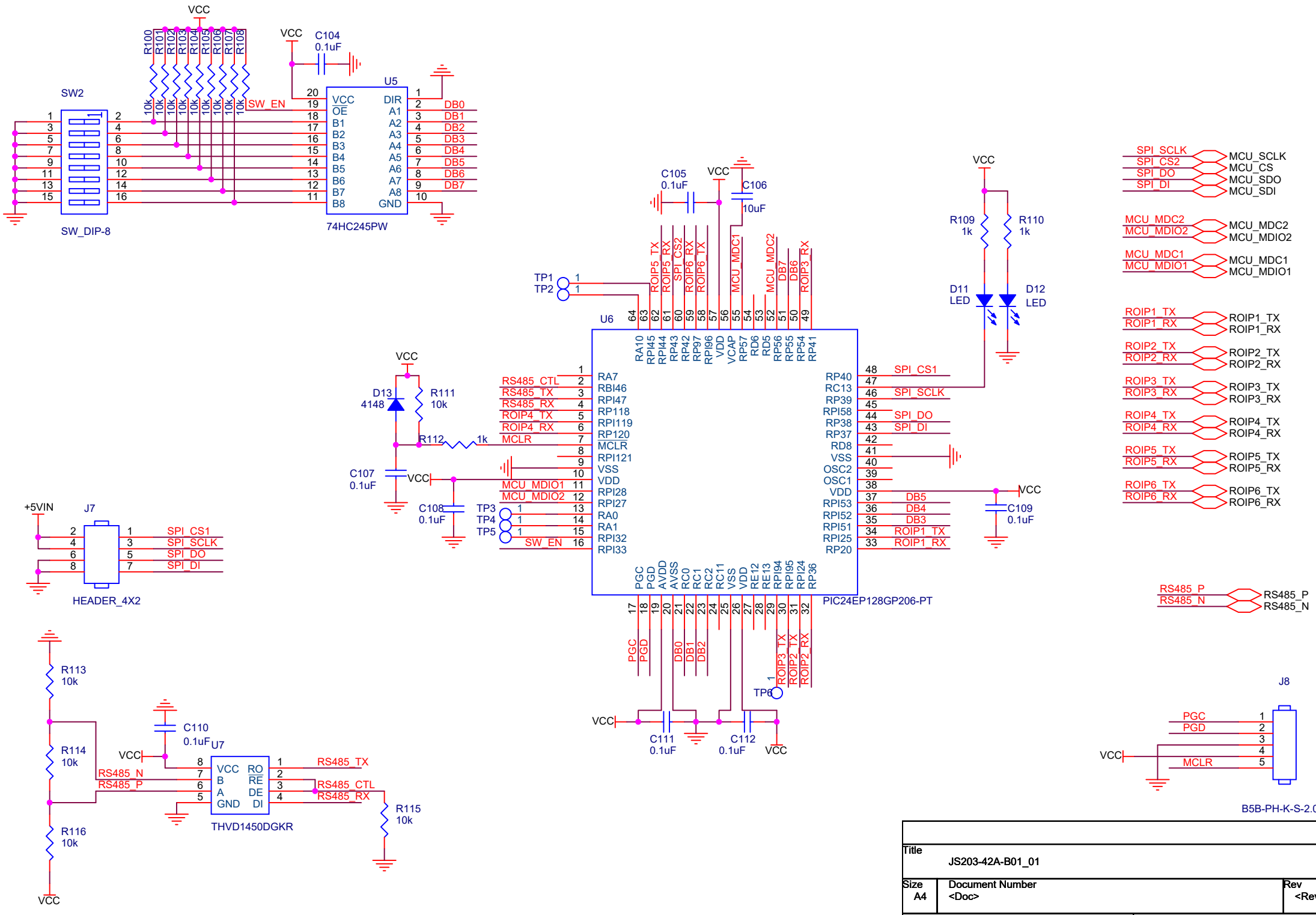
SW2
SW_DIP-8
U5
74HC245PW
VCC
C104
0.1uF
SW_EN
DB0
DB1
DB2
DB3
DB4
DB5
DB6
DB7
U6
PIC24EP128GP206-PT
C105
0.1uF
C106
10uF
R109
1k
R110
1k
D11
LED
D12
LED
D13
4148
R111
10k
R112
1k
C107
0.1uF
C108
0.1uF
C109
0.1uF
C111
0.1uF
C112
0.1uF
TP1
TP2
TP3
TP4
TP5
TP6
RS485_CTL
RS485_TX
RS485_RX
ROIP4_TX
ROIP4_RX
MCLR
MCU_MDIO1
MCU_MDIO2
ROIP5_TX
ROIP5_RX
SPI_CS2
ROIP6_RX
ROIP6_TX
MCU_MDC1
MCU_MDC2
ROIP3_RX
ROIP3_TX
ROIP2_TX
ROIP2_RX
ROIP1_TX
ROIP1_RX
SPI_CS1
SPI_SCLK
SPI_DO
SPI_DI
MCU_SCLK
MCU_CS
MCU_SDO
MCU_SDI
+5VIN
J7
HEADER_4X2
R113
10k
R114
10k
R116
10k
C110
0.1uF
U7
THVD1450DGKR
RS485_N
RS485_P
R115
10k
J8
B5B-PH-K-S-2.0
PGC
PGD
MCLR
Title
JS203-42A-B01_01
Size
A4
Document Number
<Doc>
Rev
<RevC
Date:
Thursday, January 04, 2024
Sheet
5
of
6

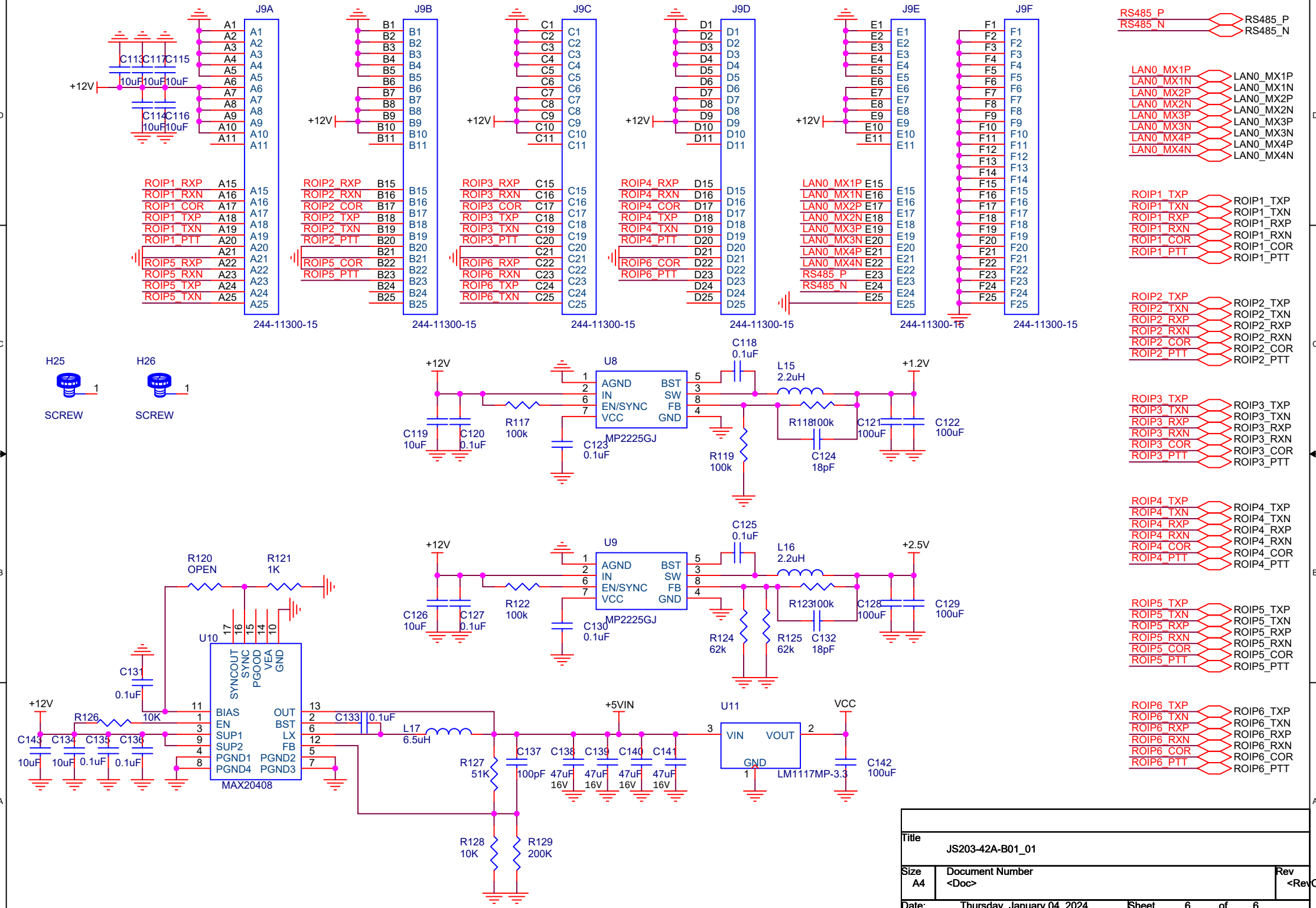

Title	JS203-42A-B01_01	
Size A4	Document Number <Doc>	Rev <RevCo
Date: Thursday, January 04, 2024	Sheet 6 of 6	