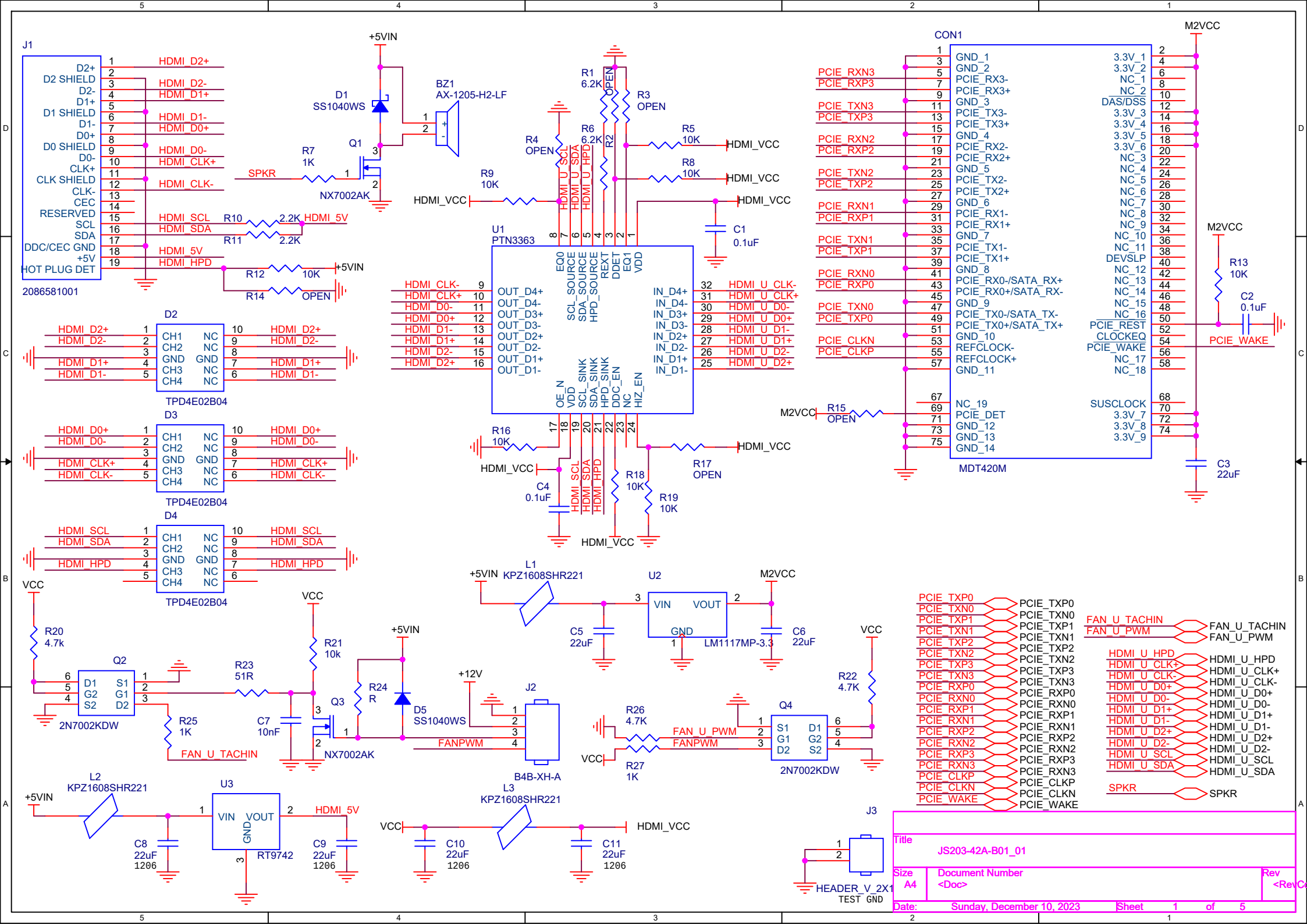
J1
2086581001
D2+
D2 SHIELD
D2-
D1+
D1 SHIELD
D1-
D0+
D0 SHIELD
D0-
CLK+
CLK SHIELD
CLK-
CEC
RESERVED
SCL
SDA
DDC/CEC GND
+5V
HOT PLUG DET
HDMI_D2+
HDMI_D2-
HDMI_D1+
HDMI_D1-
HDMI_D0+
HDMI_D0-
HDMI_CLK+
HDMI_CLK-
HDMI_SCL
HDMI_SDA
HDMI_5V
HDMI_HPD
+5VIN
D1
SS1040WS
BZ1
AX-1205-H2-LF
Q1
NX7002AK
R7
1K
SPKR
R9
10K
R10
2.2K
R11
2.2K
R12
10K
R14
OPEN
R1
6.2K
R2
OPEN
R3
OPEN
R4
OPEN
R6
6.2K
R5
10K
R8
10K
HDMI_VCC
C1
0.1uF
U1
PTN3363
EQ0
SCL_SOURCE
SDA_SOURCE
HPD_SOURCE
REXT
DDET
EQ1
VDD
OUT_D4+
OUT_D4-
OUT_D3+
OUT_D3-
OUT_D2+
OUT_D2-
OUT_D1+
OUT_D1-
IN_D4+
IN_D4-
IN_D3+
IN_D3-
IN_D2+
IN_D2-
IN_D1+
IN_D1-
HDMI_U_CLK-
HDMI_U_CLK+
HDMI_U_D0-
HDMI_U_D0+
HDMI_U_D1-
HDMI_U_D1+
HDMI_U_D2-
HDMI_U_D2+
OE_N
VDD
SCL_SINK
SDA_SINK
HPD_SINK
DDC_EN
NC
HIZ_EN
R16
10K
R17
OPEN
R18
10K
R19
10K
C4
0.1uF
D2
TPD4E02B04
D3
TPD4E02B04
D4
TPD4E02B04
CH1
CH2
GND
CH3
CH4
NC
CON1
MDT420M
M2VCC
GND_1
GND_2
PCIE_RX3-
PCIE_RX3+
GND_3
PCIE_TX3-
PCIE_TX3+
GND_4
PCIE_RX2-
PCIE_RX2+
GND_5
PCIE_TX2-
PCIE_TX2+
GND_6
PCIE_RX1-
PCIE_RX1+
GND_7
PCIE_TX1-
PCIE_TX1+
GND_8
PCIE_RX0-/SATA_RX+
PCIE_RX0+/SATA_RX-
GND_9
PCIE_TX0-/SATA_TX-
PCIE_TX0+/SATA_TX+
GND_10
REFCLOCK-
REFCLOCK+
GND_11
NC_19
PCIE_DET
GND_12
GND_13
GND_14
3.3V_1
3.3V_2
NC_1
NC_2
DAS/DSS
3.3V_3
3.3V_4
3.3V_5
3.3V_6
NC_3
NC_4
NC_5
NC_6
NC_7
NC_8
NC_9
NC_10
NC_11
DEVSLP
NC_12
NC_13
NC_14
NC_15
NC_16
PCIE_REST
CLOCKEQ
PCIE_WAKE
NC_17
NC_18
SUSCLOCK
3.3V_7
3.3V_8
3.3V_9
PCIE_RXN3
PCIE_RXP3
PCIE_TXN3
PCIE_TXP3
PCIE_RXN2
PCIE_RXP2
PCIE_TXN2
PCIE_TXP2
PCIE_RXN1
PCIE_RXP1
PCIE_TXN1
PCIE_TXP1
PCIE_RXN0
PCIE_RXP0
PCIE_TXN0
PCIE_TXP0
PCIE_CLKN
PCIE_CLKP
R15
OPEN
R13
10K
C2
0.1uF
C3
22uF
VCC
R20
4.7k
Q2
2N7002KDW
R23
51R
R25
1K
FAN_U_TACHIN
R21
10k
C7
10nF
Q3
NX7002AK
R24
R
D5
SS1040WS
FANPWM
L1
KPZ1608SHR221
U2
VIN
VOUT
GND
LM1117MP-3.3
C5
22uF
C6
22uF
+12V
J2
B4B-XH-A
R26
4.7K
R27
1K
FAN_U_PWM
Q4
2N7002KDW
R22
4.7K
L2
KPZ1608SHR221
U3
RT9742
C8
22uF
1206
C9
22uF
1206
L3
KPZ1608SHR221
C10
22uF
1206
C11
22uF
1206
J3
HEADER_V_2X1
TEST GND
FAN_U_TACHIN
FAN_U_PWM
HDMI_U_HPD
HDMI_U_CLK+
HDMI_U_CLK-
HDMI_U_D0+
HDMI_U_D0-
HDMI_U_D1+
HDMI_U_D1-
HDMI_U_D2+
HDMI_U_D2-
HDMI_U_SCL
HDMI_U_SDA
SPKR
Title
JS203-42A-B01_01
Size
A4
Document Number
<Doc>
Rev
<RevCo
Date:
Sunday, December 10, 2023
Sheet
1
of
5

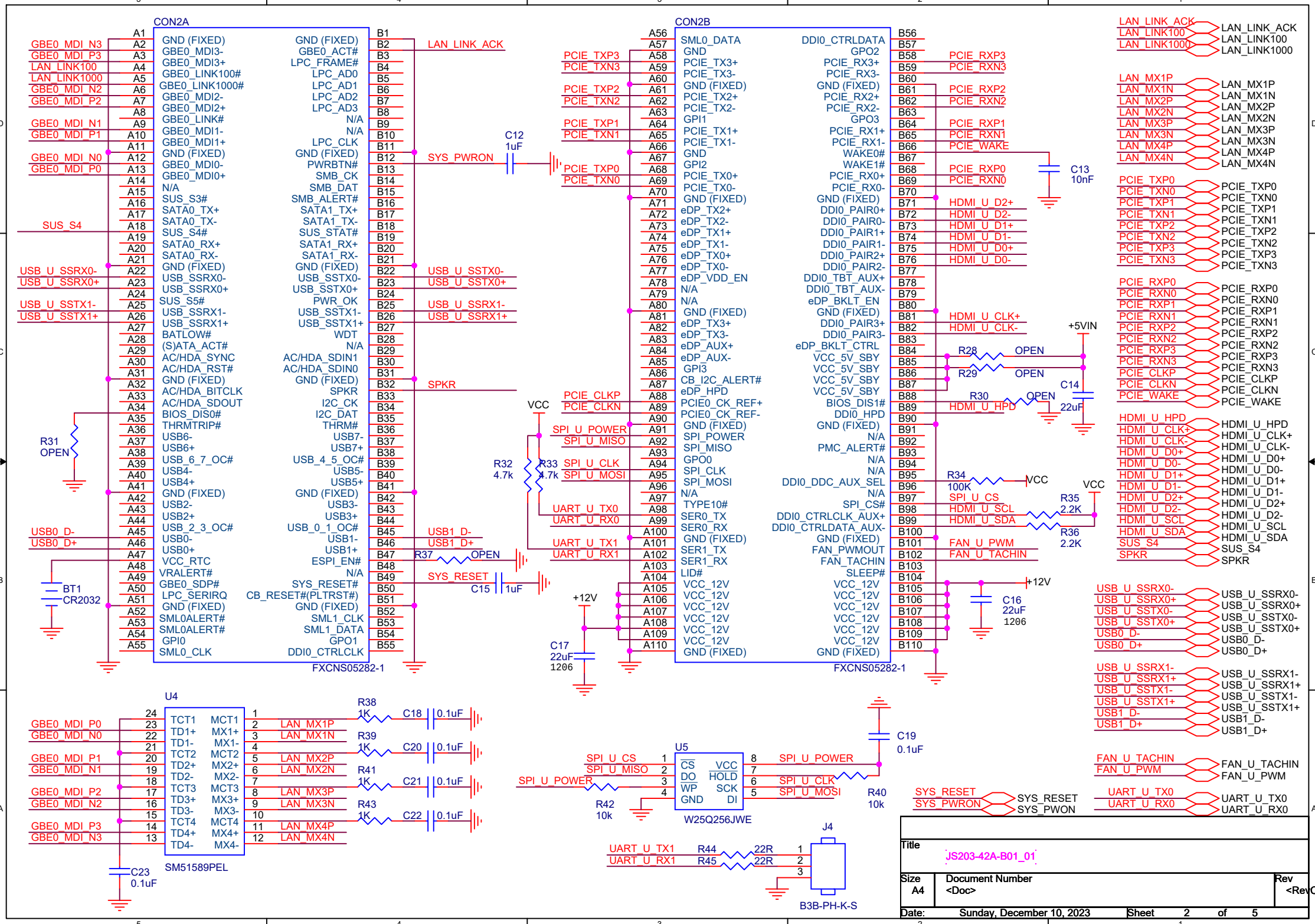
CON2A
FXCNS05282-1
CON2B
FXCNS05282-1
U4
SM51589PEL
U5
W25Q256JWE
J4
B3B-PH-K-S
BT1
CR2032
C12 1uF
C13 10nF
C14 22uF
C15 1uF
C16 22uF 1206
C17 22uF 1206
C18 0.1uF
C19 0.1uF
C20 0.1uF
C21 0.1uF
C22 0.1uF
C23 0.1uF
R28 OPEN
R29 OPEN
R30 OPEN
R31 OPEN
R32 4.7k
R33 4.7k
R34 100K
R35 2.2K
R36 2.2K
R37 OPEN
R38 1K
R39 1K
R41 1K
R43 1K
R40 10k
R42 10k
R44 22R
R45 22R
+5VIN
+12V
VCC
LAN_LINK_ACK
SYS_PWRON
SPKR
SYS_RESET
SUS_S4
Title
JS203-42A-B01_01
Size A4
Document Number <Doc>
Rev <RevC
Date: Sunday, December 10, 2023
Sheet 2 of 5

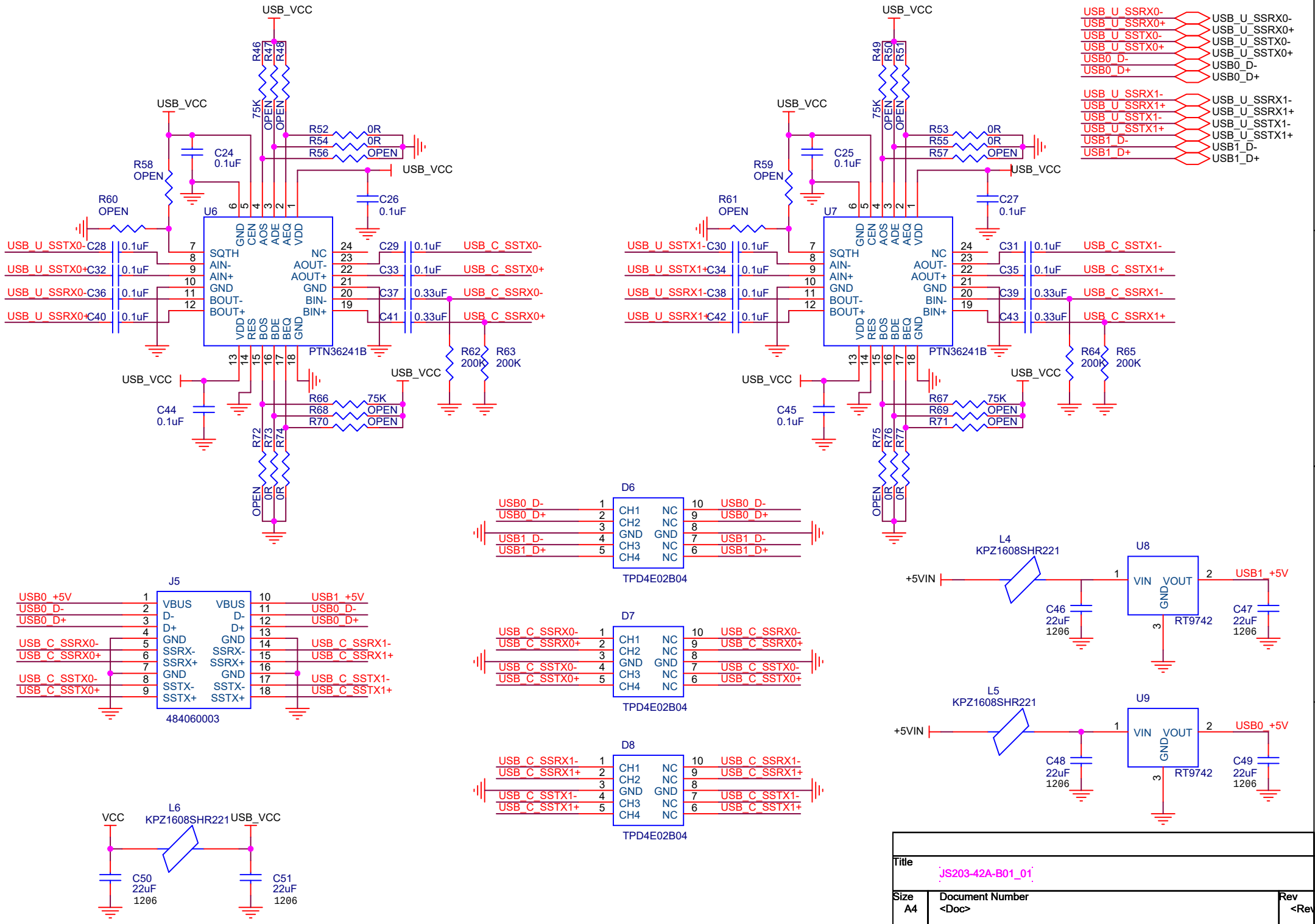

Title	JS203-42A-B01_01	
Size A4	Document Number <Doc>	Rev <RevC
Date: Sunday, December 10, 2023	Sheet 3 of 5	

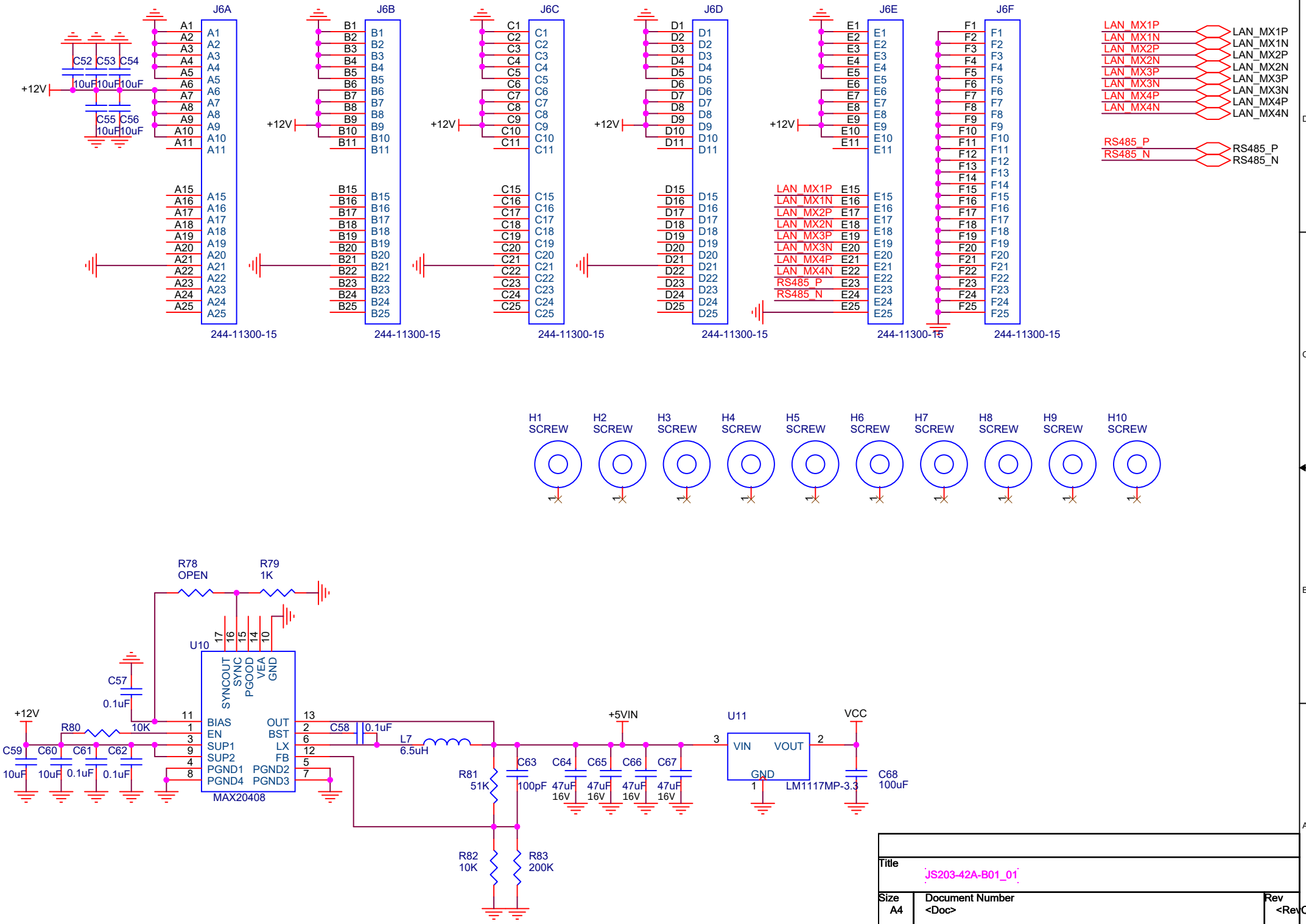

Title	JS203-42A-B01_01	
Size A4	Document Number <Doc>	Rev <RevCo
Date: Monday, December 11, 2023	Sheet 4 of 5	

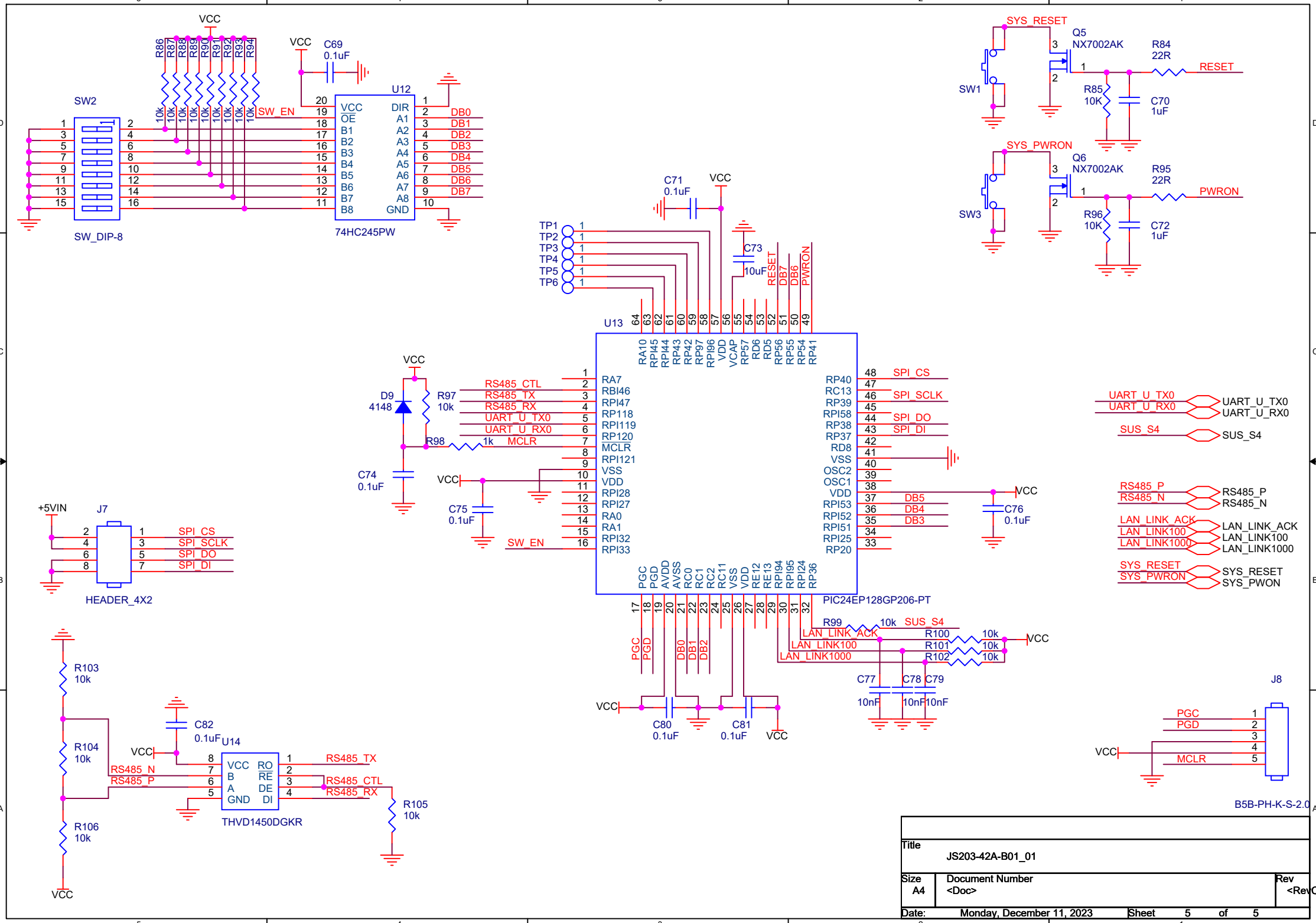
SW2
SW_DIP-8
U12
74HC245PW
VCC
C69
0.1uF
SW_EN
DB0
DB1
DB2
DB3
DB4
DB5
DB6
DB7
SYS_RESET
Q5
NX7002AK
R84
22R
RESET
R85
10K
C70
1uF
SW1
SYS_PWRON
Q6
NX7002AK
R95
22R
PWRON
R96
10K
C72
1uF
SW3
C71
0.1uF
C73
10uF
TP1
TP2
TP3
TP4
TP5
TP6
U13
PIC24EP128GP206-PT
RS485_CTL
RS485_TX
RS485_RX
UART_U_TX0
UART_U_RX0
MCLR
D9
4148
R97
10k
R98
1k
C74
0.1uF
C75
0.1uF
SPI_CS
SPI_SCLK
SPI_DO
SPI_DI
C76
0.1uF
UART_U_TX0
UART_U_RX0
SUS_S4
RS485_P
RS485_N
LAN_LINK_ACK
LAN_LINK100
LAN_LINK1000
SYS_RESET
SYS_PWRON
SYS_PWON
+5VIN
J7
HEADER_4X2
R99
10k
R100
R101
R102
C77
C78
C79
10nF
C80
0.1uF
C81
0.1uF
J8
B5B-PH-K-S-2.0
R103
10k
R104
10k
R105
10k
R106
10k
C82
0.1uF
U14
THVD1450DGKR
RS485_N
RS485_P
RS485_TX
RS485_CTL
RS485_RX
Title
JS203-42A-B01_01
Size
A4
Document Number
<Doc>
Rev
<RevC
Date:
Monday, December 11, 2023
Sheet
5
of
5