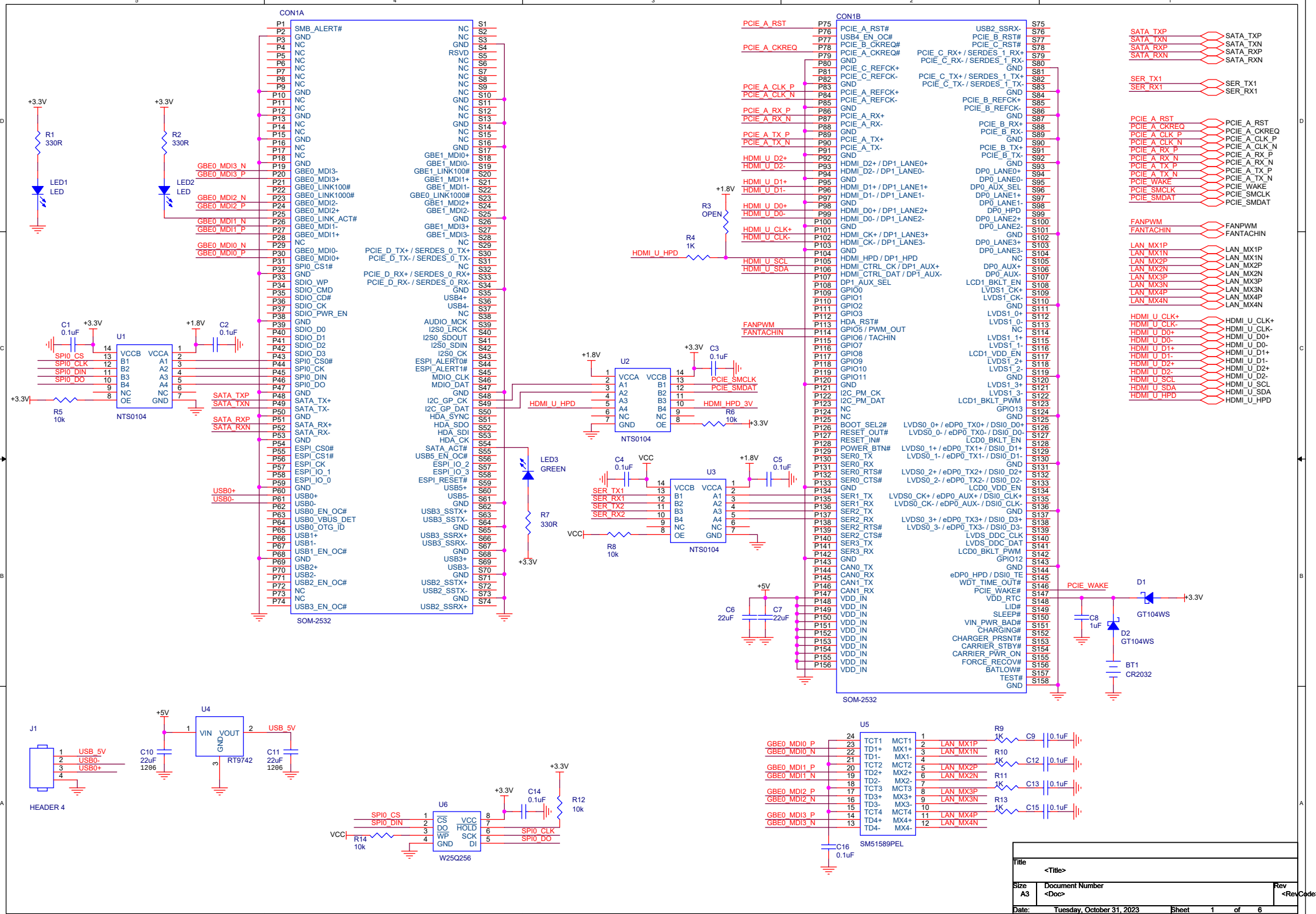
CON1A
SOM-2532
CON1B
SOM-2532
U1
NTS0104
U2
NTS0104
U3
NTS0104
U4
RT9742
U5
SM51589PEL
U6
W25Q256
J1
HEADER 4
LED1
LED
LED2
LED
LED3
GREEN
D1
GT104WS
D2
GT104WS
BT1
CR2032
R1
330R
R2
330R
R3
OPEN
R4
1K
R5
10k
R6
10k
R7
330R
R8
10k
R9
1K
R10
1K
R11
1K
R12
10k
R13
1K
R14
10k
C1
0.1uF
C2
0.1uF
C3
0.1uF
C4
0.1uF
C5
0.1uF
C6
22uF
C7
22uF
C8
1uF
C9
0.1uF
C10
22uF
1206
C11
22uF
1206
C12
0.1uF
C13
0.1uF
C14
0.1uF
C15
0.1uF
C16
0.1uF
+3.3V
+1.8V
+5V
VCC
USB_5V
HDMI_U_HPD
HDMI_HPD_3V
PCIE_SMCLK
PCIE_SMDAT
PCIE_WAKE
SATA_TXP
SATA_TXN
SATA_RXP
SATA_RXN
SER_TX1
SER_RX1
SER_TX2
SER_RX2
SPI0_CS
SPI0_CLK
SPI0_DIN
SPI0_DO
USB0+
USB0-
GBE0_MDI3_N
GBE0_MDI3_P
GBE0_MDI2_N
GBE0_MDI2_P
GBE0_MDI1_N
GBE0_MDI1_P
GBE0_MDI0_N
GBE0_MDI0_P
PCIE_A_RST
PCIE_A_CKREQ
PCIE_A_CLK_P
PCIE_A_CLK_N
PCIE_A_RX_P
PCIE_A_RX_N
PCIE_A_TX_P
PCIE_A_TX_N
HDMI_U_D2+
HDMI_U_D2-
HDMI_U_D1+
HDMI_U_D1-
HDMI_U_D0+
HDMI_U_D0-
HDMI_U_CLK+
HDMI_U_CLK-
HDMI_U_SCL
HDMI_U_SDA
FANPWM
FANTACHIN
LAN_MX1P
LAN_MX1N
LAN_MX2P
LAN_MX2N
LAN_MX3P
LAN_MX3N
LAN_MX4P
LAN_MX4N
PCIE_WAKE
PCIE_SMCLK
PCIE_SMDAT
Title
<Title>
Size
A3
Document Number
<Doc>
Rev
<RevCode>
Date:
Tuesday, October 31, 2023
Sheet
1
of
6

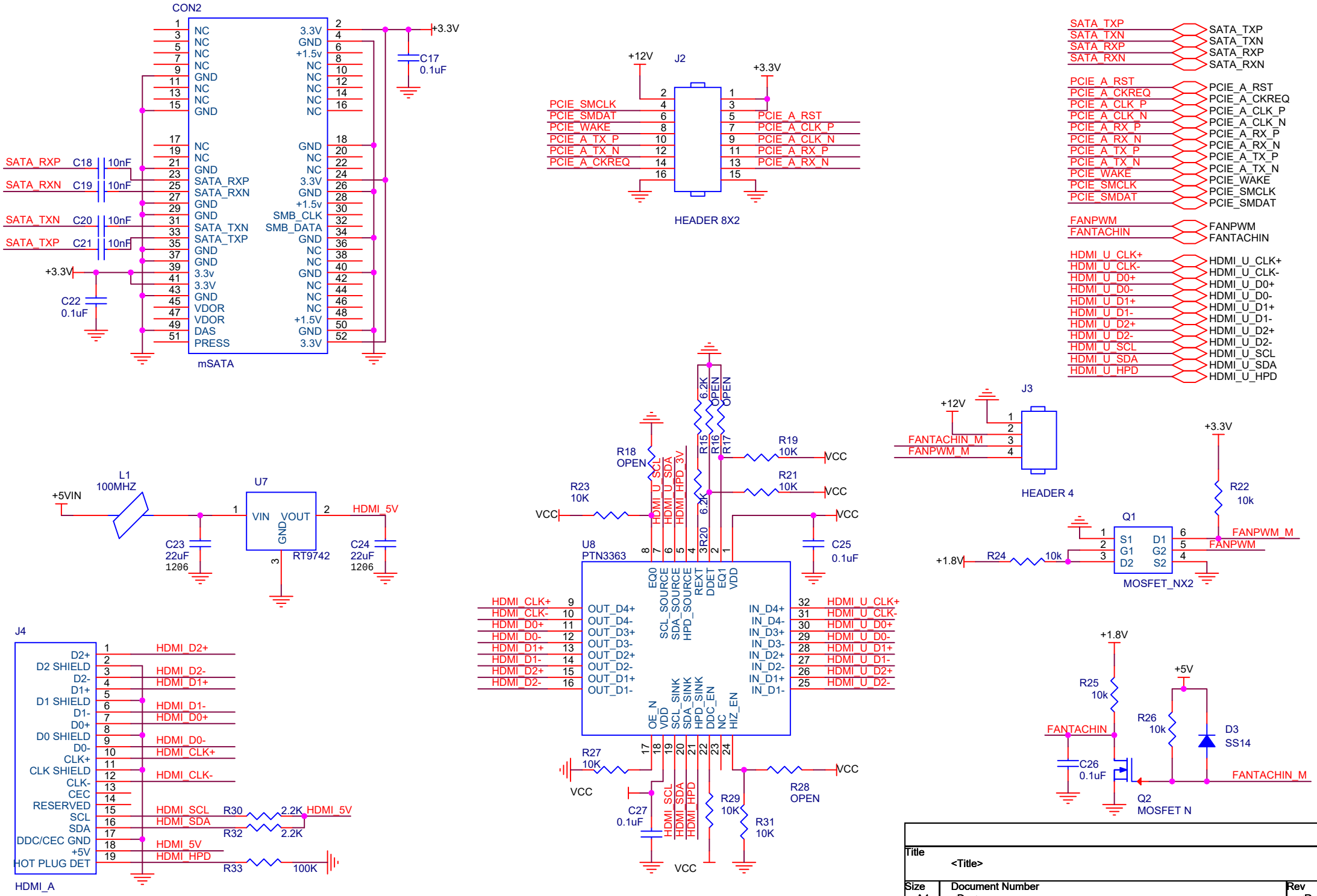

Title	<Title>
Size A4	Document Number <Doc>
Rev	<RevC>
Date: Tuesday, October 31, 2023	Sheet 2 of 6

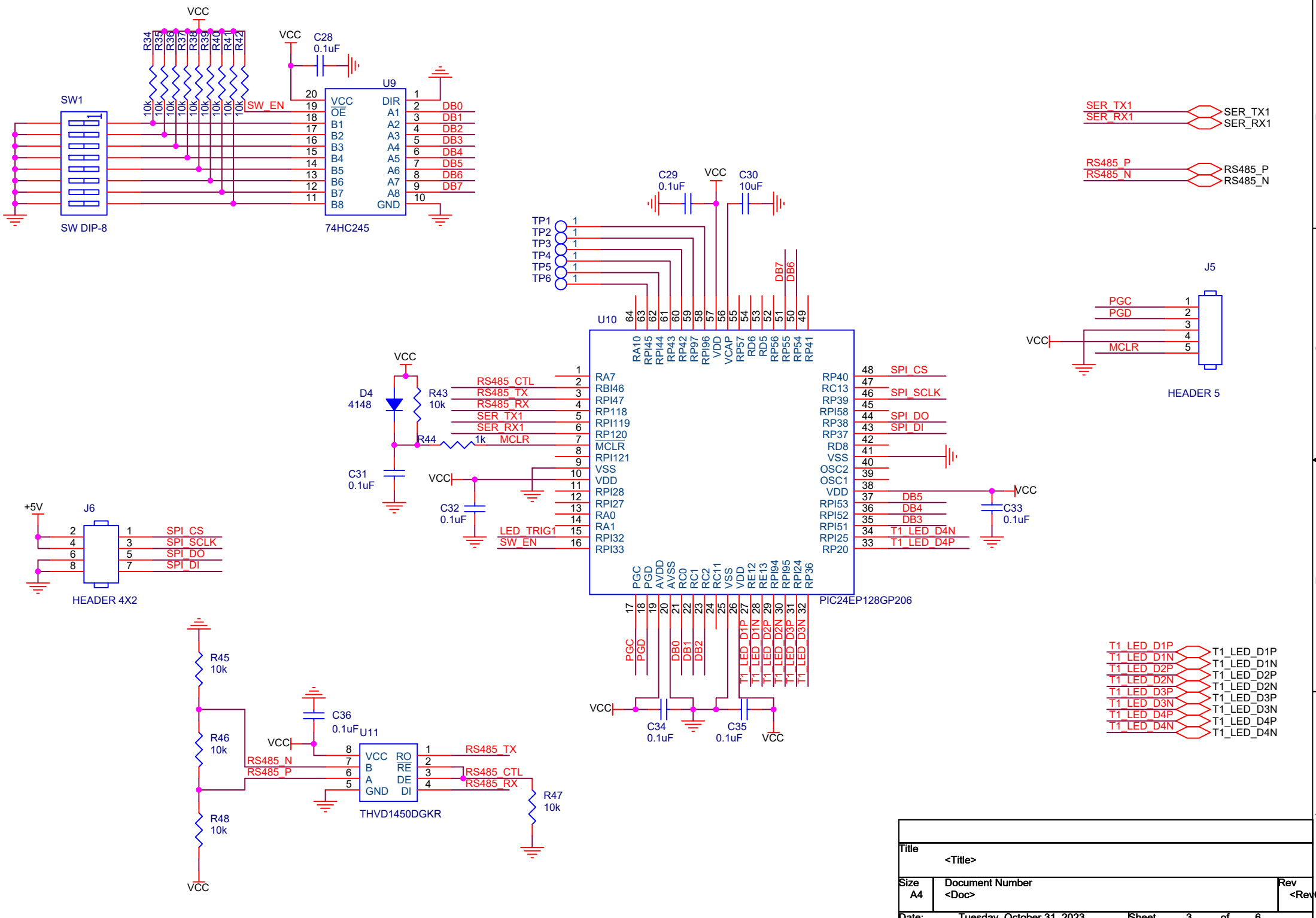

Title <Title>		
Size A4	Document Number <Doc>	Rev <RevCo
Date: Tuesday, October 31, 2023	Sheet 3 of 6	

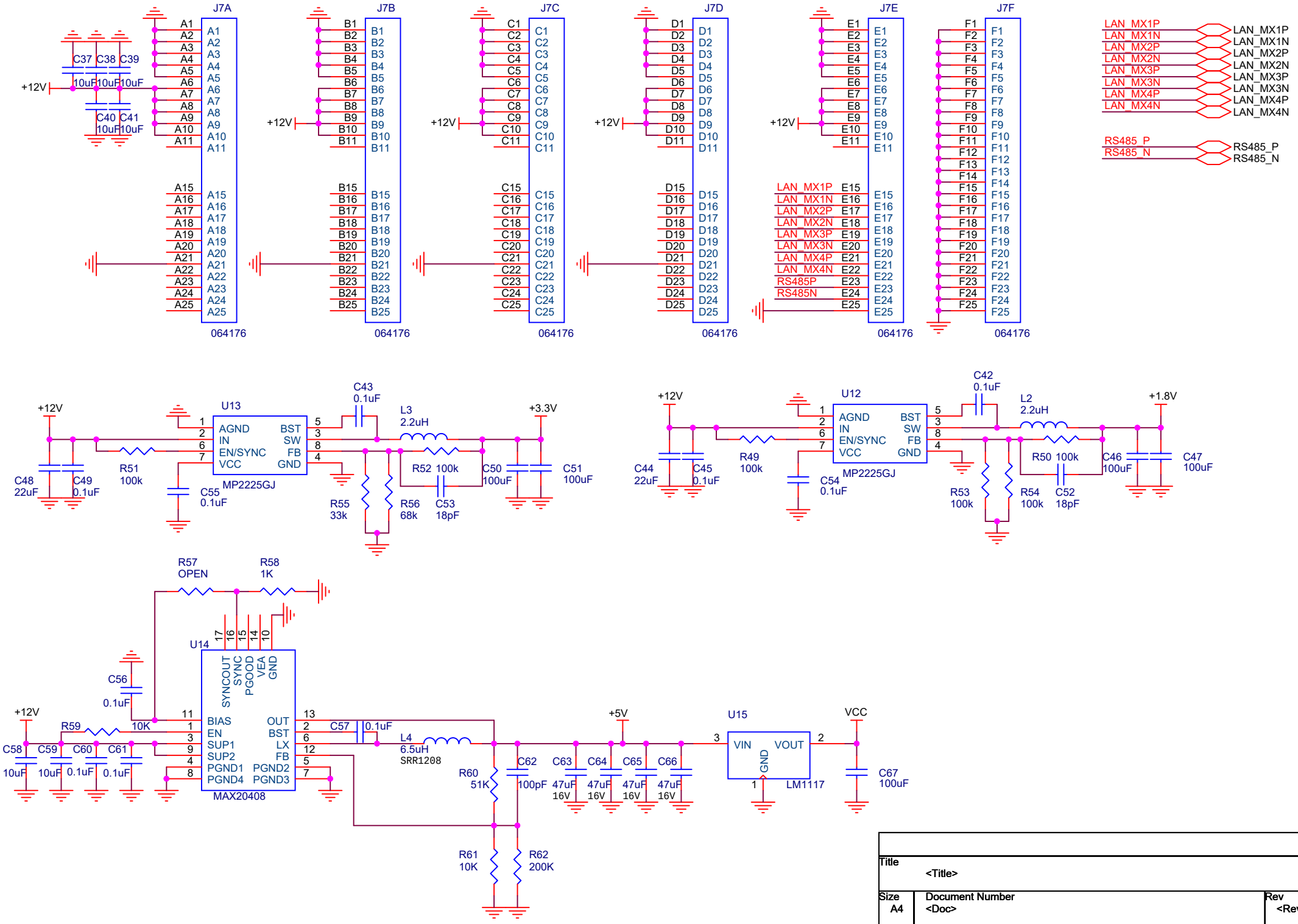

Title	<Title>	
Size A4	Document Number <Doc>	Rev <RevCo
Date: Tuesday, October 31, 2023	Sheet 4 of 6	

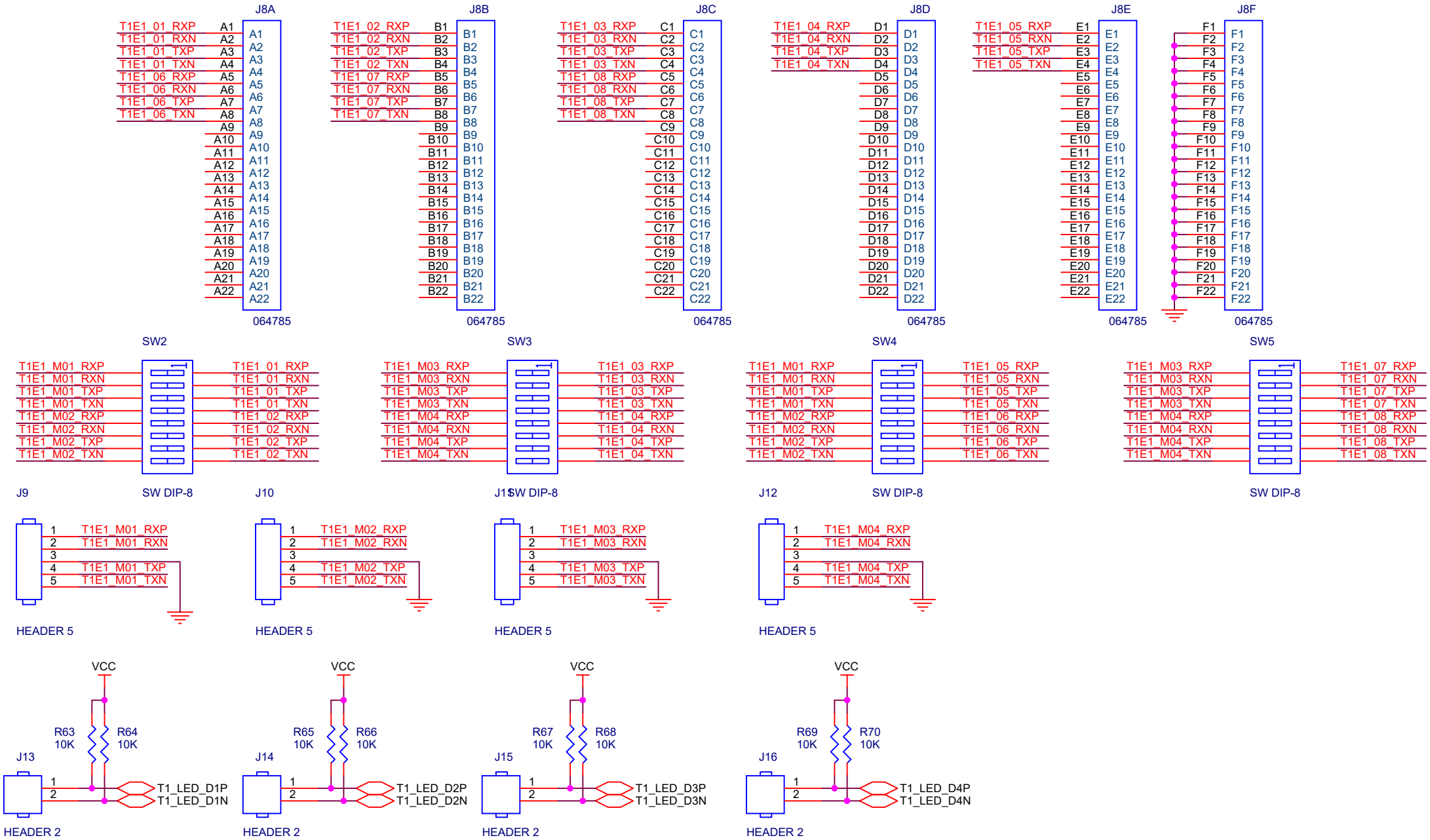

Title <Title>		
Size A4	Document Number <Doc>	Rev <RevC
Date: Tuesday, October 31, 2023	Sheet 5 of 6	

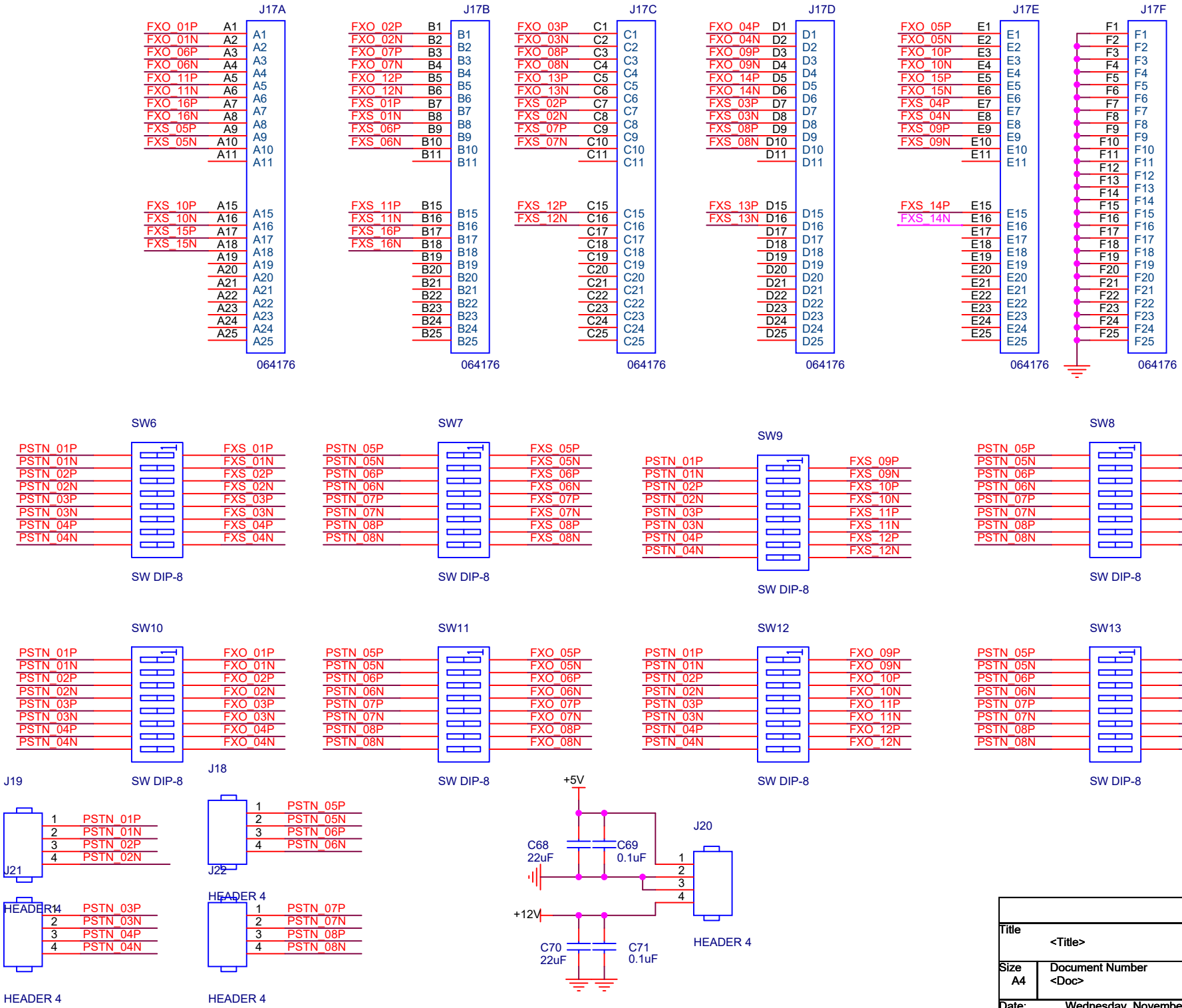

Title <Title>		
Size A4	Document Number <Doc>	Rev <RevCo
Date: Wednesday, November 08, 2023	Sheet 6 of 6	