RTCA, Inc.
1140 Connecticut Avenue, NW, Suite 1020
Washington, DC 20036-4001 USA

Minimum Operational Performance Standards (MOPS) for Airborne VOR Receiving Equipment Operating Within the Radio Frequency Range of 108-117.95 MHz

RTCA DO-196
November 17, 1986
Supersedes: RTCA DO-153A and RTCA DO-149

Prepared by: SC-153
© RTCA, Inc.

Copies of this document may be obtained from

RTCA, Inc.

Telephone: 202-833-9339
Facsimile: 202-833-9434
Internet: www.rtca.org

Please visit the RTCA Online Store for document pricing and ordering information.

F O R E W O R D

This document was prepared by Special Committee 153 of the Radio Technical Commission for Aeronautics. It was approved by RTCA on November 17, 1986, and supersedes RTCA/DO-149, "Minimum Operational Characteristics -- Airborne VHF Omnirange (VOR) Systems," January 14, 1972 and RTCA DO-153A, "Minimum Performance Standards - Airborne VOR Receiving Equipment Operating Within the Radio Frequency Range of 108-118 Megahertz," November 2, 1978.

RTCA is an association of aeronautical organizations of the United States from both government and industry. Dedicated to the advancement of aeronautics, RTCA seeks sound technical solutions to problems involving the application of electronics and telecommunications to aeronautical operations. Its objective is the resolution of such problems by mutual agreement of its member organizations.

The findings of RTCA are in the nature of recommendations to all organizations concerned. Since RTCA is not an official agency of the United States government, its recommendations may not be regarded as statements of official government policy unless so enunciated by the U. S. government organization or agency having statutory jurisdiction over any matters to which the recommendations relate.

Coordination of these standards was accomplished by RTCA SC-153 with the European Civil Organisation for Civil Aviation Electronics (EUROCAE) WG-7A.

THIS PAGE INTENTIONALLY LEFT BLANK

TABLE OF CONTENTS

	Page
FOREWORD	i
TABLE OF CONTENTS	iii
1.0 PURPOSE AND SCOPE	1
1.1 Introduction	1
1.2 System Overview	2
1.3 Operational Applications	2
1.4 Operational Goals	3
1.4.1 Sensitivity	3
1.4.2 Receiver Selectivity	3
1.4.3 Spurious Response and Intermodulation	3
1.4.4 Bearing Accuracy	3
1.4.5 Warnings	4
1.4.6 Interface with Other Aircraft Systems	4
1.5 Assumptions	4
1.6 Test Procedures	4
1.7 Definitions of Terms	6
1.8 Reference	6
2.0 VOR EQUIPMENT PERFORMANCE REQUIREMENTS AND TEST PROCEDURES	7
2.1 General Requirements	7
2.1.1 Airworthiness	7
2.1.2 Intended Function	7
2.1.3 Federal Communications Commission Rules	7
2.1.4 Fire Protection	7
2.1.5 Operation of Controls	7
2.1.6 Accessibility of Controls	7
2.1.7 Frequency Display	8
2.1.8 Effects of Test	8
2.2 Minimum Performance Standards Under Standard Test Conditions	8
2.2.1 Bearing Accuracy	8
2.2.2 Interfering Signals	8
2.2.2.1 Adjacent Channel Signals	8
2.2.2.2 Cross Modulation	9
2.2.2.3 Intermodulation	9
2.2.2.4 Multipath Interference	11
2.2.2.5 Speech and Identification Components	11
2.2.2.6 Doppler VOR Signal	11

Page

2.2.3 Course Deviation Indication 11
2.2.4 Ambiguity Indication (TO-FROM) 12
2.2.5 Non-Manual VOR Bearing Indication 12
2.2.6 Warnings 12
2.2.7 Spurious Response 13
2.2.8 Desensitization 13
2.2.9 VOICE/IDENT Audio Output Level 13
2.2.10 VOICE/IDENT Audio Frequency Response 14
2.2.11 VOICE/IDENT Audio Distortion 14
2.2.12 VOICE/IDENT Audio Output Noise Level 14
2.2.13 AGC Characteristics 14
2.2.14 Emission of Radio Frequency Energy 15
2.2.15 Receiver Voltage Standing Wave Ratio 15
2.2.16 Antenna Efficiency 15
2.2.17 Antenna Polarization 15
2.2.18 Antenna VSWR 16

2.3 Equipment Performance - Environmental Conditions 17

2.3.1 Temperature and Altitude Tests 17

2.3.1.1 Low Temperature Test 18
2.3.1.2 High Temperature Test 18
2.3.1.3 Altitude Tests 18
2.3.1.4 Decompression Test 19
2.3.1.5 Overpressure Test 19

2.3.2 Temperature Variation Test 19
2.3.3 Humidity Test 20
2.3.4 Shock Tests 20

2.3.4.1 Operational Shocks 20
2.3.4.2 Crash Safety Shocks 20

2.3.5 Vibration Tests 20
2.3.6 Explosion Test 21
2.3.7 Waterproofness Test 21

2.3.7.1 Drip Proof Test 21
2.3.7.2 Spray Proof Test 21

2.3.8 Fluids Susceptibility Tests 21

2.3.8.1 Spray Test 21
2.3.8.2 Immersion Test 22

2.3.9 Sand and Dust Test 22
2.3.10 Fungus Resistance Test 22
2.3.11 Salt Spray Test 23
2.3.12 Magnetic Effect Test 23
2.3.13 Power Input Tests 23

Page

2.3.13.1 Normal Operating Conditions 23
2.3.13.2 Abnormal Operating Conditions 23

2.3.14 Voltage Spike Conducted Test 23

2.3.14.1 Voltage Spike Category A Requirements 23
2.3.14.2 Voltage Spike Category B Requirements 24

2.3.15 Audio Frequency Conducted Susceptibility Test 24
2.3.16 Induced Signal Susceptibility Test 24
2.3.17 Radio Frequency Susceptibility Test (Radiated and Conducted) 24
2.3.18 Emission of Radio Frequency Energy Test 24

2.4 Equipment Test Procedures 25

2.4.1 Definitions of Terms and Conditions of Tests 25
2.4.2 Description of Test Equipment 27
2.4.3 Detailed Test Procedures 28

2.4.3.1 Bearing Accuracy 29
2.4.3.2 Interfering Signals 31
2.4.3.3 Course Deviation Indication 39
2.4.3.4 Ambiguity Indication (TO-FROM) 39
2.4.3.5 Non-Manual VOR Bearing Indication 39
2.4.3.6 Warnings 40
2.4.3.7 Spurious Response 40
2.4.3.8 Desensitization 40
2.4.3.9 VOICE/IDENT Aduio Output Level 41
2.4.3.10 VOICE/IDENT Audio Frequency Response 43
2.4.3.11 VOICE/IDENT Audio Distortion 44
2.4.3.12 VOICE/IDENT Audio Output Noise Level 44
2.4.3.13 AGC Characteristics 44
2.4.3.14 Emission of Radio Frequency Energy 45
2.4.3.15 Receiver VSWR 45
2.4.3.16 Antenna Efficiency 45
2.4.3.17 Antenna Polarization 46
2.4.3.18 Antenna VSWR 46

3.0 INSTALLED EQUIPMENT PERFORMANCE 49

3.1 Equipment Installation 49

3.1.1 Equipment Accessibility 49
3.1.2 Aircraft Environment 49
3.1.3 Display Visibility 49
3.1.4 Antenna Location Considerations 49
3.1.5 Failure Protection 49
3.1.6 Inadvertent Turnoff 49
3.1.7 Aircraft Power Source 49

Page

3.2 Installed Equipment Performance Requirements 50

3.2.1 Interference Effects 50

3.3 Conditions of Test 50

3.3.1 Power Input 50
3.3.2 Associated Equipment or Systems 50
3.3.3 Environment 50
3.3.4 Adjustment of Equipment 50

3.4 Test Procedures for Installed Equipment Performance 51

3.4.1 Ground Test Procedures 51

3.4.1.1 Conformity Inspection 51
3.4.1.2 Equipment Function 51
3.4.1.3 Interference Effects 51
3.4.1.4 Power Supply Fluctuations 51
3.4.1.5 Equipment Accessibility 52

3.4.2 Flight Test Procedures 52

3.4.2.1 Displayed Data Readability 52
3.4.2.2 Interference Effects 52

4.0 EQUIPMENT OPERATIONAL PERFORMANCE CHARACTERISTICS 53

4.1 Required Operational Performance Requirements 53

4.1.1 Power Input 53
4.1.2 Equipment Operating Modes 53

4.2 Test Procedures for Operational Performance Requirements 53

4.2.1 Power Input 53
4.2.2 Equipment Operating Modes 53

MEMBERSHIP 55

APPENDIX A VOR 9,960 Hz Harmonic Generator and AM Modulator and Signal Mixer
APPENDIX B Statistical Procedure for the Determination of VOR Bearing Accuracy
APPENDIX C Receiver RF Input Voltage (Hard & Easy Microvolts)

1.0 PURPOSE AND SCOPE

1.1 Introduction

This document contains minimum operational performance standards for airborne VHF Omnidirectional Range (VOR) receiving equipment. These standards specify system characteristics that should be useful to designers, manufacturers, installers and users of the equipment.

Compliance with these standards is recommended as one means of assuring that the equipment will perform its intended function satisfactorily under all conditions normally encountered in routine operations.

Any regulatory application of this document is the sole responsibility of appropriate governmental agencies.

Section 1.0 provides information needed to understand the rationale for equipment characteristics and requirements stated in the remaining sections. It describes typical equipment applications and operational goals and establishes the basis for the standards stated in Sections 2.0 through 4.0. Definitions and assumptions essential to proper understanding of this document are also provided in Section 1.0.

Section 2.0 contains the minimum performance standards for the equipment. These standards specify the required performance under standard and environmental conditions. Also included are recommended bench test procedures necessary to demonstrate equipment compliance with the stated minimum requirements.

Section 3.0 describes the performance required of the installed equipment. Tests for the installed equipment are included when performance cannot be adequately determined through bench testing.

Section 4.0 describes the operational performance characteristics for equipment installations and defines conditions that will assure the equipment user that operations can be conducted safely and reliably in the expected operational environment.

This document considers an equipment configuration consisting of: Antenna system(s), transmission lines, radio receiver, omni converter and a course deviation indication display. Additional functions and components that refer to expanded equipment capabilities are identified as optional features.

The word "system" as used in this document refers to the VOR system. It includes all portions of both the VOR ground transmitter and the VOR airborne equipment.

The word "equipment" as used in this document includes all components and units necessary for the system to properly perform

its intended function. For example, the "equipment" may include an antenna, a receiver unit, omni converter, course deviation indicator, a shock mount, etc. In the case of this example, all of the foregoing components and units comprise the "equipment." It should not be inferred from this example that each airborne VOR receiving equipment design will necessarily include all of the foregoing components or units. This will depend on the specific design chosen by the manufacturer.

If the equipment implementation includes a computer software package, use the guidelines contained in RTCA/DO-178A, "Software Considerations in Airborne Systems and Equipment Certification."

1.2 System Overview

The VOR system consists of the VOR airborne equipment and VOR ground station transmitter operating in the frequency range of 108 to 117.95 MHz.

The ground station transmits an RF signal with two 30 Hz modulated signals. The relative phase of the two 30 Hz signals defines radial lines in space with respect to the ground station. The VOR ground station antenna is normally aligned in such a manner that its 0 degree radial agrees with the area's magnetic north. Each VOR transmitter also transmits an identifier so it can be positively identified.

The VOR airborne equipment receives, detects and presents this information in such a way that the relative bearing with respect to the ground transmitter can be determined. With this type of presentation, any bearing with respect to the ground station can be selected and flown.

1.3 Operational Applications

Airborne VOR receiver equipment is used in a variety of ways. For example, in the simplest applications, VOR receiving equipment provides course deviation indication to the pilot when flying along the routes defined by VOR ground stations (i.e. victor airways). The airborne VOR equipment may also provide bearing input into an area navigation (RNAV) computer for direct point-to-point flights. In addition, the VOR receiving equipment may provide input into horizontal situation indicators (HSI), radio magnetic indicators (RMI), flight directors or electronic flight instrumentation systems (EFIS).

It is anticipated that VORs will continue to provide navigation guidance to support both en route and terminal area flight operations. With the advent of FAA's NAS plan and the stated intent to network VORs, it is anticipated that the use of the VOR as an input sensor for a navigation computer will be even more prevalent in the future.

1.4 Operational Goals

Operational goals of the VOR equipment are described in the following paragraphs. Only general operational goals are identified. Detailed operational requirements for the equipment are contained in Sections 2.0, 3.0 and 4.0.

1.4.1 Sensitivity

The RF sensitivity of the installed VOR equipment should be such that its performance meets the overall requirements of the remaining sections of this document in the presence of a standard VOR signal having a power density of -120 dBW/m^2 (20 microvolts/meter) or greater.

1.4.2 Receiver Selectivity

The equipment should have sufficient selectivity in all modes of operation to provide the pilot with safe and accurate service within the VOR service volume. It should provide positive audio and/or visual identification of the ground station to which the VOR is tuned in the presence of undesired signals at the relative signal levels and frequency separations specified in Section 2.0. The bearing information should meet the accuracy requirements contained in Section 2.0 in the presence of undesired signals at the relative signal levels and frequency separations specified in Section 2.0.

1.4.3 Spurious Response and Intermodulation

Equipment spurious responses or intermodulation effects should not inhibit the pilot from receiving VOR signals within the facility's operational service volume.

1.4.4 Bearing Accuracy

The basic purpose of a VOR is to enable a pilot to fly from one point to another and to stay within a given volume of airspace in the process. Total system accuracy should permit a pilot to stay within this airspace. A portion of the total bearing accuracy error budget is allocated to the airborne equipment. The airborne equipment should be capable of meeting this bearing accuracy even if antenna impedances are changed, as might occur during in-flight icing conditions, or if the receiver is slightly detuned, as might occur during in-flight temperature changes.

The total error of the airborne VOR equipment bearing information, as presented to the pilot in flight, shall not exceed 3.0 degrees with a probability of 95%. This bearing accuracy requirement applies to any VOR bearing information that is provided for use in aircraft navigation.

1.4.5 Warnings

A warning system will be incorporated into the equipment to activate a warning display such as instrument flags, and to activate the appropriate circuits in associated systems when any unsafe or unreliable condition exists.

Warnings will be integral to the primary VOR flight guidance indicator(s) such as CDI, HSI, RMI and EFIS. The warning indication should be easily discernible and indicate unacceptable conditions, e.g., absence of an RF signal from the ground elements, failure in the airborne equipment.

1.4.6 Interface with Other Aircraft Systems

The equipment may provide inputs to other airborne systems. It may provide signals that are adaptable for use by other aircraft instruments, navigation equipment and automatic flight controls.

Certain VOR airborne equipment may be used to provide sensor inputs to RNAV systems. In these circumstances, attention should be focused on the compatibility of VOR output navigation signals with RNAV system input requirements.

VOR signal interface with other airborne equipment intended for use during flight should not result in a condition whose presence or continuation would be detrimental to the safe conduct of flight.

1.5 Assumptions

This document assumes a 50 ohm nominal input impedance for the antenna port. All RF levels in this document are in dBm unless otherwise specified (refer to Appendix C).

1.6 Test Procedures

The test procedures specified in this document are intended to be used as one means of demonstrating compliance with the performance requirements contained in Section 2.0. Although specific test procedures are cited, it is recognized that other methods may be preferred. These alternate procedures may be used if they provide at least equivalent information. In such cases, the procedures cited herein should be used as one criterion in evaluating the acceptability of the alternate procedures.

The order of tests specified suggests that the equipment be subjected to a succession of tests as it moves from design, and design qualification, into operational use. For example, compliance with the requirements of Section 2.0 shall have been demonstrated as a precondition to satisfactory completion of the installed system tests of Section 3.0.

Four types of test procedures are specified. These include:

a. Environmental Tests

Environmental tests are in Subsection 2.3. The procedures and their associated limit requirements are intended to provide a laboratory means of determining the electrical and mechanical performance of the equipment under environmental conditions expected to be encountered in actual operations.

Unless otherwise specified, the environmental conditions and test procedures contained in RTCA/DO-160B, "Environmental Conditions and Test Procedures for Airborne Equipment," will be used to demonstrate equipment compliance.

b. Bench Tests

Bench test procedures are in Subsection 2.4. These tests provide a laboratory means of demonstrating compliance with the requirements of Subsections 2.1 and 2.2. Test results may be used by equipment manufacturers as design guidance, for monitoring manufacturing compliance and, in certain cases, for obtaining formal approval of equipment design.

c. Installed Equipment Tests

The installed equipment test procedures and their associated limits are specified in Section 3.0. Although bench and environmental test procedures are not included in the installed equipment tests, their successful completion is a precondition to completion of the installed tests. In certain instances, however, installed equipment tests may be used in lieu of bench test simulation of such factors as power supply characteristics, interference from or to other equipment installed on the aircraft, etc. Installed tests are normally performed under two conditions:

(1) With the aircraft on the ground and using simulated or operational system inputs.

(2) With the aircraft in flight using operational system signals appropriate to the equipment under test.

Test results may be used to demonstrate functional performance in the intended operational environment.

d. Operational Tests

The operational tests are specified in Section 4.0. These test procedures and their associated limits are intended to be conducted by operating personnel as one means of ensuring that the equipment is functioning properly and can be reliably used for its intended function.

1.7 Definitions of Terms

Automatic Gain Control (AGC) - A method of automatically maintaining a substantially constant audio output volume over a range of variation of input volume.

Cone of Silence (also called the Cone of Confusion) - Within the operational service volume, azimuth signal information permitting satisfactory avionics performance is normally provided up to an elevation angle of 60 degrees above the horizontal plane of the ground station's antenna. At higher elevation angles, the azimuth signal information may not be usable. The resultant cone of airspace is called the cone of silence.

Expanded Service Volume - Standard service volumes are defined in the Airman's Information Manual (AIM) and in the U. S. National Aviation Standard for the VOR/DME/TACAN Systems (AC 00-31A). The remaining portions of the operational service volumes are made up of expanded service volumes (ESVs). ESVs are approved using the same signal standards/tolerances and ground/flight check certification procedures as those applicable to the standard service volume. Typically, an ESV might be an expansion in range of a few miles or an expansion in altitude of a few thousand feet. In some cases, however, these expansions are much larger. Although not widely advertized as individual entities, ESVs are available for use via the high altitude and low altitude en route charts.

Operational Service Volume - The VOR operational service volume is that volume of airspace certified for operational use by the FAA. It includes the standard service volume (SSV) (excluding any portion of the SSV which has been restricted) and expanded service volumes (ESVs). Throughout this airspace, the user can reasonably expect that the ground station will provide at least a certain minimum signal strength, that the ground station's frequency will have been selected so as to provide certain minimum desired to undesired signal ratios, and that the signal will meet certain minimum standards for course quality. While there may be airspace outside the operational service volume where these same minimums are met, the FAA only certifies the operational service volume.

1.8 Reference

a. FAA Advisory Circular AC No. 00-31A, September 20, 1982.

2.0 VOR EQUIPMENT PERFORMANCE REQUIREMENTS AND TEST PROCEDURES

2.1 General Requirements

2.1.1 Airworthiness

The manufacturer shall design the equipment to meet the requirements of Section 2.0 of this MOPS. The manufacturer shall also conduct testing to demonstrate that the equipment performs within specification limits, is free from manufacturing defects, and will operate in the specified environments provided that the equipment is installed in accordance with manufacturer's installation instructions.

2.1.2 Intended Function

The equipment shall perform its intended function(s), as defined by the manufacturer, and its proper use shall not create a hazard to other users of the National Airspace System.

2.1.3 Federal Communications Commission Rules

All equipment shall comply with the applicable rules of the Federal Communications Commission.[1]

2.1.4 Fire Protection

All materials used shall be self-extinguishing except for small parts (such as knobs, fasteners, seals, grommets and small electrical parts) that would not contribute significantly to the propagation of a fire.

NOTE: One means of showing compliance is contained in Federal Aviation Regulations (FAR), Part 25, Appendix F.

2.1.5 Operation of Controls

The equipment shall be designed so that controls intended for use during flight cannot be operated in any position, combination or sequence which would result in a condition detrimental to the reliability of the equipment or operation of the aircraft.

2.1.6 Accessibility of Controls

Controls for use during flight shall be accessible from a pilot's normal seated position. Controls that are not normally adjusted in flight shall not be readily available to flight personnel.

---

[1] It is not intended that this requirement relating to FCC rules be interpreted as a precondition for obtaining other applicable approvals, such as an FAA TSO authorization.

2.1.7 Frequency Display

In order to avoid confusion, the frequency or paired channel or the identification of the navigation facility or facilities in active use must be displayed or capable of recall at all times during flight.

2.1.8 Effects of Test

The equipment shall be designed so that the application of specified test procedures shall not be detrimental to equipment performance following the application of these tests, except as specifically allowed.

2.2 Minimum Performance Standards Under Standard Test Conditions

2.2.1 Bearing Accuracy

a. The bearing information as presented to the pilot shall not have an error in excess of three degrees using the standard signal conditions outlined in paragraph 2.4.3.1 a.

b. The bearing information as presented to the pilot shall not have an error in excess of three degrees with a statistical probability of 95% using the signal conditions of paragraph 2.4.3.1 b.

2.2.2 Interfering Signals

2.2.2.1 Adjacent Channel Signals

The bearing information presented to the pilot shall not change by more than one degree when a desired standard VOR test signal is present and a single undesired signal is present on any of the adjacent channels (above or below) at levels defined as follows:

a. With a desired VOR signal level of -93 dBm and an undesired, first adjacent channel VOR signal varied from -113 to -59 dBm.

b. With a desired VOR signal level varied over the range of -93 dBm to -53 dBm and an undesired second adjacent channel VOR signal at any level up to -33 dBm or 46 dB maximum above the desired signal.

c. With a desired VOR signal level of -93 dBm and an undesired first adjacent channel localizer signal varied from -113 to -59 dBm.

d. With a desired VOR signal level varied over the range of -93 to -53 dBm and an undesired second adjacent channel localizer signal at any level up to -33 dBm or 46 dB maximum above the desired signal.

e. The undesired VOR signals shall include the harmonic content of the 9,960 subcarrier as defined in Appendix A.

f. Adjacent channel signal frequencies are defined in paragraph 2.4.1.

2.2.2.2 Cross Modulation

The bearing information as presented to the pilot shall not change by more than one degree when a desired standard VOR test signal is present at levels of -83 to -33 dBm and an undesired VOR signal is present on any assignable VOR frequency from 108.00 MHz to 117.95 MHz, excluding the first and second adjacent channels; and an undesired standard audio test signal at frequencies from 100-108 MHz and from 118.0 - 152.0 MHz at a level of -33 dBm.

2.2.2.3 Intermodulation

The bearing information as presented to the pilot shall not change by more than one degree and all valid VOR signals to remain in valid state when a -79 dBm standard VOR test signal at the receiver input is added to two simulated FM broadcast signals. The following requirements apply:

$2N_1 + N_2 + 72$ dBm ≤ 0 for FM sound broadcasting signals in the range 107.7 - 108.0 MHz

$2N_1 + N_2 + 3(24 - 20 \log \Delta f/0.4)$ dBm ≤ 0 for FM sound broadcasting signals in the range 88 - 107.7 MHz

where $\Delta f = 108.1 - F_1$, F_1 is the frequency of the signal closer to 108.00 MHz, N_1 and N_2 are the levels of the two input signals in dBm. Neither level N_1 or N_2 shall exceed the desensitization criteria set forth in paragraph 2.2.8. For receivers with input impedances other than 50 ohms an equivalent power shall be used.

NOTE: It is not required that undesired frequencies which produce a beat note of 30 Hz or 9960 Hz at the detector output be applied to the receiver.

The levels are indicated in Figure 2-1.

INTERMODULATION (Paragraph 2.2.2.3)

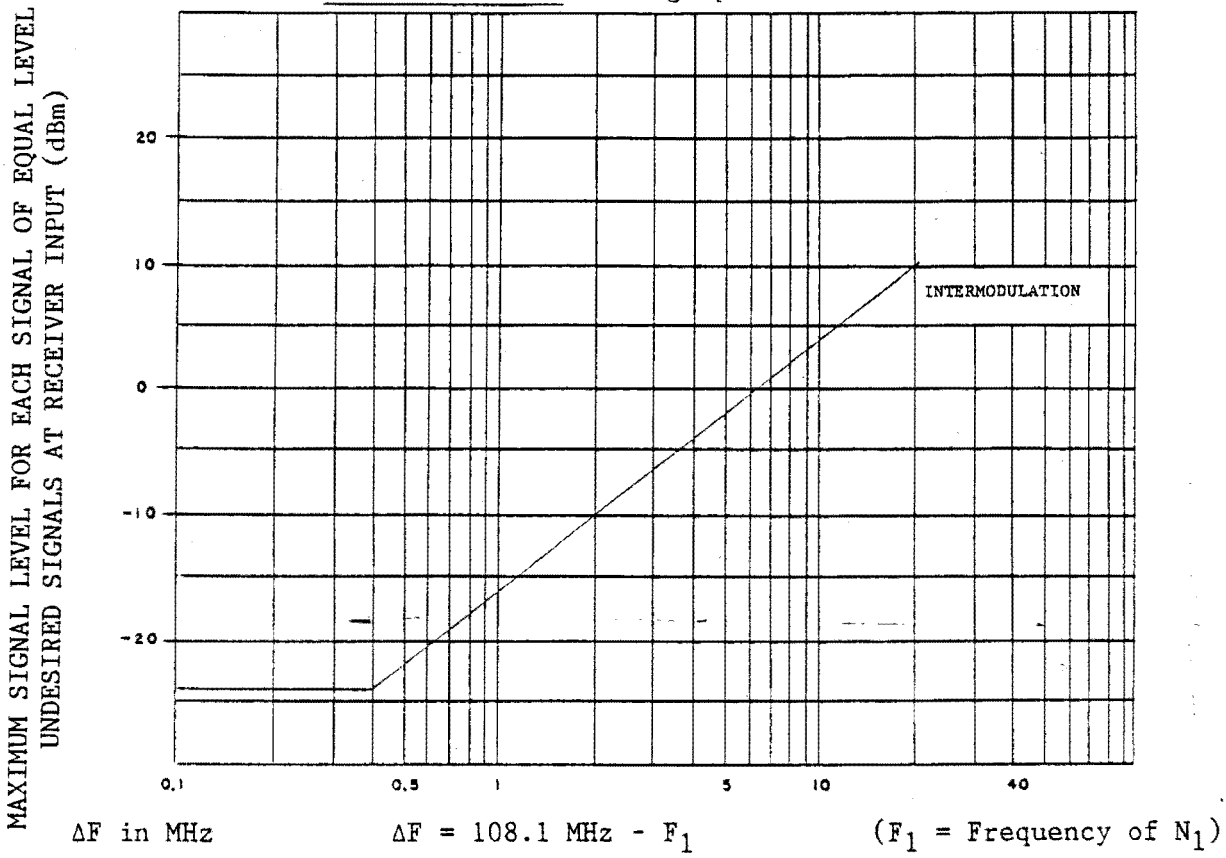

DESENSITIZATION (Paragraph 2.2.8)

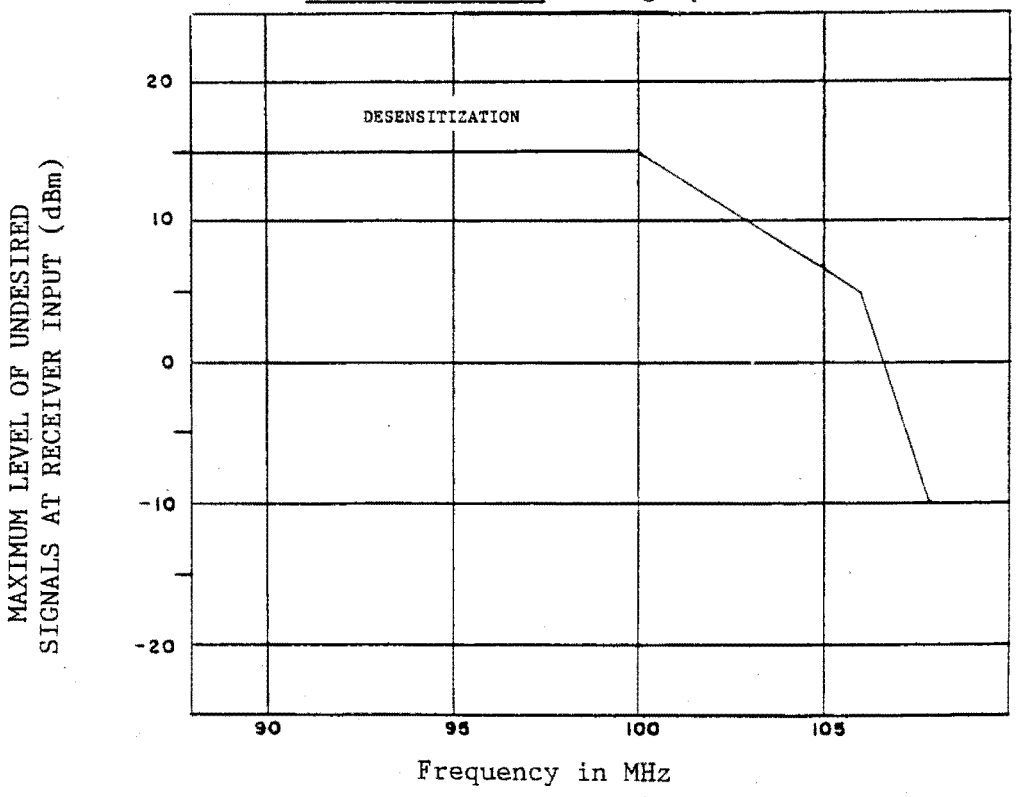

FIGURE 2-1 FREQUENCY OF UNDESIRED SIGNAL (MHZ)

2.2.2.4 Multipath Interference (Clarksburg Effect)

When a standard VOR test signal at an RF level of -79 dBm is additionally modulated to a depth of 10% by a second modulation, the error in the VOR bearing indication shall not exceed two degrees when the additional modulation is:

a. All 1 Hz increments between 1 and 25 Hz except 9 through 11 Hz i.e., 10 ±1 Hz and 13 through 17 Hz, i.e., 15 ±2 Hz.

b. All 5 Hz increments between 25 and 100 Hz, except 30, 60 and 90 Hz.

2.2.2.5 Speech and Identification Components

The bearing information as presented to the pilot shall not change by more than 0.4 degrees, when a standard VOR audio test signal at an RF level of -53 dBm is applied and the modulation signal is varied over the range 350 to 2,500 Hz.

2.2.2.6 Doppler VOR Signal

The bearing information as presented to the pilot shall not have an error in excess of one degree, when the 9,960 Hz subcarrier of a standard VOR test signal at a level of -53 dBm, is additionally amplitude modulated 40%, in turn at approximately 30, 60 and 1,500 Hz.

NOTE: EUROCAE has an additional requirement in EUROCAE MPS ED-22A, paragraph 3.2.2.3 to ensure compatibility with certain types of Doppler VOR ground stations installed in Europe and elsewhere.

2.2.3 Course Deviation Indication

If a course deviation indication is provided, the following requirements shall be met with input signal levels between -93 and -27 dBm.

a. Deviation Sensitivity - The equipment shall provide a display or electrical output for presentation of course deviation magnitude and polarity. This output shall have sufficient dynamic range to display course deviation of at least ±10 degrees with a resolution of one degree or better.

b. Deflection Linearity - The display magnitude or electrical output shall have a linearity of at least 20% of the deviation produced by a 10 degree change in phase. The display indication or electrical output shall be monotonic when the input phase difference is varied by an 80 degree change from a centered course.

c. Indicator Visibility - The display markings shall be visible from any point within the frustum of a cone, the sides of which make an angle of 45 degrees with the perpendicular to the display, and the small diameter of which is the aperture of the indicator. This requirement does not apply when viewing the indicator from aspect angles below the center of the indicator.

NOTE: Characteristics of the course deviation output of the receiver shall be compatible with the display and other functions for which it is intended. For example, the damping characteristic may differ among display processes (CDI, RMI, RNAV) and in different phases of flight.

2.2.4 Ambiguity Indication (TO-FROM)

Over the RF signal input range of -93 to -27 dBm and at all bearings up to ±75 degrees from the selected radial, the ambiguity indication shall be clearly an appropriate "TO" or "FROM."

2.2.5 Non-Manual VOR Bearing Indication (if provided)

With a standard test signal applied, the maximum permissible error of any non-manual VOR bearing indicator shall not exceed more than 2.5 degrees.

2.2.6 Warnings

A warning device shall be provided. The device shall:

a. Be at least 50% visible or in the "warning" condition in the absence of any of the following:

(1) An RF signal.

(2) 9,960 Hz modulation on an otherwise standard VOR test signal of -93 to -27 dBm.

(3) Either one of the two 30 Hz modulations on an otherwise standard VOR test signal of -93 to -27 dBm.

b. At least begin to appear, or to enter the "warning" condition, when the RF level of a standard VOR test signal is such that the deviation sensitivity is 1/2 that with a -73 dBm signal.

c. Have no warning displayed or be out of the "warning" condition when the RF level of a standard VOR test signal is varied over the range of at least -93 to -27 dBm, or the 9,960 Hz subcarrier deviation ratio is varied from 8 to 17 (±240 to ±510 Hz peak).

2.2.7 Spurious Response

The input signal level of an undesired frequency required to produce a detector-carrier (AGC) level obtained with a -93 dBm standard audio test signal shall not be less than -33 dBm when:

a. The undesired input signal frequency is within 108.0 to 137.0 MHz and is on any frequency within ±8 kHz of any assignable channel other than the desired channel and the upper and lower adjacent channels.

b. The undesired input signal frequency is between 50 kHz and 1,215 MHz excluding the band 108.0-137.0 MHz.

2.2.8 Desensitization

a. The addition of an undesired unmodulated carrier, of RF level and frequencies described below, to a standard VOR test signal at an RF input level of -79 dBm at the receiver input, on the selected channel shall not exceed the following effects on the desired signal.

(1) The bearing indication shall not change by more than 0.5 degree.

(2) The audio output level shall not change by more than 3 dB.

(3) The alarm signal shall not be in the "warning" condition.

b. The undesired unmodulated carrier will have an RF input level of -13 dBm at the receiver input terminals on any frequency from 50 kHz to 1,215 MHz except as follows:

(1) Excluding the frequency range of 108.0 to 118.5 MHz.

(2) Its level shall not exceed the levels shown in Figure 2-1 for frequencies between 88 MHz and 107.9 MHz.

Frequency (MHz)	Maximum level of unwanted signal at receiver input
88-102	+15 dBm
104	+10 dBm
106	+ 5 dBm
107.9	-10 dBm

2.2.9 VOICE/IDENT Audio Output Level

A standard audio test signal having an RF level of not more than -87 dBm shall produce an audio output level that is not less than the manufacturer's published rated output level.

2.2.10 VOICE/IDENT Audio Frequency Response

a. The difference between the maximum and minimum VOICE/IDENT audio output levels shall not exceed 6 dB, when the audio modulating frequency of an RF signal, modulated input level varied over the range of 350 to 2,500 Hz, and when the RF input level is held constant at the value which produces a signal-plus-noise-to-noise ratio of not less than 20 dB at 1,000 Hz. Beyond 2,500 Hz, the audio output level shall not increase, and at frequencies of 150 Hz and below, and 9 kHz and above, it shall be at least 20 dB below the output level at the frequency of maximum response.

b. If a "VOICE/IDENT" filter is employed in the equipment:

(1) When the "IDENT" function is selected, the requirements of subparagraph a., above, shall not apply and the 1,020 Hz keyed identity signal shall be clearly audible and the existence of voice modulation shall be evident.

(2) When the "VOICE" function is selected, the requirements of subparagraph a., above, shall apply, except frequencies near 1,020 Hz may be attenuated. The attenuation of frequencies near 1,020 Hz shall not significantly impair voice intelligibility.

2.2.11 VOICE/IDENT Audio Distortion

The combined distortion and noise in the receiver VOICE/IDENT audio output shall not exceed 25% at all levels up to the manufacturer's rated output. This requirement shall be met over the RF input range of -79 to -27 dBm, using a standard VOR audio test signal.

2.2.12 VOICE/IDENT Audio Output Noise Level

When the receiver gain is adjusted to produce rated output with a standard VOR audio test signal applied to the receiver input terminals and when the amplitude of this signal is varied over the range of -93 to -27 dBm, the signal-plus-noise-to-noise ratio of the receiver audio output shall be at least 6 dB.

If the equipment is designed for operation from an AC power source, this standard shall be met over the range of power source frequencies for which the equipment is designed.

2.2.13 AGC Characteristics

Between the limits of -93 to -27 dBm input of a standard VOR audio test signal, the difference between the maximum and the minimum VOICE/IDENT audio output levels shall not exceed 6 dB.

2.2.14 Emission of Radio Frequency Energy

a. The conducted and radiated spurious radio frequency energy emission levels shall not exceed those specified in Section 21.0 of RTCA/DO-160B, "Environmental Conditions and Test Procedures for Airborne Equipment."

b. When the receiver is terminated in a resistive load of 50 ohms, the level of any spurious emission into the load shall not exceed -57 dBm over the frequency range of 10 kHz to 10 GHz except on the following frequency ranges:

74 - 76 MHz: -64 dBm
108 - 138 MHz: -64 dBm
329.0 - 335 MHz: -64 dBm
960 - 1,215 MHz: -90 dBm

NOTE: The level of VOR receiver radiation into the aeronautical bands listed above is sufficiently low to minimize interference except when two VOR receivers share a common antenna. Preferably the local oscillator should be kept out of the band 108-138 MHz, which will also allow the use of a common antenna for two VOR receivers.

2.2.15 Receiver Voltage Standing Wave Ratio (VSWR)

When the receiver is designed for use with a transmission line, the VSWR of the receiver input terminals shall not exceed 4:1 on the operating frequency over the radio frequency range of 108-118 MHz.

2.2.16 Antenna Efficiency[1]

a. Over the frequency range 108-118 MHz, the horizontal component of the radiated signal in the forward and rearward directions shall not be down more than 10 dB when compared to the maximum radiation from a standard horizontal dipole antenna resonant at 113 MHz and mounted 10 inches above the ground plane.

b. At any frequency within 108-118 MHz, the difference between the maximum and the minimum field strength of the horizontal component of the radiated signal in the azimuth plane shall not exceed 20 dB.

2.2.17 Antenna Polarization

Over the frequency range of 108-118 MHz, the reception of vertically polarized signals from any horizontal direction with

---

[1] Although the antenna will be used as a receiving antenna, this standard is written in terms of a radiating antenna for convenience of testing.

respect to the antenna shall be at least 10 dB below the reception of horizontally polarized signals from the same direction.

2.2.18 Antenna VSWR

When the antenna to be used with the receiver is designed for use with a transmission line, the VSWR on the transmission line shall not exceed 6:1 over the radio frequency range 108-118 MHz.

2.3 Equipment Performance - Environmental Conditions

The environmental tests and performance requirements described in this subsection provide a laboratory means of determining the overall performance characteristics of the equipment under conditions representative of those which may be encountered in actual operations.

Some of the environmental tests contained in this subsection do not have to be performed unless the manufacturer wishes to qualify the equipment for that particular environmental condition. These tests are identified by the phrase "When Required." If the manufacturer wishes to qualify the equipment under any of these additional environmental conditions, then the appropriate "When Required" tests shall be performed.

Unless otherwise specified, the test procedures applicable to a determination of equipment performance under environmental test conditions are contained in RTCA Document DO-160B, "Environmental Conditions and Test Procedures for Airborne Equipment."

Some of the performance requirements in Subsections 2.1 and 2.2 are not required to be tested to all of the conditions contained in RTCA/DO-160B. Judgment and experience have indicated that these particular performance parameters are not susceptible to certain environmental conditions and that the level of performance specified in Subsections 2.1 and 2.2 will not be measurably degraded by exposure to these conditions.

NOTE: Sections 2.3.1.1 and 2.3.1.2 call out high and low temperature tests, with a bearing accuracy of three degrees maximum at 24 bearings (360 degrees in 30 degree steps, to and from). Section 2.3.2 calls out a dynamic temperature variation from the low to the high temperature limit with bearing accuracy of three degrees maximum at four points (30 degrees and 120 degrees, to and from). Section 2.4.3.1 b. (4) calls for bearing accuracy measurements at 24 bearings (360 degrees in 30 degree steps to and from), at every 10 degrees C step between the low and high temperature limits, stabilized at each temperature. These readings are utilized in the three-degree, 95 percent probability calculations in Appendix B.

2.3.1 Temperature and Altitude Tests (DO-160B, Section 4.0)

RTCA/DO-160B contains several temperature and altitude test procedures which are specified according to equipment category. These categories are included in paragraph 4.3 of DO-160B. The following subparagraphs contain the applicable test conditions specified in Section 4.0 of DO-160B.

2.3.1.1 Low Temperature Test

The equipment shall be subjected to the test conditions as specified in RTCA/DO-160B, paragraph 4.5.1, and the following requirements of this standard shall be met:

a. Paragraph 2.2.1 a. - Bearing Accuracy
b. Paragraph 2.2.3 a. - Deviation Sensitivity
c. Paragraph 2.2.4 - Ambiguity Indication (TO-FROM)
d. Paragraph 2.2.5 - Non-Manual VOR Bearing Indication
e. Paragraph 2.2.6 - Warnings
f. Paragraph 2.2.11 - VOICE/IDENT Audio Distortion

Following the test, the requirements of paragraph 2.2.18, Antenna VSWR, shall be met. Additionally, all mechanical devices shall perform their intended functions.

2.3.1.2 High Temperature Test

The equipment shall be subjected to the test conditions as specified in RTCA/DO-160B, paragraph 4.5, and the following requirements of this standard shall be met:

a. Paragraph 2.2.1 a. - Bearing Accuracy
b. Paragraph 2.2.3 a. - Deviation Sensitivity
c. Paragraph 2.2.4 - Ambiguity Indication (TO-FROM)
d. Paragraph 2.2.5 - Non-Manual VOR Bearing Indication
e. Paragraph 2.2.6 - Warnings
f. Paragraph 2.2.11 - VOICE/IDENT Audio Distortion

Following the test, the requirements of paragraph 2.2.18, Antenna VSWR, shall be met. Additionally, all mechanical devices shall perform their intended functions.

2.3.1.3 Altitude Tests

The equipment shall be subjected to the test conditions as specified in RTCA/DO-160B, paragraph 4.6.1, and the following requirements of this standard shall be met:

a. Paragraph 2.2.1 a. - Bearing Accuracy
b. Paragraph 2.2.3 a. - Deviation Sensitivity
c. Paragraph 2.2.4 - Ambiguity Indication (TO-FROM)
d. Paragraph 2.2.5 - Non-Manual VOR Bearing Indication
e. Paragraph 2.2.6 - Warnings
f. Paragraph 2.2.11 - VOICE/IDENT Audio Distortion

Following the test, the requirements of paragraph 2.2.18, Antenna VSWR, shall be met. Additionally, all mechanical devices shall perform their intended functions.

2.3.1.4 Decompression Test - (When Required)

The equipment shall be subjected to the test conditions as specified in RTCA/DO-160B, paragraph 4.6.2, and the following requirements of this standard shall be met:

a. Paragraph 2.2.1 a. - Bearing Accuracy
b. Paragraph 2.2.6 - Warnings

Following the test, the requirements of paragraph 2.2.18, Antenna VSWR, shall be met. Additionally, all mechanical devices shall perform their intended functions.

2.3.1.5 Overpressure Test - (When Required)

The equipment shall be subjected to the test conditions as specified in RTCA/DO-160B, paragraph 4.6.3, and the following requirements of this standard shall be met:

a. Paragraph 2.2.1 a. - Bearing Accuracy
b. Paragraph 2.2.6 - Warnings

Following the test, the requirements of paragraph 2.2.18, Antenna VSWR, shall be met. Additionally, all mechanical devices shall perform their intended functions.

2.3.2 Temperature Variation Test (DO-160B, Section 5.0)

The equipment shall be subjected to the test conditions as specified in RTCA/DO-160B, paragraph 5.3, and the following requirements of this standard shall be met:

a. Paragraph 2.2.1 a. - Bearing Accuracy
b. Paragraph 2.2.3 a. - Deviation Sensitivity
c. Paragraph 2.2.4 - Ambiguity Indication (TO-FROM)
d. Paragraph 2.2.5 - Non-Manual VOR Bearing Indication
e. Paragraph 2.2.6 - Warnings
f. Paragraph 2.2.11 - VOICE/IDENT Audio Distortion

NOTE: For the Temperature Variation Test, bearing accuracy data shall be taken at the two quadrature bearing points of 30 degrees and 120 degrees rather than at each 30 degree incremental setting throughout 360 degrees as specified in paragraph 2.4.3.1.

Following the test, the requirements of paragraph 2.2.18, Antenna VSWR, shall be met. Additionally, all mechanical devices shall perform their intended functions.

2.3.3 Humidity Test (DO-160B, Section 6.0)

The equipment shall be subjected to the test conditions as specified in RTCA/DO-160B, paragraph 6.3, and the following requirements of this standard shall be met:

a. Paragraph 2.2.1 a. - Bearing Accuracy
b. Paragraph 2.2.3 a. - Deviation Sensitivity
c. Paragraph 2.2.4 - Ambiguity Indication (TO-FROM)
d. Paragraph 2.2.5 - Non-Manual VOR Bearing Indication
e. Paragraph 2.2.6 - Warnings
f. Paragraph 2.2.11 - VOICE/IDENT Audio Distortion

Following the test, the requirements of paragraph 2.2.18, Antenna VSWR, shall be met. Additionally, all mechanical devices shall perform their intended functions.

2.3.4 Shock Tests (DO-160B, Section 7.0)

2.3.4.1 Operational Shocks

The equipment shall be subjected to the test conditions as specified in RTCA/DO-160B, paragraph 7.2.1, and the following requirements of this standard shall be met:

a. Paragraph 2.2.1 a. - Bearing Accuracy
b. Paragraph 2.2.6 - Warnings

Following the test, the requirements of paragraph 2.2.18, Antenna VSWR, shall be met. Additionally, all mechanical devices shall perform their intended functions.

2.3.4.2 Crash Safety Shocks

The application of the Crash Safety Shock tests may result in damage to the equipment under test. Therefore this test may be conducted after the other tests have been completed. In this case, paragraph 2.1.8, "Effects of Test," does not apply.

The equipment shall be subjected to the test conditions as specified in RTCA/DO-160B, paragraph 7.3, and shall meet the requirements specified therein.

2.3.5 Vibration Tests (DO-160B, Section 8.0)

The equipment shall be subjected to the test conditions as specified in RTCA/DO-160B, Section 8.0, and the following requirements of this standard shall be met:

a. Paragraph 2.2.1 a. - Bearing Accuracy
b. Paragraph 2.2.6 - Warnings

Following the test, the requirements of paragraph 2.2.18, Antenna VSWR, shall be met.

2.3.6 Explosion Test (DO-160B, Section 9.0) (When Requied)

The equipment shall be subjected to the test conditions as specified in RTCA/DO-160B, Section 9.0. During these tests, the equipment shall not cause detonation of the explosive mixture within the test chamber.

2.3.7 Waterproofness Test (DO-160B, Section 10.0)

2.3.7.1 Drip Proof Test (When Required)

The equipment shall be subjected to the test conditions as specified in RTCA/DO-160B, paragraph 10.3.1, and the following requirements of this standard shall be met:

a. Paragraph 2.2.1 a. - Bearing Accuracy
b. Paragraph 2.2.6 - Warnings
c. Paragraph 2.2.18 - Antenna VSWR

2.3.7.2 Spray Proof Test (When Required)

The equipment shall be subjected to the test conditions as specified in RTCA/DO-160B, paragraph 10.3.2, and the following requirements of this standard shall be met:

a. Paragraph 2.2.1 a. - Bearing Accuracy
b. Paragraph 2.2.6 - Warnings
c. Paragraph 2.2.18 - Antenna VSWR

This test shall be conducted with the spray directed perpendicular to the most vulnerable area(s) of the equipment as determined by the equipment manufacturer.

2.3.8 Fluids Susceptibility Tests (DO-160B, Section 11.0)

The following subparagraphs contain the applicable test conditions specified in Section 11.0 of DO-160B.

2.3.8.1 Spray Test (When Required)

The equipment shall be subjected to the test conditions as specified in RTCA/DO-160B, paragraph 11.4.1, and the following requirements of this standard shall apply:

a. At the end of the 24-hour exposure period, the equipment shall operate at a level of performance which indicates that significant failures of components or circuitry have not occurred.

b. Following the two-hour operational period at ambient temperature, after the 160-hour exposure period at elevated temperature, the following requirements of this standard shall be met:

(1) Paragraph 2.2.1 a. - Bearing Accuracy
(2) Paragraph 2.2.6 - Warnings
(3) Paragraph 2.2.18 - Antenna VSWR

2.3.8.2 Immersion Test (When Required)

The equipment shall be subjected to the test conditions as specified in RTCA/DO-160B, paragraph 11.4.2, and the following requirements of this standard shall apply:

a. At the end of the 24-hour immersion period, the equipment shall operate at a level of performance which indicates that significant failures of components or circuitry have not occurred.

b. Following the two-hour operational period at ambient temperature, after the 160-hour exposure period at elevated temperature, the following requirements of this standard shall be met:

(1) Paragraph 2.2.1 a. - Bearing Accuracy
(2) Paragraph 2.2.6 - Warnings
(3) Paragraph 2.2.18 - Antenna VSWR

2.3.9 Sand and Dust Test (DO-160B, Section 12.0) (When Required)

The equipment shall be subjected to the test conditions as specified in RTCA/DO-160B, Section 12.0, and the following requirements of this standard shall be met:

a. Paragraph 2.2.1 a. - Bearing Accuracy
b. Paragraph 2.2.6 - Warnings
c. Paragraph 2.2.18 - Antenna VSWR

2.3.10 Fungus Resistance Test (DO-160B, Section 13.0) (When Required)

The equipment shall be subjected to the test conditions as specified in RTCA/DO-160B, Section 13.0, and the following requirements of this standard shall be met:

a. Paragraph 2.2.1 a. - Bearing Accuracy
b. Paragraph 2.2.6 - Warnings
c. Paragraph 2.2.18 - Antenna VSWR

2.3.11 Salt Spray Test (DO-160B, Section 14.0) (When Required)

The equipment shall be subjected to the test conditions as specified in RTCA/DO-160B, Section 14.0, and the following requirements of this standard shall be met:

a. Paragraph 2.2.1 a. - Bearing Accuracy
b. Paragraph 2.2.6 - Warnings
c. Paragraph 2.2.18 - Antenna VSWR

2.3.12 Magnetic Effect Test (DO-160B, Section 15.0)

The equipment shall be subjected to the test conditions as specified in RTCA/DO-160B, Section 15.0, and the equipment shall meet the requirements of the appropriate instrument or equipment class specified therein.

2.3.13 Power Input Tests (DO-160B, Section 16.0)

2.3.13.1 Normal Operating Conditions

The equipment shall be subjected to the test conditions as specified in RTCA/DO-160B, paragraphs 16.5.1 and 16.5.2, as appropriate, and the following requirements of this standard shall be met:

a. Paragraph 2.2.1 a. - Bearing Accuracy
b. Paragraph 2.2.6- Warnings
c. Paragraph 2.2.18 - Antenna VSWR

2.3.13.2 Abnormal Operating Conditions

The equipment shall be subjected to the test conditions as specified in RTCA/DO-160B, paragraphs 16.5.3 and 16.5.4, as appropriate, and the following requirements of this standard shall be met:

a. Paragraph 2.2.1 a. - Bearing Accuracy
b. Paragraph 2.2.6 - Warnings
c. Paragraph 2.2.18 - Antenna VSWR

2.3.14 Voltage Spike Conducted Test (DO-160B, Section 17.0)

The following subparagraphs contain the applicable test conditions specified in Section 17.0 of DO-160B.

2.3.14.1 Voltage Spike Category A Requirements (If Applicable)

The equipment shall be subjected to the test conditions as specified in RTCA/DO-160B, paragraph 17.3, and the following requirements of this standard shall be met:

a. Paragraph 2.2.1 a. - Bearing Accuracy
b. Paragraph 2.2.6 - Warnings
c. Paragraph 2.2.18 - Antenna VSWR

2.3.14.2 Voltage Spike Category B Requirements (If Applicable)

The equipment shall be subjected to the test conditions as specified in RTCA/DO-160B, paragraphs 17.4.1, "Intermittent Transients" and 17.4.2, "Repetitive Transients," and the following requirements of this standard shall be met:

a. Paragraph 2.2.1 a. - Bearing Accuracy
b. Paragraph 2.2.6 - Warnings
c. Paragraph 2.2.18 - Antenna VSWR

2.3.15 Audio Frequency Conducted Susceptibility Test (DO-160B, Section 18.0)

The equipment shall be subjected to the test conditions as specified in RTCA/DO-160B, Section 18.0, and the following requirements of this standard shall be met:

a. Paragraph 2.2.1 a. - Bearing Accuracy
b. Paragraph 2.2.6 - Warnings
c. Paragraph 2.2.18 - Antenna VSWR

2.3.16 Induced Signal Susceptibility Test (DO-160B, Section 19.0)

The equipment shall be subjected to the test conditions as specified in RTCA/DO-160B, Section 19.0, and the following requirements of this standard shall be met:

a. Paragraph 2.2.1 a. - Bearing Accuracy
b. Paragraph 2.2.6 - Warnings
c. Paragraph 2.2.18 - Antenna VSWR

2.3.17 Radio Frequency Susceptibility Test (Radiated & Conducted) (DO-160B, Section 20.0)

The equipment shall be subjected to the test conditions as specified in RTCA/DO-160B, Section 20.0, and the following requirements of this standard shall be met:

a. Paragraph 2.2.1 a. - Bearing Accuracy
b. Paragraph 2.2.6 - Warnings
c. Paragraph 2.2.18 - Antenna VSWR

2.3.18 Emission of Radio Frequency Energy Test (DO-160B, Section 21.0)

This environmental condition is also covered in paragraphs 2.2.14 and 2.4.3.14.

Test the equipment in accordance with the procedures contained in RTCA/DO-160B, Section 21.0.

2.4 Equipment Test Procedures

2.4.1 Definitions of Terms and Conditions of Test

The following definitions of terms and conditions of test are applicable to the following equipment tests:

a. Power Input Voltage - Direct Current - Unless otherwise specified, when the equipment is designed for operation from a direct current power source, all measurements shall be conducted with the input voltage adjusted to 13.75 V ±2% for 12-14 V equipment, or to 27.5 V ±2% for 24-28 V equipment. The input voltage shall be measured at the receiver power input terminals.

b. Power Input Voltage - Alternating Current - Unless otherwise specified, when the equipment is designed for operation from an alternating current power source, all tests shall be conducted with the power input voltage adjusted to design voltage ±2%. In the case of equipment designed for operation from a power source of essentially constant frequency (e.g., 400 Hz), the input frequency shall be adjusted to design frequency ±2%. In the case of equipment designed for operation from a power source of variable frequency (e.g., 350 to 1,000 Hz) tests shall be conducted with the input frequency adjusted to within 5% of a selected frequency within the range for which the equipment is designed.

c. Adjustment of Equipment - The circuits of the equipment under test shall be properly aligned and otherwise adjusted in accordance with the manufacturer's recommended practices prior to application of the specified tests.

d. Test Instrument Precautions - Due precautions shall be taken during the tests to prevent the introduction of errors resulting from the improper connection of headphones, voltmeters, oscilloscopes and other test instruments across the input and output impedances of the equipment under test.

e. Ambient Conditions - Unless otherwise specified, all tests shall be conducted under conditions of ambient room temperature, pressure and humidity. However, the room temperature shall not be lower than 10 degrees Centigrade.

f. Connected Loads - Unless otherwise specified, all tests shall be performed with the equipment connected to loads having the impedance values for which it is designed.

g. RF Signal Levels - All RF signal levels are expressed in dBm on a 50 ohm basis (see Appendix C).

NOTE: In the case of a receiver designed for a transmission line having a nominal characteristic impedance other than 50 ohms, the

RF voltage shall produce the same power into the nominal characteristic impedance.

h. Standard Test Signals - Unless otherwise specified, the RF input signals shall be at a level of -53 dBm and have a frequency within .001% of the assigned carrier frequency in addition to the following characteristics:

(1) Standard VOR Test Signal - An RF carrier, amplitude modulated simultaneously (a) 30 ±1% by a "reference phase signal," composed of a 9,960 Hz subcarrier, which is, in turn, frequency modulated at a deviation ratio of 16 by a 30 ±0.1% Hz signal, and (b) 30 ±1% by a 30 ±0.1% Hz "variable phase signal" which can be varied in phase with respect to the 30 Hz FM of the reference phase signal.

(2) Standard VOR Audio Test Signal - A standard VOR test signal to which is added a 1,000 Hz signal amplitude modulating the carrier 30%.

(3) Standard Audio Test Signal - An RF carrier amplitude modulated 30% at 1,000 Hz.

i. Undesired Test Signal

(1) The standard undesired VOR test signal shall consist of a standard VOR test signal in which the 30 Hz and 9,960 Hz signals are offset in frequency by 1% from the standard VOR test signal.

(2) The standard localizer centering signal is an RF carrier amplitude modulated simultaneously with 90 ±0.3% and 150 ±0.3% Hz signals so that the sum of their separate modulation percentages equals 40 ±2% and the difference in depth of modulation of the 90 and 150 Hz signals is less than 0.002 (0.1 dB).

j. Standard Deviation Signal - A standard VOR test signal at a level of -53 dBm offset 10 ±0.3 degrees from that which produces an on-course indication.

k. Standard Centering Signal - A standard VOR test signal in which the difference in phase between the reference and variable phase signals is equal (±0.3 degree) to the setting of the equipment's course selector.

l. Receiver Sensitivity - The receiver sensitivity is the minimum level in dBm of a standard VOR test signal required to produce simultaneously (1) a deflection of the deviation indicator of at least 50% of standard deflection, and (2) erratic movement of the deviation indicator due to noise of not more than ±5% of standard deflection.

m. Non-applicability of Conditions of Test - In those cases in which it can be shown that the conditions of test set forth above are not applicable to a particular receiver, the conditions of test may be modified as required by the design of the receiver.

n. Adjacent Channel Signals -

(1) The first adjacent channel VOR signals are separated from the desired signal frequency (fo) by:

a. + 50 kHz minus 0.002% of (fo + 50 kHz).
b. - 50 kHz plus 0.002 % of (fo - 50 kHz).

(2) The second adjacent channel VOR signals are separated from the desired signal frequency (fo) by:

a. + 100 kHz minus 0.002% of (fo + 100 kHz).
b. - 100 kHz plus 0.002 % of (fo - 100 kHz).

(3) The first adjacent localizer signals are separated from the desired signal frequency (fo) by:

a. + 50 kHz minus 7 kHz minus 0.002% of (fo + 50 kHz).
b. - 50 kHz plus 7 kHz plus 0.002 % of (fo - 50 kHz).

(4) The second adjacent channel localizer signals are separated from the desired signal frequency (fo) by:

a. + 100 kHz minus 7 kHz minus 0.002% of (fo + 100 kHz).
b. - 100 kHz plus 7 kHz plus 0.002 % of (fo - 100 kHz).

2.4.2 Description of Test Equipment

a. NAV Signal Generator

The NAV signal generator shall be capable of generating the standard test signals described in paragraph 2.4.1 and shall have the following additional capabilities:

(1) Shall tune to all 50 kHz channels from 108.00 to 117.95 MHz with a carrier frequency accuracy of 0.001%.

(2) Shall have an output level adjustable from -118 dBm to -7 dBm.

(3) Shall be able to vary reference phase modulation from 25% to 35% and variable phase modulation from 25% to 35%.

(4) Shall be able to provide the standard localizer centering signal in lieu of the standard VOR test signal.

(5) Shall have 360 degrees adjustable bearing in one-degree steps.

(6) Shall have all modulation frequencies (as a group) adjustable +1% and -1% from the standard values.

(7) Shall be able to vary output frequency from standard channel frequencies up to 0.01%.

(8) Shall be able to vary 9,960 Hz deviation ratio from 8 to 17.

Typical NAV generators which provide the above capabilities:

IFR NAV 750
Tel-Instrument T-60A.
Collins 479S-6

b. Power Divider

A three-branch "T" pad allowing mixing of two 50 ohm sources to a 50 ohm load without impedance mismatching.

Representative:

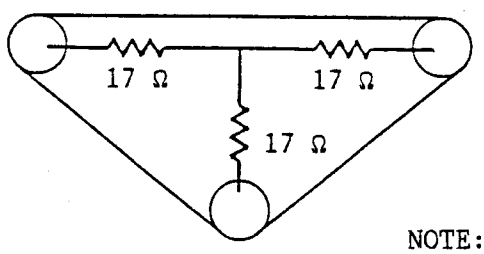

NOTE: insertion loss = 6 dB

c. LF Sine Wave Function Generator

(1) Frequency range 1 Hz to 4,000 Hz.
(2) Output voltage up to 3V peak to peak into 50 ohms.
(3) Distortion less than 2%.

2.4.3 Detailed Test Procedures

The following test procedures are considered satisfactory in determining required performance. Although specific test procedures are cited, it is recognized that other methods may be preferred. These alternate procedures may be used if the manufacturer can show that they provide at least equivalent information. Therefore, the procedures cited herein should be used as one criterion in evaluating the acceptability of the alternate procedures.

2.4.3.1 Bearing Accuracy (paragraph 2.2.1)

Equipment Required

NAV signal generator.
Power source providing DC or AC power having a frequency range covering that for which the receiver is designed.

Measurement Procedures[1]

a. Apply to the receiver input a standard VOR test signal. Determine, at each 30-degree incremental setting of the omni-bearing selector (or at 30-degree increments in course angle for equipments not employing an omni-bearing selector) throughout 360 degrees, the maximum algebraic difference in degrees between the setting of the NAV signal generator bearing dial and the course indicated by the VOR receiver. In the case of receivers which include a "TO" and "FROM" indication, both indicated bearings shall be determined. During this test:

(1) The frequency of the reference and variable phase signals shall be held to 30 Hz ±0.1%.

(2) The primary power voltage at the input terminals of the equipment shall be held to within 2% of the nominal design voltage.

(3) The percentage modulation of the carrier by the variable phase signal and the 9,960 Hz subcarrier each shall be held between the limits of 29 and 31%.

(4) The ambient air temperature surrounding the equipment shall be between 20 and 30 degrees Centigrade.

(5) The carrier frequency of the test signal shall be within .001% of the assigned channel frequency.

(6) The power supply frequency (AC source only) shall be 400 Hz ±2%, or within 5% of any other nominal power supply frequency for which equipment is designed.

(7) Interfering signals shall not be present.

---

[1]It is not required that equipment be subjected to all combinations of the above variable conditions simultaneously to determine compliance with this standard. Appendix B, "Statistical Procedure for the Determination of VOR Bearing Accuracy" sets forth a satisfactory method for determining the accuracy characteristics of Airborne VOR Receiving Equipment. Alternate procedures which provide equivalent information may be used.

(8) RF input voltage is -53 dBm.

b. Repeat the above procedure but with the following special conditions:

(1) At each measurement bearing, vary the frequency of the reference and variable phase signals between the limits of ±1.0% of 30 Hz and determine the maximum algebraic difference in indicated bearing caused by the frequency variation for both positive and negative displacements.

(2) At each measurement bearing, vary the primary power voltage at the input terminals of the equipment between the limits of ±10% of the nominal design voltage and determine the maximum algebraic difference in indicated bearing caused by the input voltage variation for both positive and negative displacements.

(3) At each measurement bearing, vary the percentage of modulation of the carrier by the variable phase signal and the 9,960 Hz subcarrier between the limits of 25 and 35% and determine the maximum algebraic difference in indicated bearing caused by the percentage of modulation variation for both positive and negative displacements.

(4) At each measurement bearing, vary the ambient air temperature between the operating temperature limits of the temperature-altitude category for which the equipment is designed and determine the maximum algebraic difference in indicated bearing caused by the temperature variation for both high and low temperature excursions.

(5) At each measurement bearing, vary the carrier frequency of the test signal between limits of ±.002% of the assigned channel frequency and determine the maximum algebraic difference in indicated bearing caused by the carrier frequency variation for both positive and negative displacements.

(6) At each measurement bearing, vary the power supply frequency (AC source only) between the design limits of the equipment and determine the maximum algebraic difference in indicated bearing caused by the power supply frequency variation for both positive and negative displacements.

(7) At each measurement bearing, vary the RF signal level between -93 dBm and -27 dBm and determine the maximum algebraic difference in indicated bearing caused by the RF level variations for both positive and negative displacements.

(8) At each measurement bearing, vary the deviation ratio of the 9,960 Hz subcarrier from 8 through 17 (±240 to ±510 Hz peak) and determine the maximum algebraic difference in the indicated bearing.

NOTE: During all of the tests, ensure that warning flag always remains out of view.

2.4.3.2 Interfering Signals (paragraph 2.2.2)

a. Adjacent Channel Signals

Equipment Required

2 NAV signal generators.
Power divider.
Harmonic generator (see Appendix A).

Measurement Procedure

(1) Apply to one input of the power divider a standard test signal (desired) at a level of -87 dBm at the frequency to which the receiver is tuned. Apply to the other input of the power divider an undesired VOR test signal at the first adjacent channel. Vary the undesired signal from -107 to -53 dBm. Determine the positive and negative bearing errors caused by the undesired test signal.

(2) Apply to one input of the power divider a standard VOR test signal (desired) which is varied from -87 to -47 dBm at the frequency to which the receiver is tuned. Apply to the other input of the power divider an undesired VOR test signal that is varied from -107 dBm to -27 dBm at each second adjacent channel, in turn. Set the desired signal generator level to -87 dBm and vary the undesired signal generator level from -107 dBm to -41 dBm. Increase the desired signal generator level to -47 dBm, simultaneously maintaining the undesired signal generator level 46 dB above the desired signal generator level or at -27 dBm, whichever is the lower. Determine the positive and negative bearing errors caused by the second adjacent channel signals.

(3) Apply tests (1) and (2) above using a standard localizer centering signal as the undesired signal in lieu of the undesired VOR test signal.

b. Cross Modulation (paragraph 2.2.2.2)

Equipment Required

2 NAV signal generators.
Power divider.

Measurement Procedure

Apply to one input of the power divider a standard VOR test signal (desired) which is varied from -77 dBm to -27 dBm at the frequency to which the receiver is tuned. Apply to the other input of the power divider an undesired VOR test signal at a level of -27 dBm at and beyond the third adjacent channel frequencies. Determine the positive and negative bearing errors caused by cross-modulation.

c. Intermodulation (paragraph 2.2.2.3)

Equipment Required

1 NAV generator.
2 CW generators (HP 8640 or equivalent).
2 combiners (mini-circuits Model ZFSC-2-1).
1 pink noise or CCIR colored noise generator.
1 filter (bandpass or low pass as required).
3 6 dB attenuators.
1 microvoltmeter, spectrum analyzer, or other carrier power measuring device.
2 linear amplifiers.

Measurement Procedure

To one input of the combining unit apply a standard VOR audio test signal. To the other input apply a modulated RF carrier at the level and frequencies specified. Determine the change in VOR bearing, audio output level, and condition of the warning due to the addition of the modulated RF carrier.

(1) Connect the receiver to the antenna transmission line as described in Figure 2-2.

(2) Apply to the receiver a standard VOR test signal at -79 dBm tuned to 108.0 MHz and 2 RF generators at signal levels specified in Figure 2-1. Frequency modulate N_1 with a pink noise source or CCIR colored noise source for a peak frequency deviation of + and - 75 kHz.

The test shall be performed at the following discrete frequencies:

N_1	N_2
107.7 MHz	107.4 MHz
103.0 MHz	98.0 MHz
98.0 MHz	88.0 MHz

(3) Determine whether the equipment meets the requirements of paragraph 2.2.2.3 up to when $N_1 = N_2$.

(4) Determine that a warning flag occurs under the following conditions:

(a) When either of the two components are removed from the VOR test generator.

(b) When the desired RF signal is removed.

NOTE: All levels are referenced to a 50 ohm input as shown in Figure 2-2.

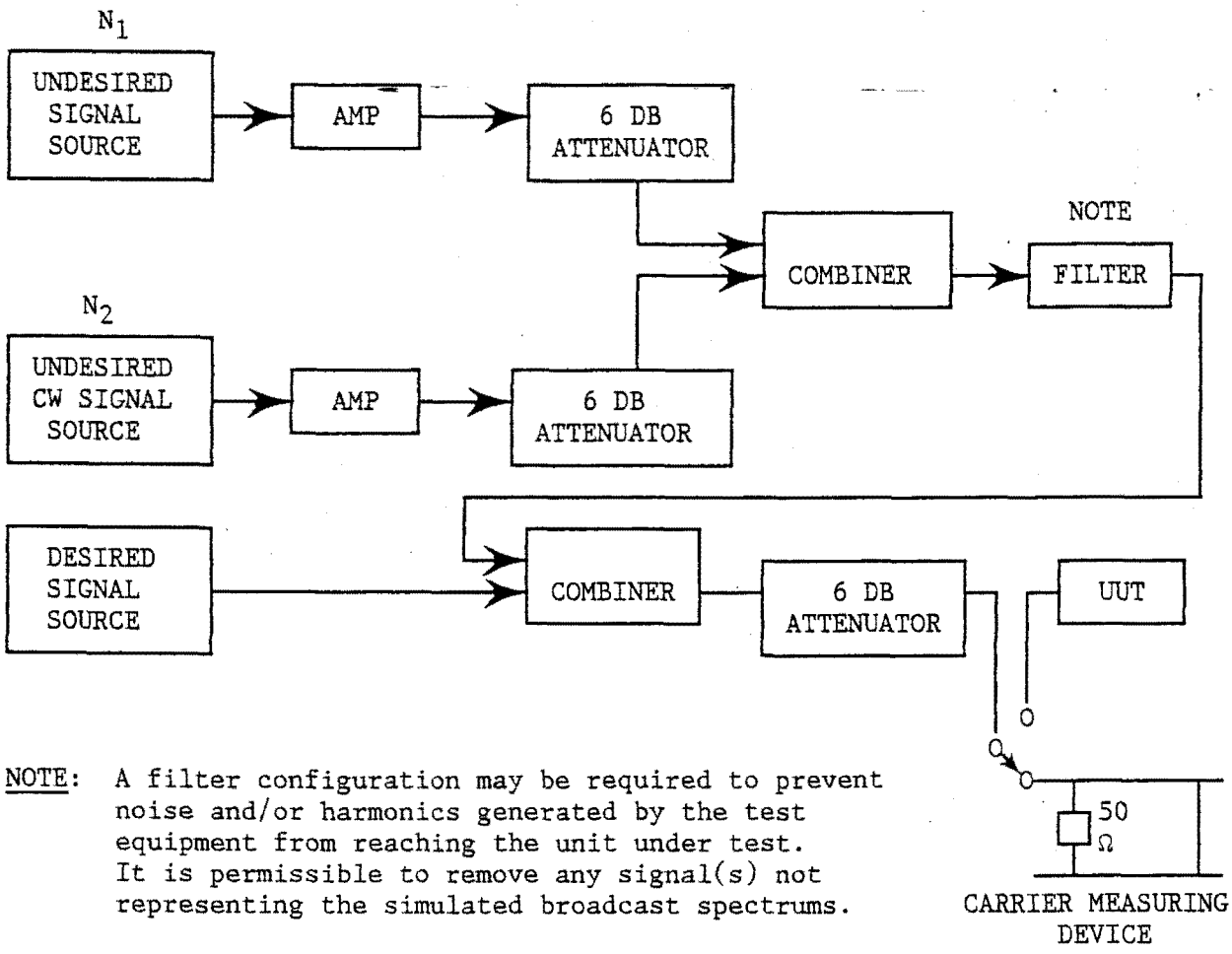

NOTE: A filter configuration may be required to prevent noise and/or harmonics generated by the test equipment from reaching the unit under test. It is permissible to remove any signal(s) not representing the simulated broadcast spectrums.

FIGURE 2-2 INTERMODULATION TEST SETUP

d. Multipath Interference (Clarksburg Effect) (paragraph 2.2.2.4)

Equipment Required

NAV signal generator.
Diode modulator.
Low frequency sine wave function generator.
6 dB pad.
Spectrum analyzer covering NAV band.
1.5V DC voltage source.
39 ohm resistor.
2 K ohm potentiometer.

NOTE: A low-frequency oscillator with either no DC at the output or a monitored and adjustable level of DC should be used.

Measurement Procedure

(1) Connect the NAV signal generator to the spectrum analyzer (using logarithmic mode, 1 or 2 dB/div) and note the deflection for a generator output of -73 dBm CW. In linear mode, note the deflection caused by 10% modulation of the signal generator at 30 Hz.

(2) Connect the low-frequency sine wave function generator (set at zero output), the diode modulator, NAV signal generator, DC voltage source resistor, and potentiometer as shown in Figure 2-3. Set the NAV signal generator output to -61 dBm CW, and connect the output of the diode modulator to the spectrum analyzer input (logarithmic mode, 1-2 dB/div). Adjust the DC bias current via the potentiometer for a 12 dB loss in the modulator (-73 dBm to the spectrum analyzer as determined in step (1)).

(3) Set the low-frequency sine wave function generator to 30 Hz. With the spectrum analyzer in the linear mode, adjust the 30 Hz level to 10% modulation, as determined in step (1).

(4) Adjust the NAV signal generator for a standard VOR test signal and connect the output of the diode modulator through a 6 dB attenuator to the receiver under test. With the low frequency sine wave function generator output momentarily set to 0, adjust the signal generator phase angle selector for 0 deflection of the deviation indicator for reference.

(5) Reset the function generator at the level determined in step (3) and change the frequency to 5 Hz. Measure and record the bearing error caused by the additional AM modulation defined by this test.

(6) Repeat Step (5) for 1, 2, 3, 4, 6, 7, 8, 12, 18, 19, 20, 21, 22, 23, 24, 25, 35, 40, 45, 50, 55, 65, 70, 75, 80, 85, 95 and 100 Hz.

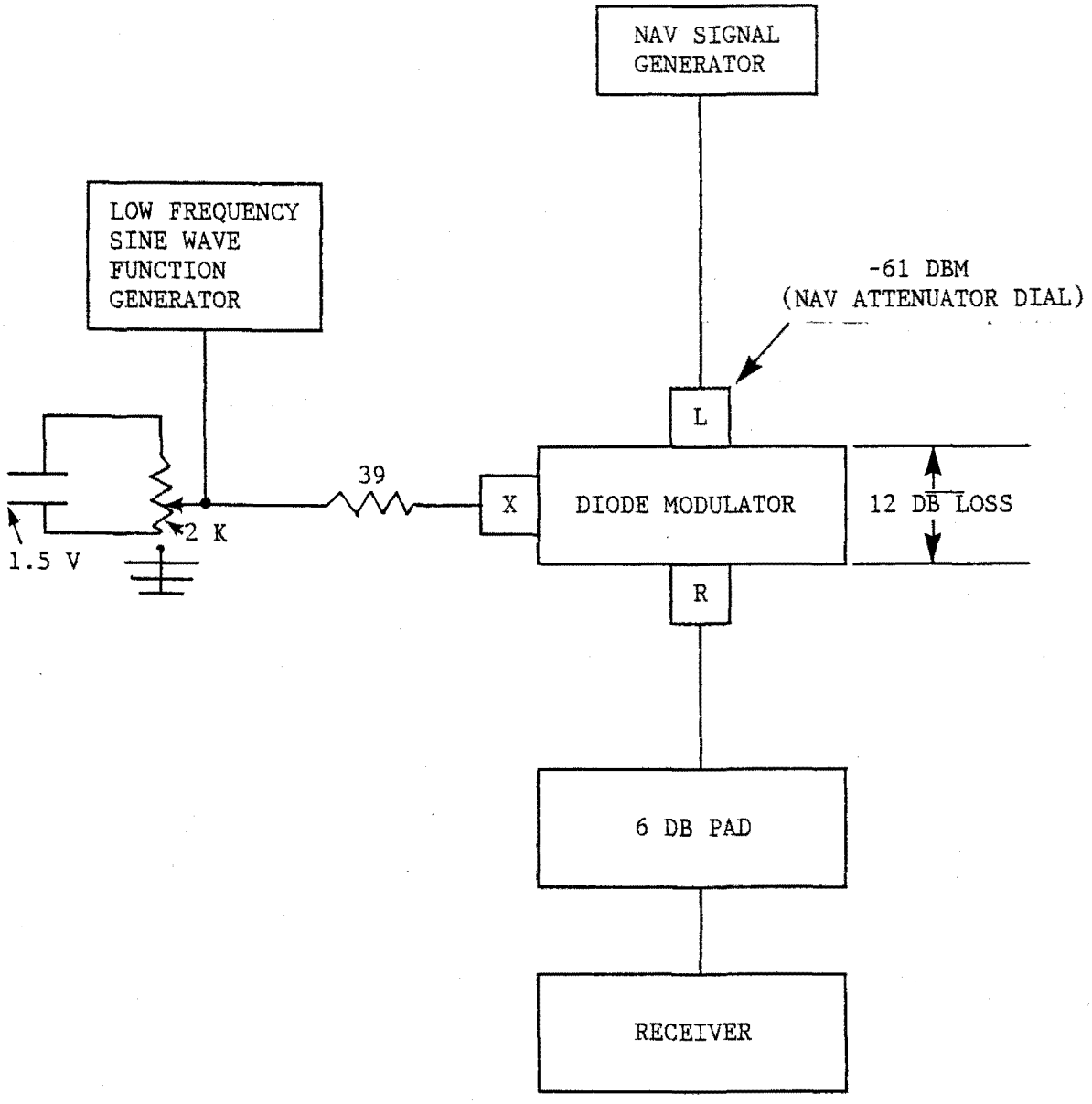
NAV SIGNAL GENERATOR
LOW FREQUENCY SINE WAVE FUNCTION GENERATOR
-61 DBM
(NAV ATTENUATOR DIAL)
L
39
X
DIODE MODULATOR
12 DB LOSS
2 K
1.5 V
R
6 DB PAD
RECEIVER

FIGURE 2-3

e. Speech and Identification Components (paragraph 2.2.2.5)

Equipment Required

NAV signal generator.
Low frequency sine wave function generator (if NAV signal generator does not have variable frequency tone modulation).

Measurement Procedure

(1) Set the NAV signal generator to produce a standard VOR audio test signal at a level of -53 dBm.

(2) Slowly vary the audio tone from 350 to 2,500 Hz, and record any bearing error.

f. Doppler VOR Signal (paragraph 2.2.2.6)

Equipment Required

NAV signal generator.
Low frequency sine wave function generator.
Oscilloscope.
AC voltmeter.
DC voltmeter.
AM modulator and signal mixer (Figure 2-4).

Measurement Procedure

(1) Set up the equipment as shown in Figure 2-4. Set the NAV OUTPUT of the NAV signal generator to -53 dBm.

(2) With the three input signals removed (30 Hz VAR, 9,960 Hz, and MOD INPUT), adjust the % MOD CONTROL for -5.7 VDC at the DC TEST POINT.

(3) Connect the low frequency sine wave function generator to the MOD INPUT of the modulator (9,960 and 30 Hz VAR still not connected).

(a) Adjust the low frequency sine wave function generator for 30 Hz and 1.5 VAC at the modulator MOD INPUT.

(b) Adjust the 9,960 Hz OFFSET control for a null indication on the oscilloscope.

(4) Remove the MOD INPUT connection and connect the 9,960 Hz to the modulator (MOD INPUT and 30 Hz VAR inputs not connected).

(a) Adjust the reference phase level for 1.5 VAC at the 9,960 Hz input.

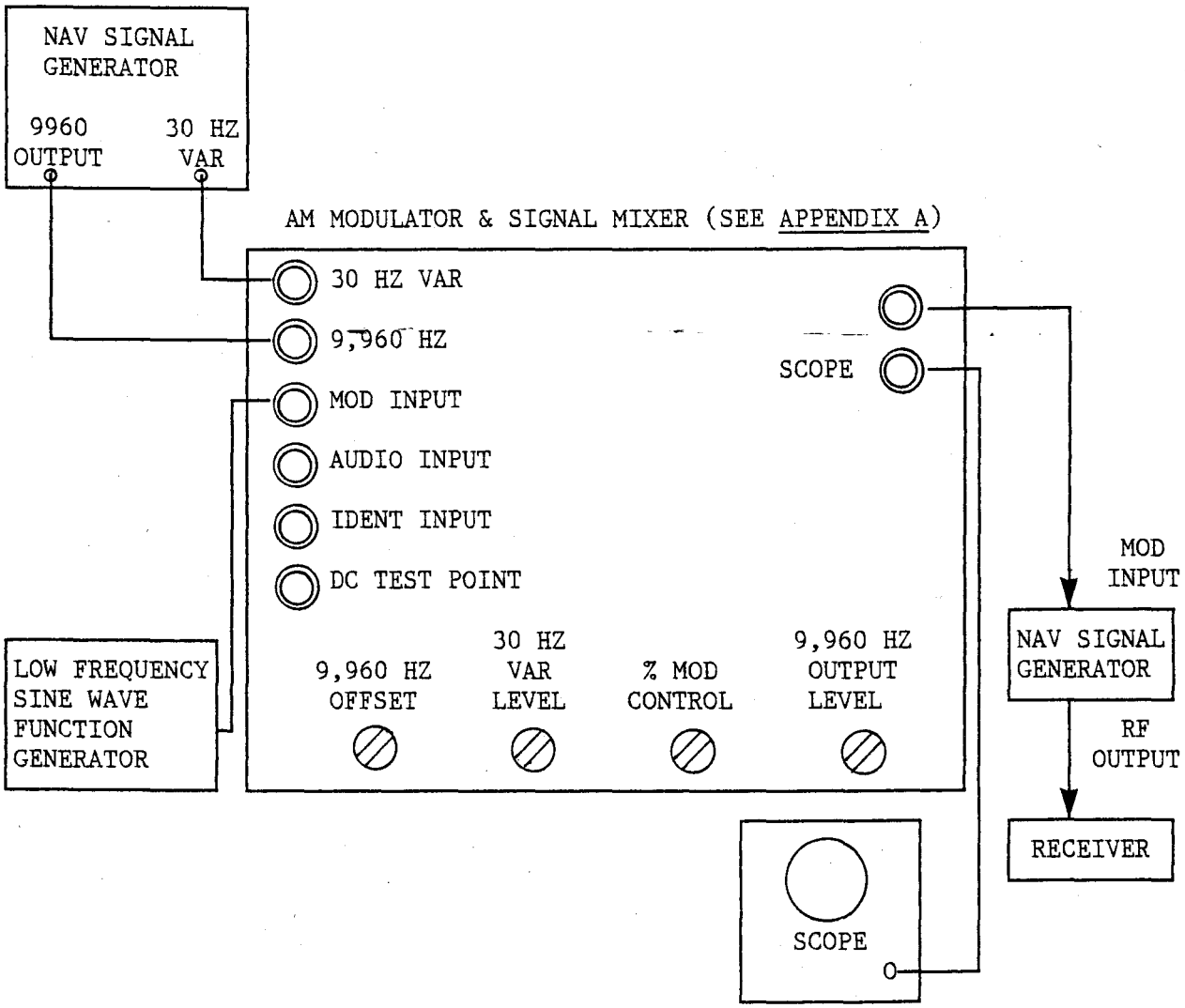
NAV SIGNAL GENERATOR
9960 OUTPUT
30 HZ VAR
AM MODULATOR & SIGNAL MIXER (SEE APPENDIX A)
30 HZ VAR
9,960 HZ
MOD INPUT
AUDIO INPUT
IDENT INPUT
DC TEST POINT
SCOPE
9,960 HZ OFFSET
30 HZ VAR LEVEL
% MOD CONTROL
9,960 HZ OUTPUT LEVEL
LOW FREQUENCY SINE WAVE FUNCTION GENERATOR
MOD INPUT
NAV SIGNAL GENERATOR
RF OUTPUT
RECEIVER
SCOPE

FIGURE 2-4

(b) Adjust the 9,960 Hz OUTPUT LEVEL on the modulator for 1.5 VAC at the SCOPE terminal.

(c) Adjust the MOD LEVEL control on the RF signal generator for 30% modulation.

(5) Connect the 9,960 Hz and MOD INPUT to the modulator (30 Hz VAR removed). Verify 40% modulation by MOD INPUT voltage to the 9,960 Hz signal on the oscilloscope.

NOTE: $\%MOD \quad \frac{\text{MAX envelope height - MIN envelope height}}{\text{MAX envelope height + MIN envelope height}}$

(6) Connect the 30 Hz VAR to the modulator (9,960 Hz) and MOD INPUT removed). Adjust the 30 Hz VAR LEVEL control on the modulator for 1.5 VAC at the SCOPE terminal.

(7) Connect the 30 Hz VAR and 9,960 Hz to the modulator (MOD INPUT removed).

(8) Connect all three inputs (30 Hz VAR, 9,960 Hz and MOD INPUT) to the modulator. Remove the oscilloscope from the SCOPE terminal and connect it to the output of the low frequency sine wave function generator.

(9) Synchronize the oscilloscope to the 60 Hz line. Fine tune the low frequency sine wave function generator such that the nearly synchronized 30 Hz wave form on the oscilloscope has a beat rate less than 1 cycle per 30 seconds.

(10) Determine the maximum bearing error resulting from this test.

(11) Change the frequency of the low frequency sine wave function generator to 60 Hz and readjust the level if necessary for 1.5 VAC at the MOD INPUT terminal.

(12) Again, fine tune the low frequency sine wave function generator such that the nearly synchronized 60 Hz wave form has a beat rate less than 1 cycle per 30 seconds.

(13) Determine the maximum bearing error resulting from this test.

(14) Change the frequency of the low frequency sine wave function generator to 1,500 Hz and readjust the level if necessary for 1.5 VAC at the MOD INPUT terminal.

(15) Again, fine tune the low frequency sine wave function generator such that the nearly synchronized 1,500 Hz wave form has a beat rate less than 1 cycle per 30 seconds.

(16) Determine the maximum bearing error resulting from this test.

2.4.3.3 Course Deviation Indication (paragraph 2.2.3)

Equipment Required

NAV signal generator.

Measurement Procedure

a. Deflection Sensitivity

To the receiver input, apply a -73 dBm standard VOR test signal. Shift the bearing dial of the signal generator 10 degrees from the selected radial that produced the on-course indication. Measure the amount of visible deflection of the course deviation in- dicator. Repeat the test as necessary to determine the amount of visible deflection produced by a 10-degree bearing shift at signal input levels covering the range -93 to -27 dBm.

b. Deflection Linearity

To the receiver input, apply a -73 dBm standard VOR test signal. Set the bearing dial of the signal generator to produce an on-course indication. Reset the bearing dial in 2-degree increments up to a total of +10 degrees. Measure the deviation indicator deflection increments. Increase the bearing dial change to +80 degrees and determine whether the deviation indicator deflection decreases for any bearing increase throughout this range of bearings.

2.4.3.4 Ambiguity Indication (TO-FROM) (paragraph 2.2.4)

Equipment Required

NAV signal generator.

Measurement Procedure

Apply a standard centering signal to the receiver. Change the centering signal to all bearings up to +75 degrees and determine that a clear and appropriate "TO" or "FROM" indication is displayed. This requirement shall be met at all RF signal levels specified.

2.4.3.5 Non-Manual VOR Bearing Indication (paragraph 2.2.5)

Equipment Required

NAV signal generator.

Measurement Procedure

a. To the receiver input apply a -53 dBm standard VOR test signal at the selected channel frequency, and a bearing of 180 degrees. Check that the indicator sends the bearing ±2.5 degrees.

b. Repeat the above procedure for each 30-degree bearing.

2.4.3.6 Warnings (paragraph 2.2.6)

Equipment Required

NAV signal generator.

Measurement Procedure

To the receiver input apply a standard VOR test signal at center response frequency and having a level of -73 dBm.

a. Determine the position or response of the warning device under the following conditions:

(1) No RF signal.

(2) When the 9,960 Hz modulation is removed from carrier and the RF input level is varied between -93 and -27 dBm.

(3) When either one of the two 30 Hz modulations on an otherwise standard VOR test signal is removed and the RF input level is varied between -93 and -27 dBm.

b. When the receiver input signal level is reduced to the point where the deflection sensitivity to a 10-degree bearing range is half of that obtained with a -73 dBm input signal.

c. When the level of the standard VOR test signal is changed to cover the range of -93 to -27 dBm or the 9,960 Hz subcarrier deviation ratio is varied from 8 to 17 (±240 to ±510 Hz peak).

2.4.3.7 Spurious Response (paragraph 2.2.7)

Equipment Required

3 Nav signal generators.
Voltmeter.

Measurement Procedures

To the receiver input apply a -93 dBm standard audio test signal on the selected frequency. Record the audio or detector carrier (AGC) output level as reference. Change the RF frequency and level to those specified and determine that the audio or detector carrier (AGC) output never exceeds the reference level.

2.4.3.8 Desensitization (paragraph 2.2.8)

Equipment Required

1 NAV generator.
1 CW signal generator (HP 8640B or equivalent).
1 Filter (bandpass or low pass as required).
1 Microvoltmeter.
1 Amplifier.
1 Power divider.

Measurement Procedure

To one input of the power divider apply a standard VOR audio test signal. To the other input apply an RF carrier at the level and frequencies specified. Determine the change in VOR bearing, audio output level, and condition of the warning due to the addition of the unmodulated RF carrier.

a. Connect the UUT tuned to 108.2 MHz.

b. Connect power divider to UUT as physically close as possible.

c. Apply to the power divider a standard VOR signal of -73 dBm and one signal that will produce the levels specified in paragraph 2.2.8 at the receiver input terminals. Set up test equipment as shown in Figure 2-5.

d. Determine whether the UUT meets the requirements of paragraph 2.2.8.

e. Determine that a warning flag occurs under the following conditions:

(1) When either of the two components are removed from the VOR test generator.

(2) When the desired RF signal is removed.

The following discrete frequencies and levels are to be tested.

107.9 MHz/-10 dBm
102.0 MHz/+15 dBm
88.0 MHz/+15 dBm

2.4.3.9 VOICE/IDENT Audio Output Level (paragraph 2.2.9)

Equipment Required

NAV signal generator.
Output power meter.

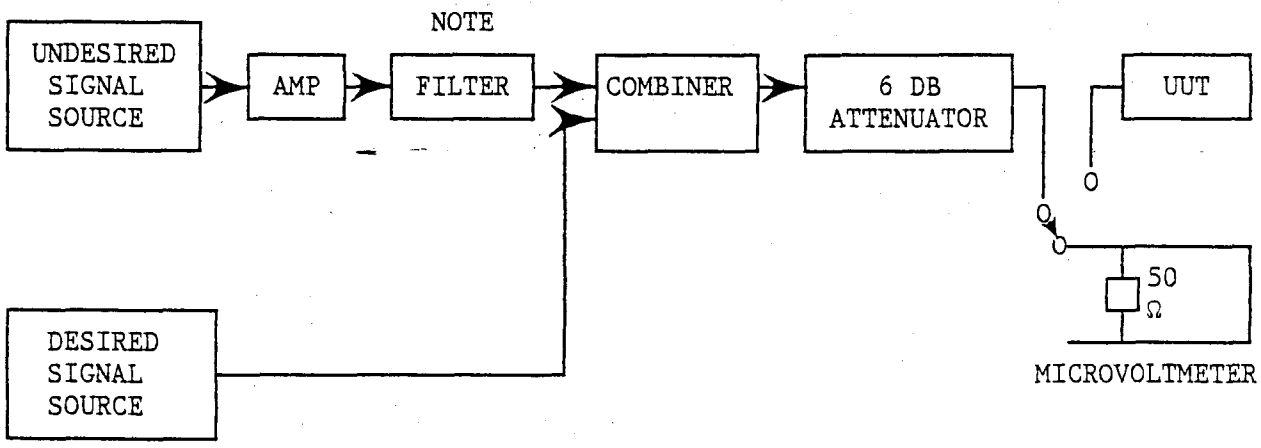

NOTE: A filter configuration may be required to prevent noise and/or harmonics generated by the test equipment from reaching the unit under test. It is permissible to remove any signal(s) not representing the simulated broadcast spectrums.

Figure 2-5 Desensitization Test Setup

Measurement Procedure

To the receiver input apply a standard audio test signal. Determine the RF input level required to produce the manufacturer's published rated output at maximum gain setting, if such a control is provided.

2.4.3.10 VOICE/IDENT Audio Frequency Response (paragraph 2.2.10)

Equipment Required

NAV signal generator.
Low frequency sine wave function generator (if the NAV signal generator does not have variable frequency tone modulation).
Output power meter.

Measurement Procedure

a. Apply to the receiver input a standard VOR audio test signal. Adjust the RF signal level to produce an audio output signal-plus-noise-to-noise ratio of at least 20 dB and the receiver audio gain control (if provided) to produce rated output or greater.

   Change the modulating frequency to cover the range of 350 to 2,500 Hz and determine the difference between maximum and minimum output level.

   Vary the modulating frequency beyond 2,500 Hz and determine that the audio level does not increase.

   Vary the modulating frequency to 150 Hz and below, and 9 kHz and above, and determine that the audio level is at least 20 dB below the output at the frequency of maximum response.

b. If a "VOICE/IDENT" filter is employed in the equipment:

   (1) When the "IDENT" function is selected, the requirements of subparagraph a. above do NOT apply. Determine that a 1,020 Hz keyed identity signal is clearly audible and the existence of voice modulating is evident.

   (2) When the "VOICE" function is selected, the requirements of subparagraph a. do apply except that frequencies near 1,020 Hz may be attenuated. However, the voice intelligibility shall not be significantly impaired due to the attenuation of frequencies near 1,020 Hz.

2.4.3.11 VOICE/IDENT Audio Distortion (paragraph 2.2.11)

Equipment Required

NAV signal generator.
Low frequency sine wave function generator (if the NAV signal generator does not have variable frequency tone modulation).
Distortion and noise meter.

Measurement Procedure

To the receiver input apply a standard VOR audio test signal. Determine the distortion plus noise output at RF input levels between -79 and -27 dBm. This measurement should be made at 10% of rated output and at rated output.

2.4.3.12 VOICE/IDENT Audio Output Noise Level (paragraph 2.2.12)

Equipment Required

NAV signal generator.
Output power meter.

Measurement Procedure

To the receiver input apply a -79 dBm standard VOR audio test signal and adjust the receiver audio gain control, if provided, for rated audio power output. Remove the 1,000 Hz audio tone from the modulation of the input signal and determine the receiver output in dB below the rated audio power output level. Repeat this procedure at a sufficient number of input signal levels to determine the signal-plus-noise-to-noise ratio over the input signal range of -93 to -27 dBm.

2.4.3.13 AGC Characteristic (paragraph 2.2.13)

Equipment Required

NAV signal generator.
Output power meter.

Measurement Procedure

To the receiver apply a standard VOR test signal and adjust the receiver gain control, if provided, for rated audio output at the RF signal input level between -93 and -27 dBm that produces a maximum output. Vary the RF input signal level to cover the range of -93 to -27 dBm and determine the maximum and minimum audio output levels.

2.4.3.14 Emission of Radio Frequency Energy (paragraph 2.2.14)

To be measured using the test setup and procedures defined in Section 21.0 of RTCA/DO-160B.

2.4.3.15 Receiver VSWR (paragraph 2.2.15)

Equipment Required

Impedance bridge.

Measurement Procedure

With the impedance bridge, measure the impedance of the receiver input circuit when it is tuned to 108.2, 113.0 and 117.9 MHz. Compute the VSWR. The level of the input signal shall not overload the receiver input circuit.

2.4.3.16 Antenna Efficiency (paragraph 2.2.16)

Equipment Required

Ground plane.
Standard dipole antenna (1/2" diameter, length adjusted to 113 MHz when testing the narrow band antenna, or 122 MHz when testing the wide band antenna, of aluminum, or equivalent).
NAV signal generator.
Field strength meter.
Matching stubs, or equivalent matching device.
Standard test antenna (6 dB 50 ohm pad).

Measurement Procedure

Refer to Figure 2-6. Mount the standard dipole antenna in a horizontal position at the center of the ground plane. Elevate the dipole 10 inches above the ground plane, using a nonconductive pedestal, such as polystyrene. Match the standard dipole for an SWR of 1.2:1, or less, at the signal generator and transmission line impedance, using the tuning stubs or equivalent device, at a frequency of 113 MHz (narrow band antenna) or 122 MHz (wide band antenna). With the field strength receiving antenna horizontal to the ground, locate it at least 50 feet from the dipole and at the same elevation. Rotate the standard dipole to direct a maximum of radiation toward the field strength receiving antenna. (The axis of both the standard dipole and the field strength antenna should be perpendicular in the horizontal plane to a line connecting the two.) Adjust the input signal level for a satisfactory indication on the field strength meter at the separation distance between the two antennas. Refer to Figure 2-7. Mount the antenna to be tested in the prescribed manner in place of the standard dipole and elevating pedestal. Measure the signal input required to produce the reference field strength at the reference separation and

elevation. Rotate the ground plane with the antenna being tested to determine all minimum and maximum radiation points.

2.4.3.17 Antenna Polarization (paragraph 2.2.17)

Equipment Required

Ground plane.
Signal generator.
Field strength meter.
Standard test antenna.

Measurement Procedure

Refer to Figure 2-6. Mount the antenna to be tested in the prescribed manner at the center of the ground plane. Locate the field strength receiving antenna at least 50 feet from the antenna being tested and at the same elevation. Determine the ratio between the horizontal and vertical components of field strength at 113 MHz and at all azimuth angles which are multiples of 30 degrees.

2.4.3.18 Antenna VSWR (paragraph 2.2.18)

Equipment Required

Impedance bridge.

Measurement Procedure

With the impedance bridge, measure the impedance of the antenna input circuit and compute the VSWR.

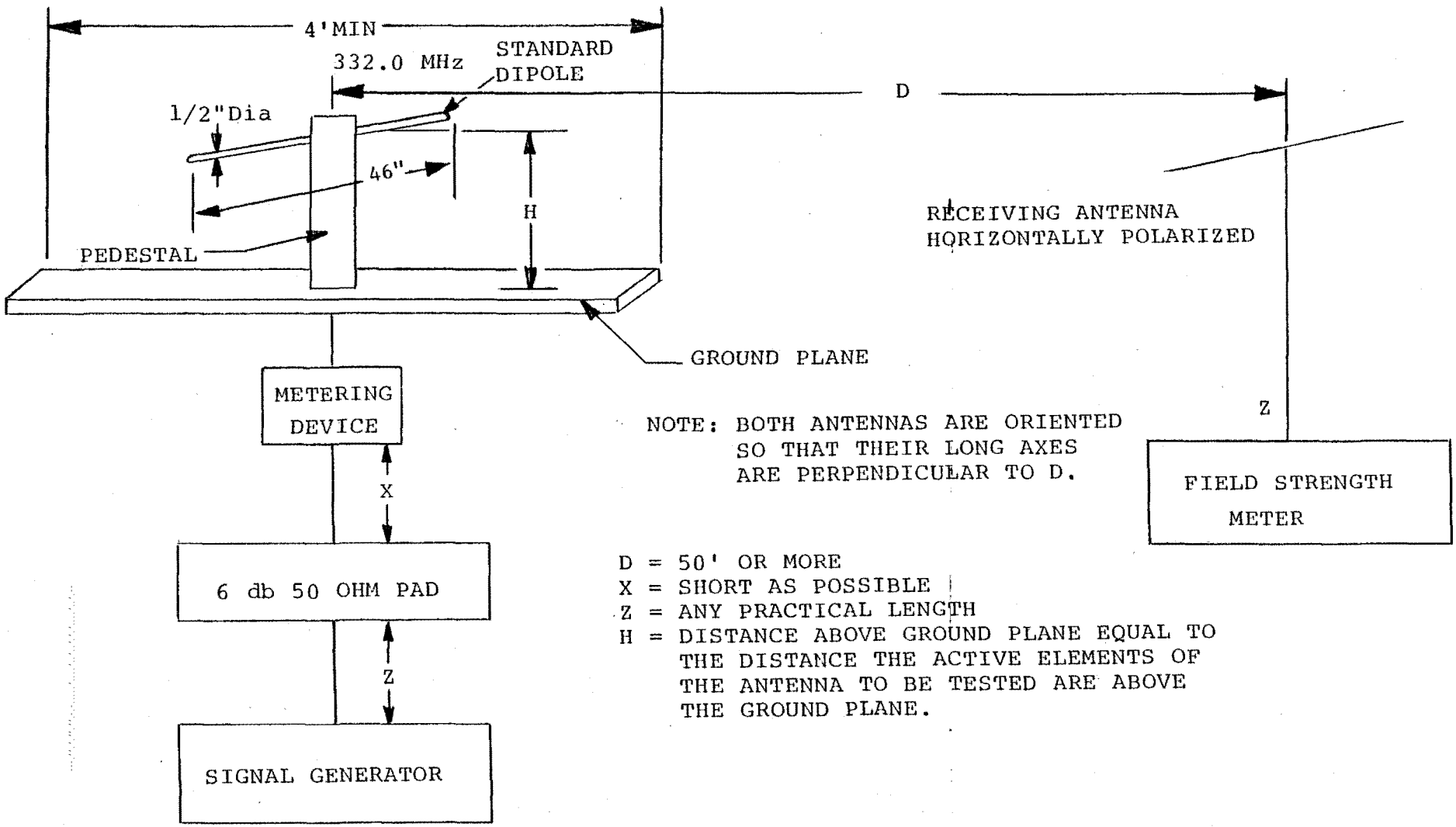

Figure 2-6 - Set-up for Obtaining Antenna Efficiency Level

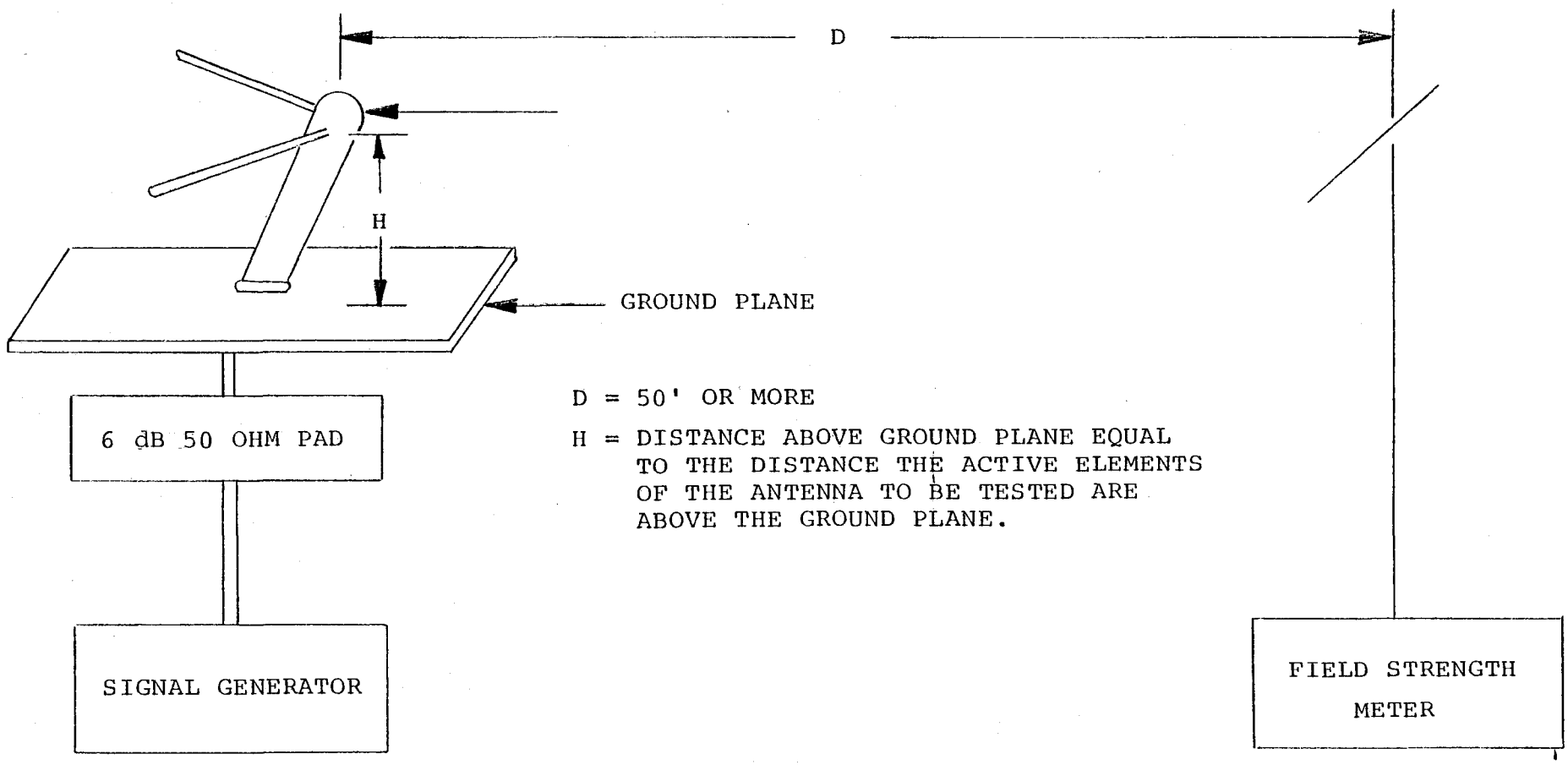

Figure 2-7 - Set-up for Testing Antenna Efficiency and Polarization

3.0 INSTALLED EQUIPMENT PERFORMANCE

3.1 Equipment Installation

Neither the equipment nor the installation shall impair the airworthiness of the aircraft.

3.1.1 Equipment Accessibility

The equipment controls installed for in-flight operation shall be readily accessible to a crew member from the normal seated position.

3.1.2 Aircraft Environment

The equipment performance shall be compatible with the environmental conditions present in the specific location in the aircraft where the equipment is installed.

3.1.3 Display Visibility

The appropriate operator/crew member(s) shall have an unobstructed view of the display(s) when in the normal sitting position. Display intensity shall be adjustable to levels suitable for data interpretation under all cockpit ambient light conditions ranging from total darkness to reflected sunlight. Visors, glareshields or filters may be an acceptable means of obtaining daylight visibility.

3.1.4 Antenna Location Considerations

Except for antenna blanking causing loss of signals during turns, operation of the equipment shall not be adversely affected by aircraft maneuvering, changes in attitude encountered in normal flight operations, or changes in aircraft configurations such as landing gear or flap extension.

3.1.5 Failure Protection

When installed in accordance with manufacturer's specifications, any probable failure of the installed equipment or system shall not degrade the normal operations of other equipments or systems.

3.1.6 Inadvertent Turnoff

Appropriate controls shall be provided with adequate protection against inadvertent turnoff.

3.1.7 Aircraft Power Source

The voltage and voltage tolerance characteristics of the equipment shall be compatible with the aircraft power source.

3.2 Installed Equipment Performance Requirements

The installed equipment shall meet the requirements in Section 2.0 in addition to, or as modified by, the requirements stated below.

3.2.1 Interference Effects

The equipment shall not be the source of harmful conducted or radiated interference nor be adversely affected by conducted or radiated interference from other equipment or systems installed in the aircraft.

NOTE: Electromagnetic compatibility problems noted after installation of this equipment may result from such factors as the design characteristics of previously installed systems or equipment and the physical installation itself. It is not intended that the equipment manufacturer design for all installation environments. The installing facility will be responsible for resolving any incompatibility between this equipment and previously installed equipment in the aircraft.

3.3 Conditions of Test

Conditions stated in the following subparagraphs are applicable to the equipment tests specified in Subsection 3.4.

3.3.1 Power Input

Unless otherwise specified, tests shall be conducted with the equipment powered by the aircraft's electrical power generating system.

3.3.2 Associated Equipment or Systems

Unless otherwise specified, all aircraft electrically operated equipment and systems shall be turned on before conducting interference tests.

3.3.3 Environment

During tests, the equipment shall not be subjected to environmental conditions that exceed those specified by the manufacturer.

3.3.4 Adjustment of Equipment

Circuits of the equipment under test shall be properly aligned and otherwise adjusted in accordance with the manufacturer's recommended practices prior to application of the specified tests.

3.4 Test Procedures for Installed Equipment Performance

The following test procedures are considered satisfactory in determining required equipment performance when the equipment is installed in an aircraft. Although specific test procedures are cited, it is recognized that other methods may be preferred by the installing activity. These alternate procedures may be used if they provide at least equivalent information. In such cases, the procedures cited herein should be used as one criterion in evaluating the acceptability of the alternate procedures. The equipment shall be tested to demonstrate compliance with the minimum requirements stated in Section 2.0. In order to meet this requirement, evidence of TSO authorization or test results supplied by the equipment manufacturer as proof of conformity may be accepted in lieu of bench tests performed by the installing activity.

3.4.1 Ground Test-Procedures

3.4.1.1 Conformity Inspection

Visually inspect the installed equipment to determine the use of acceptable workmanship and engineering practices. Verify that proper mechanical and electrical connections have been made and that the equipment has been located and installed in accordance with the manufacturer's recommendations.

3.4.1.2 Equipment Function

Vary all controls of the equipment through their full range to determine that the equipment is operating according to the manufacturer's instructions and that each control performs its intended function.

3.4.1.3 Interference Effects

With the equipment energized, individually operate each of the other electrically operated aircraft equipment and systems to determine that no significant conducted or radiated interference exists. Evaluate all reasonable combinations of control settings and operating modes. Operate communication and navigation equipment on at least the low, high and one mid-band frequencies. Make note of systems or modes of operation that should also be evaluated during flight. If appropriate, repeat tests using emergency power with the aircraft's batteries alone and the inverters operating.

3.4.1.4 Power Supply Fluctuations

Under normal aircraft conditions, cycle the aircraft engine(s) through all normal power settings and verify proper operation of the equipment as specified by the equipment manufacturer.

3.4.1.5 Equipment Accessibility

Determine that all equipment controls and displayed data are readily accessible and easily interpreted.

3.4.2 Flight Test Procedures

3.4.2.1 Displayed Data Readability

Determine that normal conditions of flight do not significantly affect the readability of displayed data.

3.4.2.2 Interference Effects

For aircraft equipment and systems that can be checked only in flight, determine that operationally significant conducted or radiated interference does not exist. Evaluate all reasonable combinations of control settings and operating modes. Operate communications and navigation equipment on at least the low, high and one mid-band frequencies.

4.0 EQUIPMENT OPERATIONAL PERFORMANCE CHARACTERISTICS

4.1 Required Operational Performance Requirements

To ensure the operator that operations can be conducted safely and reliably in the expected operational environment, there are specific minimum acceptable performance requirements that shall be met. The following paragraphs identify these requirements.

4.1.1 Power Input

Prior to flight, verify that the equipment is receiving primary input power necessary for proper operation.

4.1.2 Equipment Operating Modes

The equipment shall operate in each of its operating modes.

4.2 Test Procedures for Operational Performance Requirements

Operational equipment tests may be conducted as part of the normal pre-flight tests. For those tests which can only be run in flight, procedures should be developed to perform these tests as early during the flight as possible to verify that the equipment is performing its intended function(s).

4.2.1 Power Input

With the aircraft's electrical power generating system operating, energize the equipment and verify that electrical power is available to the equipment.

4.2.2 Equipment Operating Modes

Verify that the equipment performs its intended functions(s) for each of the operating modes available to the operator.

THIS PAGE INTENTIONALLY LEFT BLANK

M E M B E R S H I P

Special Committee 153

MINIMUM OPERATIONAL PERFORMANCE STANDARDS FOR AIRBORNE ILS LOCALIZER RECEIVING EQUIPMENT OPERATING WITHIN THE RADIO FREQUENCY RANGE OF 108-112 MHZ

CHAIRMAN

R. Powell	NARCO Avionics, Inc.

SECRETARY

J. Lohr	Radio Technical Commission for Aeronautics

MEMBERS

J. Anderson	Federal Aviation Administration
E. Augstman	Transport Canada
F. Bassett	Federal Aviation Administration
L. R. Berryhill	United Air Lines, Inc.
K. Beseke	Cessna Aircraft Company
L. Bessette	Federal Aviation Administration
K. Bierach	Radio Technical Commission for Aeronautics
R. Bowers	Air Transport Association of America
T. Brewer	U. S. Air Force
R. Broere	Dorne & Margolin, Inc.
D. Bruce	Transportation Systems Division
W. Chapman	Federal Aviation Administration
R. Chelikowsky	Collins Division, Rockwell International
B. Climie	Aeronautical Radio, Inc.
T. Cole	Transport Canada
C. Cunningham	Sperry Corporation
S. Dodington	Avionics Consultant
M. de Gironville	EUROCAE
P. Escritt	British Embassy
D. Featherstone	Aeronautical Radio, Inc.
N. Ferrett	Civil Aviation Authority (UK)
R. Frazier	Federal Aviation Administration
W. Fuchs	Radio Technical Commission for Aeronautics
R. Fuller	Sperry Avionics Radio Systems
I. Georgsson	Directorate of Civil Aviation (Iceland)
C. Hale	Federal Aviation Administration
C. Hanneman	King Radio Corporation
A. Helfrick	Consultant
J. Hutter	Cardion Electronics
R. Jago	Systems Control Technology, Inc.
L. James	Trans World Air Lines, Inc.
V. Jikharev	All-Union Scientific Research Institute of Radio Equipment (USSR)

R. Keating	Trans World Airlines, Inc.
T. Koshio	Electronic Industries Association of Japan
G. Leister	Helicopter Association International
E. Long	Aviation Systems, Inc.
C. Longman	Federal Aviation Administration
J. Longshore	McDonnell Douglas Corporation
D. Martinec	Aeronautical Radio, Inc.
D. Martinson	U. S. Air Force
A. Mayer	Collins Division, Rockwell International
R. McCarthy	Federal Aviation Administration
J. McDonnell	Douglas Aircraft Company
P. McHugh	Aircraft Owners & Pilots Association
E. Messer	Bendix Avionics Division
M. Miller	Boeing Commercial Airplane Company
D. Morgan	Collins Division, Rockwell International
A. Norwood	Consultant
R. O'Neill	Dorne and Margolin, Inc.
M. Parkes	British Embassy
B. Perret	EUROCAE
G. Quinby	Aircraft Owners & Pilots Association
I. Reese	Boeing Commercial Airplane Company
F. Rock	Federal Aviation Administration
S. Roederer	Rockwell International
J. Sawicki	Bendix Air Transport Division
*D. Schacher	Tel-Instrument Electronics
E. Scott	Aircraft Owners & Pilots Association
F. Shilling	Aeronautical Radio, Inc.
M. Shuey	Aircraft Owners & Pilots Association
D. Singh	Bendix General Aviation Avionics Division
R. Smith	Federal Aviation Administration
G. Smoak	Sperry Radio Systems
C. Sturm	Federal Aviation Administration
R. Sutton	Boeing Commercial Airplane Company
F. Swinburn	Civil Aviation Authority (UK)
J. Vilcans	U. S. Department of Transportation
S. Warner	Collins Division, Rockwell International
D. Weber	Becker Flugfunkwerk (Federal Republic of Germany)
F. White	Consultant
R. Wrenn	Federal Aviation Administration
C. Wright	National Business Aircraft Association
R. Zimmerman	Wilcox Electric Company

*SC-153 wishes to acknowledge the invaluable contribution Dan Schacher made to this document. He passed away in early 1985.

A P P E N D I X A

VOR 9,960 Hz HARMONIC GENERATOR

AND

AM MODULATOR AND SIGNAL MIXER

THIS PAGE INTENTIONALLY LEFT BLANK

VOR 9,960 Hz HARMONIC GENERATOR

It has been determined that the performance of a VOR receiver in the presence of a strong adjacent channel VOR signal is very much a function of the 9,960 Hz harmonic sidebands of the strong adjacent signal. A test unit, Figures A-1, A-2 and A-3, permits the controlled harmonic modulation of a standard VOR test signal. The levels of harmonic sideband modulation are taken from ICAO Annex 10 and simulate the worst condition permitted for a ground station in a 50 kHz environment. These levels are:

SUBCARRIER	LEVEL
9,960 Hz	0 dB reference
2nd harmonic	-30 dB
3rd harmonic	-50 dB
4th harmonic	-60 dB

Initial Harmonic Generator Adjustments

Equipment Required

VHF signal generator (Hewlett Packard 8640-004, or equivalent).
Low frequency sine wave function generator.
Frequency counter (Bechman Berkley, or equivalent).
Wave analyzer (Hewlett Packard 302A, or equivalent).
AC VTVM (Hewlett Packard 400D, or equivalent).
Oscilloscope (Tektronix 465, or equivalent).

1.0 Adjust Procedure (Filter Alignment)

a. Remove U3 and U10, (see Figure A-2).

b. Connect audio oscillator and oscilloscope to test points listed below. Set oscilloscope to X-Y. Adjust audio oscillator level to 1 VRMS. Adjust tuning potentiometers for zero phase (a straight line) on the scope. When alignment is completed replace U3 and U10, (see Figure A-2).

Audio Input Set Frequency	Connect to	Connect Oscilloscope X	Y	Adjust For Zero Phase (Straight Line)
9,960 Hz	TP1	TP1	TP2	R6
8,665 Hz	TP1	TP2	TP3	R11
11,450 Hz	TP1	TP3	TP4	R16
22,250 Hz	TP5	TP5	TP6	R25
17,840 Hz	TP5	TP6	TP7	R29
35,672 Hz	TP5	TP5	TP8	R33
44,500 Hz	TP5	TP8	TP9	R37
33,380 Hz	TP1	TP1	TP10	R41
26,750 Hz	TP1	TP10	TP11	R45

Adjust Procedure (Harmonic Levels)

a. Set up the equipment as shown in Figure A-1. Set the frequency of the Low Frequency Sine Wave Function Generator to 9,960, +5 Hz and its output level such that 1.5 VAC is obtained at the Harmonic Generator's Modulation OUTPUT terminal.

b. Adjust the modulation control on the VHF Generator for 30% modulation.

c. Tune the wave analyzer for maximum indication at approximately 10 kHz. Record this output level for reference (the output level should be between 10.0 and 3.0 VAC.)

d. Tune the wave analyzer for maximum indication at approximately 20 kHz. Adjust the 2nd harmonic level control on the harmonic generator such that the measured level on the wave analyzer is 30 dB below the reference level recorded in Step c.

e. Tune the wave analyzer for maximum indication at approximately 30 kHz. Adjust the 3rd harmonic level control on the harmonic generator such that the measured level on the wave analyzer is 50 dB below the reference level recorded in Step c.

f. Tune the wave analyzer for maximum indication at approximately 40 kHz. Adjust the 4th harmonic level control on the harmonic generator such that the measured level on the wave analyzer is 60 dB below the reference level recorded in Step c.

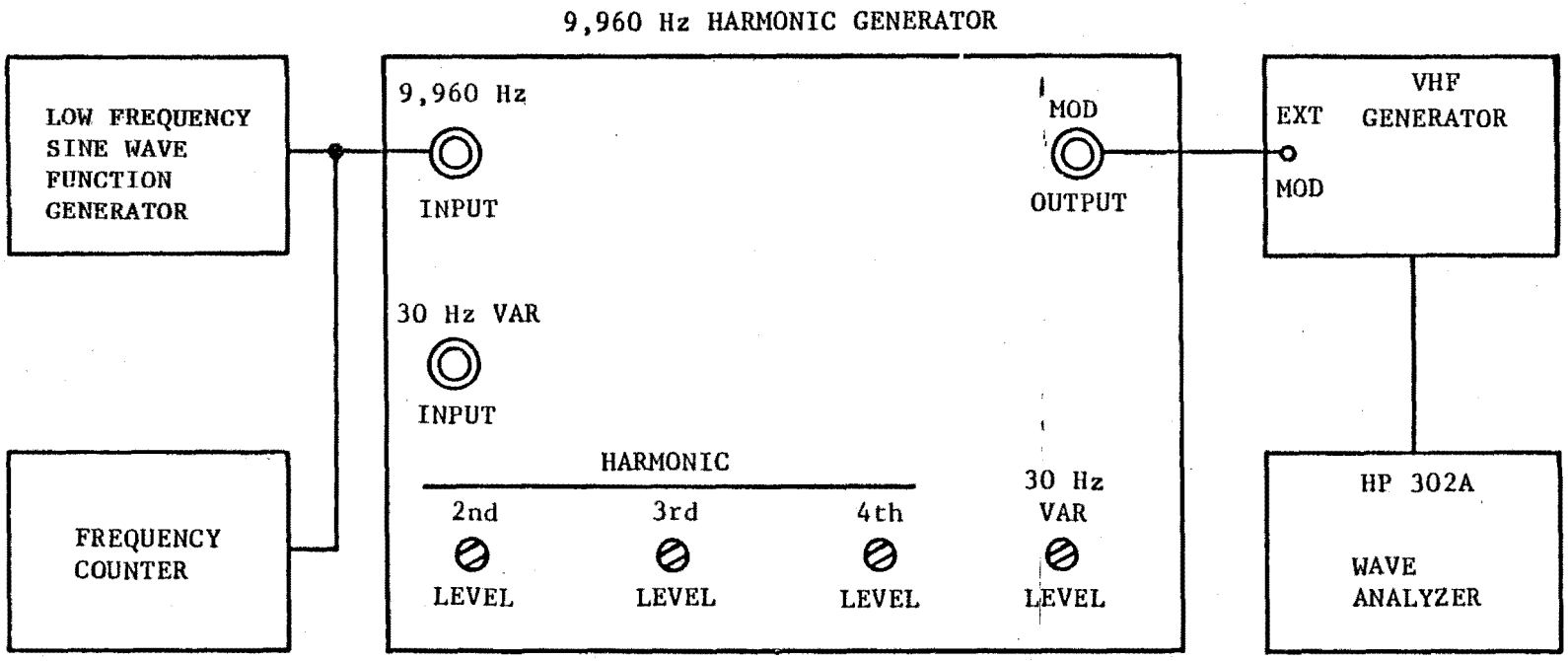
9,960 Hz HARMONIC GENERATOR
LOW FREQUENCY SINE WAVE FUNCTION GENERATOR
FREQUENCY COUNTER
9,960 Hz
INPUT
30 Hz VAR
INPUT
HARMONIC
2nd
3rd
4th
LEVEL
LEVEL
LEVEL
MOD
OUTPUT
30 Hz VAR
LEVEL
EXT
MOD
VHF GENERATOR
HP 302A
WAVE ANALYZER

Figure A-1

THIS PAGE INTENTIONALLY LEFT BLANK

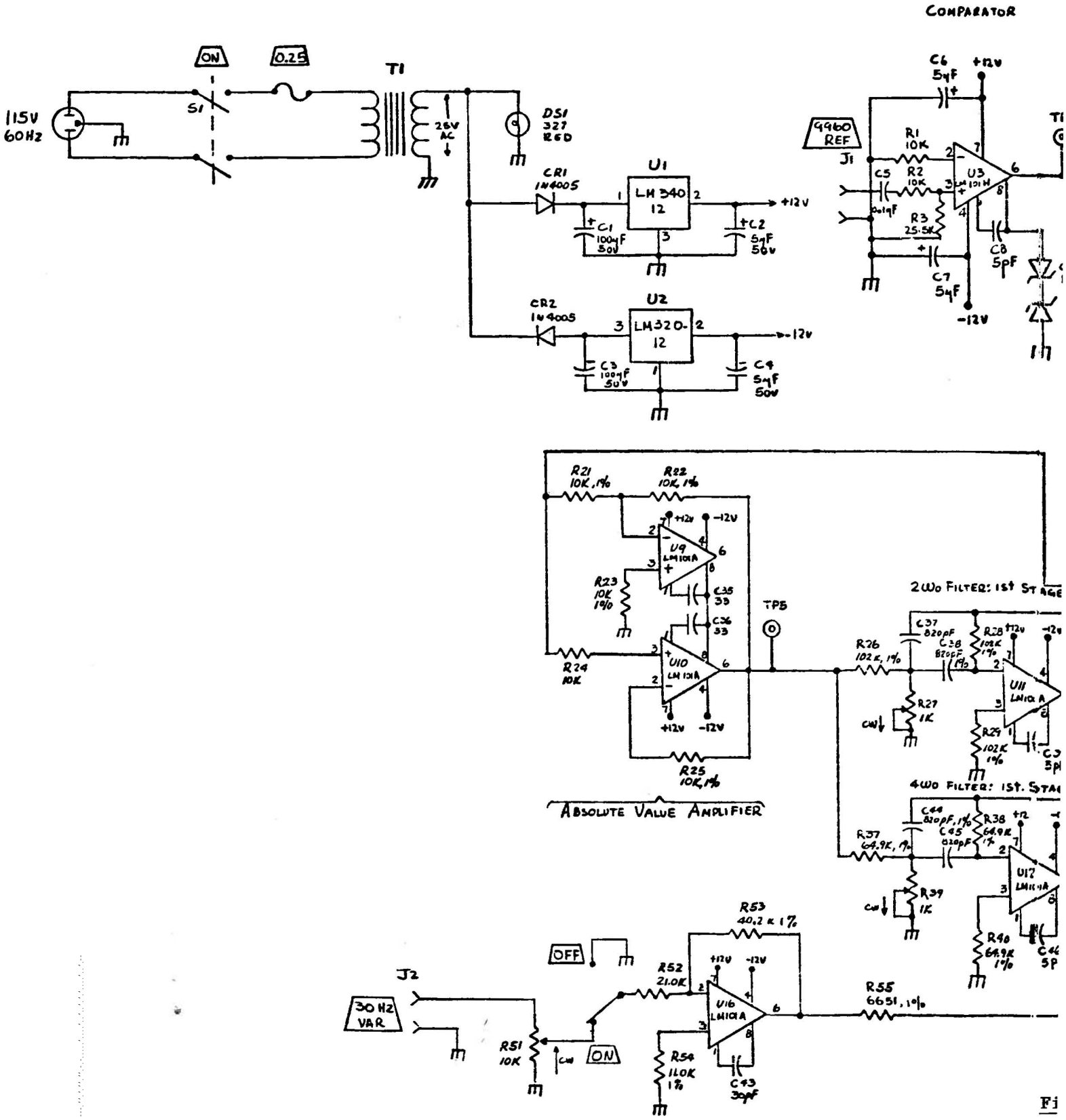
COMPARATOR
115V 60Hz
ON
0.25
S1
T1
25V AC
DS1 327 RED
CR1 1N4005
U1 LM 340 12
C1 100μF 50V
C2 5μF 50V
+12V
CR2 1N4005
U2 LM320-12
C3 100μF 50V
C4 5μF 50V
-12V
9960 REF
J1
C6 5μF
R1 10K
R2 10K
C5 .01μF
R3 25.5K
U3 LM 101H
C8 5pF
C7 5μF
R21 10K, 1%
R22 10K, 1%
U9 LM101A
R23 10K 1%
C35 33
C36 33
U10 LM 101A
R24 10K
R25 10K, 1%
ABSOLUTE VALUE AMPLIFIER
TP5
2Wo FILTER: 1ST STAGE
R26 102K, 1%
C37 820pF
C38 820pF 1%
R28 102K 1%
R27 1K
U11 LM101A
R29 102K 1%
4Wo FILTER: 1ST. STAGE
R37 64.9K, 1%
C44 820pF, 1%
C45 820pF
R38 64.9K 1%
R39 1K
U12 LM101A
R40 64.9K 1%
R53 40.2K 1%
OFF
R52 21.0K
U16 LM101A
R54 110K 1%
C43 30pF
R55 6651, 1%
J2
30 Hz VAR
R51 10K
ON

Fi

ONIC GENERATOR

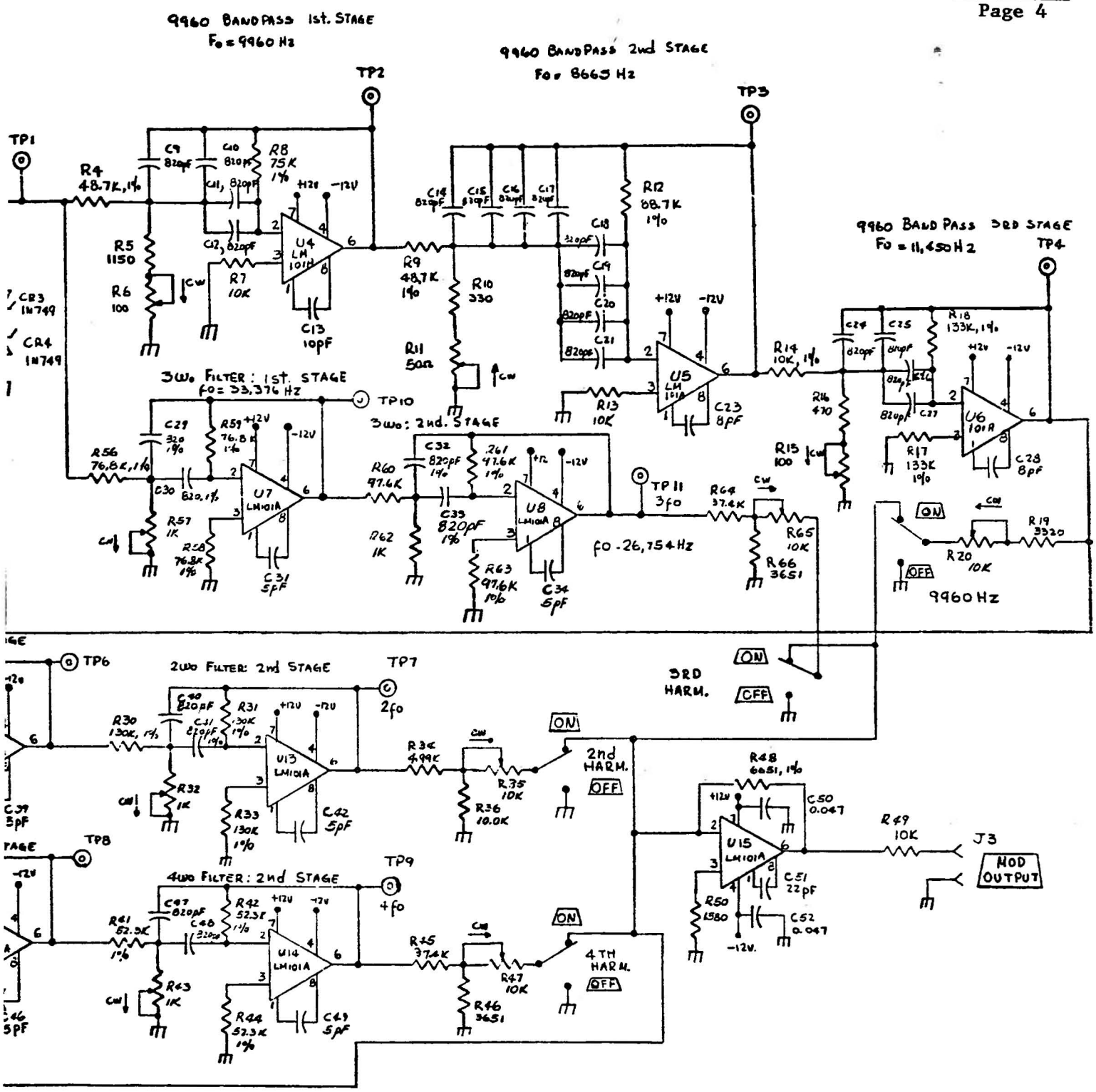

Figure A-2

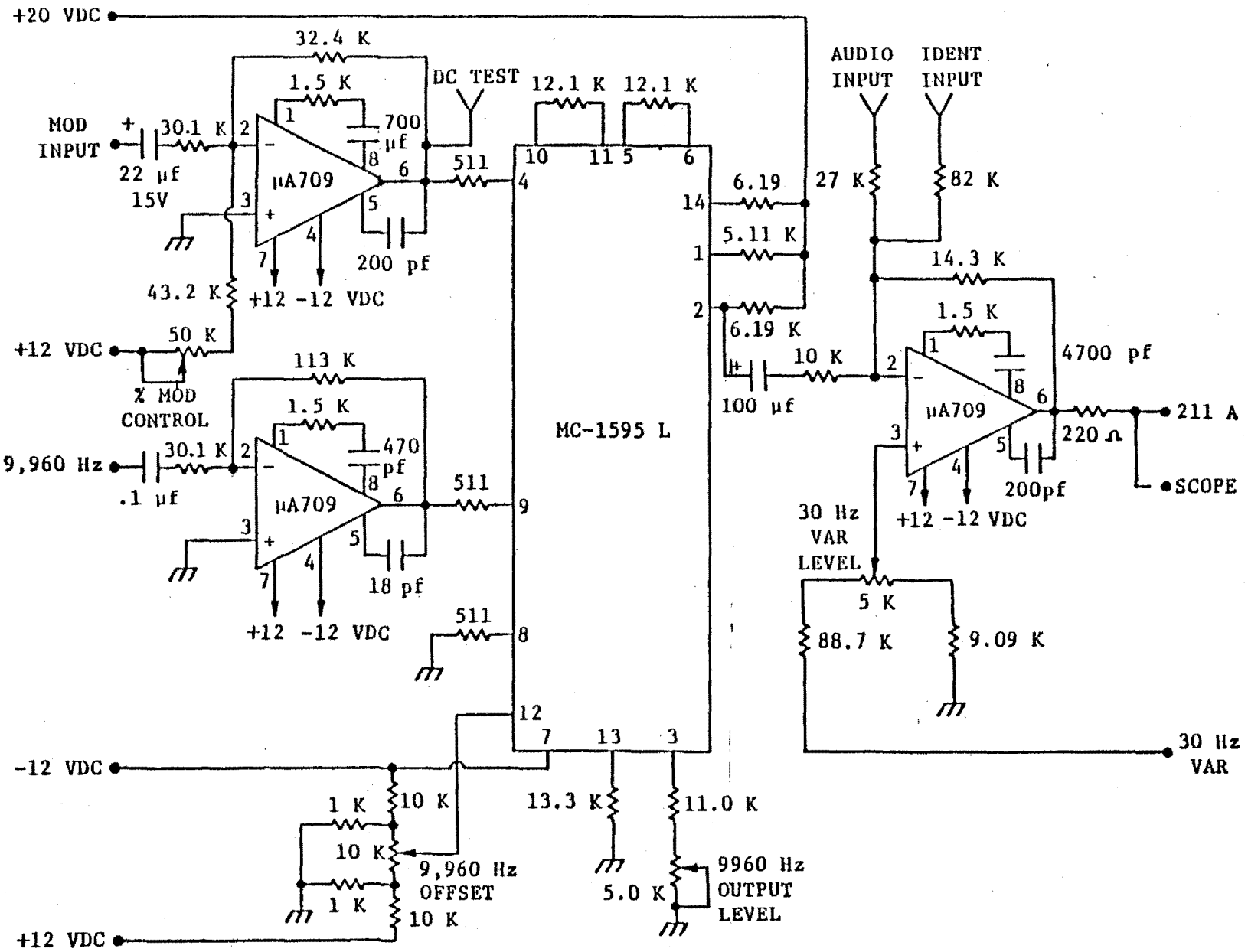

Figure A-3 AM Modulator and Signal Mixer

THIS PAGE INTENTIONALLY LEFT BLANK

A P P E N D I X B

STATISTICAL PROCEDURE FOR THE DETERMINATION OF VOR BEARING ACCURACY

THIS PAGE INTENTIONALLY LEFT BLANK

1.0 INTRODUCTION

1.1 Purpose

The analysis of VOR bearing accuracy requires considerable mathematical effort on the part of the test engineer. The purpose of this appendix is to reduce to a minimum the mathematical manipulations for determining bearing accuracy.

1.2 Assumptions

Under certain assumptions, the analysis of VOR bearing accuracy is reduced to an almost plug-in form with simple additions and square root operations. There are seven random variables that must be considered when determining bearing accuracy. Because of the randomness of the variables, statistical techniques must be used. Each of these random variables is characterized by an assumed probability density distribution function. All variables are assumed to be independent of one another. Table B-1 lists these variables with their assumed probability density distributions. The variables are subscripted for identification purposes.

When the random variable is normally distributed, certain additional simplifying assumptions will be made.

a. When the normally distributed random variable is located at its mean value, it contributes 0 bearing error to the accuracy of the system.

b. When this same variable displaces to the right or left of its mean value, the bearing error increases in magnitude in a linear manner (see Figure B-1).

c. The maximum limits of variation of the random variable will correspond to the plus or minus three standard deviations ($\pm 3\sigma$) of its normal position.

TABLE B-1 ASSUMED DISTRIBUTION FUNCTIONS OF RANDOM VARIABLES

VARIABLE	DISTRIBUTION	CENTERED (MEAN)	STANDARD DEVIATION σ
Variation in frequency of the audio signals Y_1	Normal	0% variation in frequency	1/3 maximum limits of variable
Variation in primary power voltage Y_2	Normal	0% variation in primary power	1/3 maximum limits of variable
Variation in percent modulation Y_3	Normal	0% variation in % modulation	1/3 maximum limits of variable
Variation of ambient temperature Y_4	Rectangular		
Variation in carrier frequency Y_5	Normal	0% variation in in carrier frequency	1/3 maximum limits of variable
Variation in power supply frequency Y_6	Normal	0% variation in power supply frequency	1/3 maximum limits of variable
Variation in RF signal level Y_7	Rectangular		

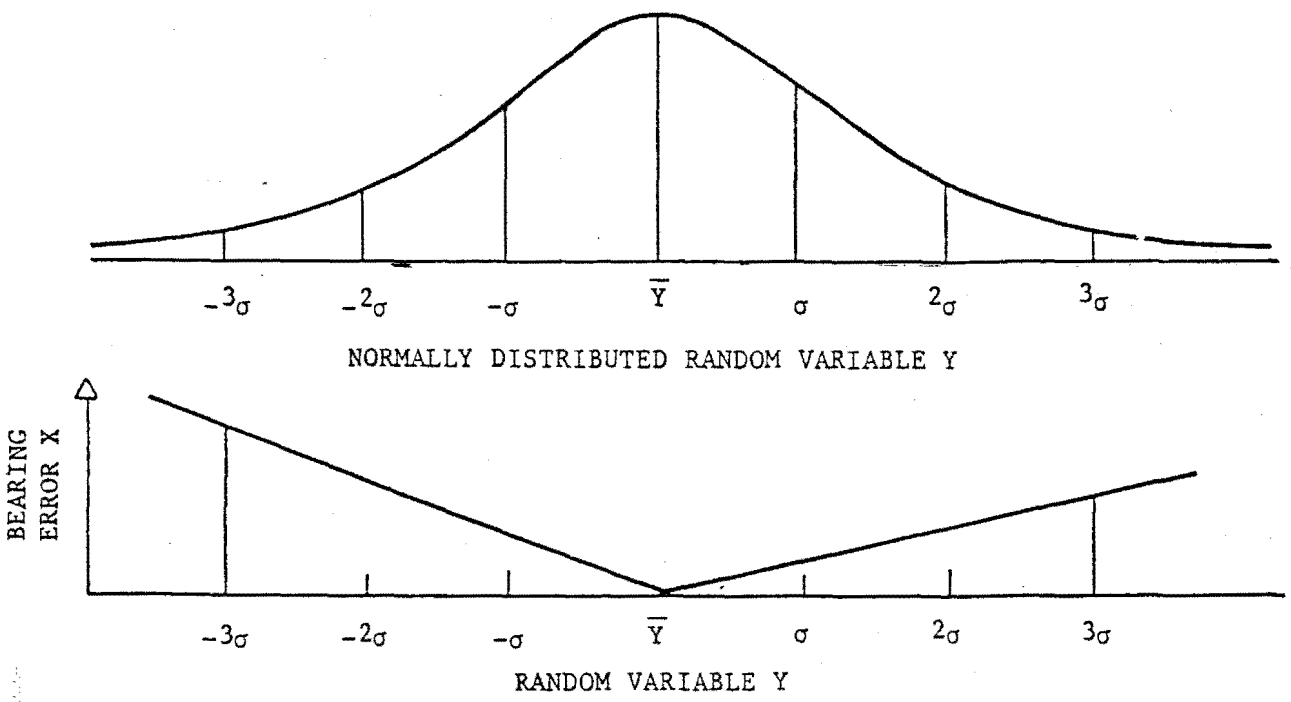

FIGURE B-1 EFFECT OF NORMALLY DISTRIBUTED RANDOM VARIABLE UPON BEARING ERROR

THIS PAGE INTENTIONALLY LEFT BLANK

2.0 PROCEDURE FOR COMPUTATION OF MEAN BEARING ERROR AND VARIANCE WHEN RANDOM VARIABLE IS NORMALLY DISTRIBUTED

2.1 Mean Bearing Error

Because of the linear relationship between the random variable and bearing error, it is necessary to know only two values of bearing error. These values of bearing error correspond to the $+3\sigma$ and -3σ values of the random variable. For evaluation purposes, the random variable is displaced to the $+3\sigma$ and -3σ values and the bearing error recorded as X_H and X_L. The subscripts H and L designate the high value of the random variable ($+3\sigma$) and the low value of the random variable (-3σ), respectively. It should be noted that a bearing error $-X_R$ may exist when all the random variables are centered at their mean values y_i for i = 1, 2, 3, 4, 5, 6 and 7. This residual bearing error is the system bearing error under standard operating conditions and must be algebraically subtracted from the high and low values of bearing error actually read in the laboratory during the test. Thus X_H and X_L are defined:

$$X_H = X_{H_M} - X_R \qquad X_L = X_{L_M} - X_R \tag{1}$$

where X_{H_M} is the bearing error measured in the laboratory when the random variable is displaced to the high end of its extreme value ($+3\sigma$).

X_{L_M} is the bearing error measured in the laboratory when the random variable is displaced to the low end of its extreme value (-3σ).

X_R is the system bearing error when all the random variables are centered at their mean values (standard conditions).

It will be pointed out in Section 4.0 that, when calculating the mean bearing error of the complete system, the bearing error under standard conditions X_R, which was subtracted from X_{H_M} and X_{L_M} (equation (1)), must be algebraically added back into the system in order to yield the proper overall system mean bearing error X_T.

The two values of bearing error X_H and X_L then are used to determine the mean value of the bearing error $\bar{X}$ for each random variable. $\bar{X}$ is defined as:

$$\bar{X} = C(X_H + X_L) \tag{2}$$

where X_H represents the bearing error when the random variable is displaced to $+3\sigma$.

X_L represents the bearing error when the random variable is displaced to -3σ.

C = .13306.

NOTE: When using the above equation and the following equations, the signs of all quantities must be included in the calculation. For example:

$$\bar{X} = C(X_H + X_L)$$

If $X_H = +5$ degrees

$X_L = -2$ degrees

$$\bar{X} = C(+5 + (-2))$$

$$\bar{X} = C(+3)$$

The constant C takes into account the weighting factor from the normal distribution and the linear relationship between the variables and the bearing error (see Figure B-1). The value of the constant is determined in Section 7.0. In equation (2), the algebraic sign of the bearing errors X_H and X_L must be utilized.

There may arise a problem as to what constitutes a positive bearing error, >0, and a negative bearing error, <0. Because adjustments can be made at the signal generator or omnibearing selector, the error may be positive by one adjustment and negative by the other adjustment. However, in determining bearing accuracy, it is only important that consistency be maintained throughout the entire test program.

For simplification purposes, a complete table of $\bar{X}$ has been furnished for all combinations of X_H and X_L (see Section 8.0, Tables B-6A through D). The range of X_H and X_L is from 0 degree to $\pm$6.0 degrees in 1/10 degree increments up to 3.0 degrees and in 2/10 degree increments up to 6.0 degrees. This table is broken into four quadrants depending on the signs of X_H and X_L (see Figure B-2).

Using the proper quadrant, the table is entered in the row corresponding to X_L and the column corresponding to X_H. The intersection of this row and column furnishes $\bar{X}$ for the variable Y_i. This same procedure must be repeated for all values of i (i = 1, 2, 3, 5 and 6), and tabulated as in Table B-2.

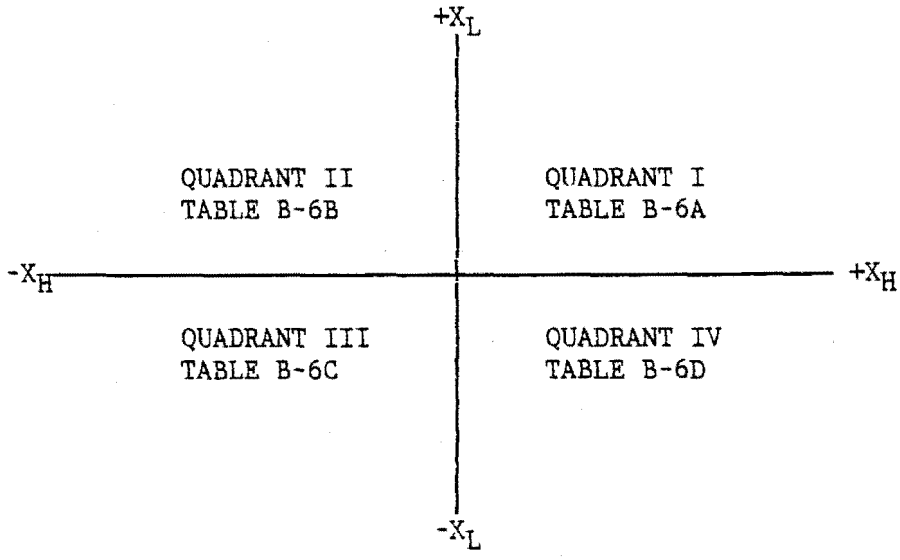

FIGURE B-2 TABLE DESIGNATION FOR DETERMINING $\bar{X}$

TABLE B-2 TABULAR FORM FOR COMPUTING TOTAL MEAN AND VARIANCE OF BEARING ERROR

VARIABLE	$\bar{X}$	S^2
Y_1		
Y_2		
Y_3		
Y_4		
Y_5		
Y_6		
Y_7		
TOTAL $\bar{X}$ & S^2 IS SUMMATION		

2.2 Variance of Bearing Error

In a similar manner, the variance S^2 is determined from the formula

$$S^2 = K(X_H{}^2 + X_L{}^2) - \overline{X}^2 \qquad (3)$$

where X_H and X_L are the same values as used in determining $\overline{X}$,

$\overline{X}$ is determined from equation (2) or Table B-2,

$K = .05556$.

The constant K is similar to the constant C and takes into account the weighting factor from the normal distribution and the linear relationship between the variable and the bearing error. The value of the constant K is determined in Section 6.0.

For simplification purposes, a complete table of S^2 has been furnished for all combinations of X_H and X_L, similar to the table for determining $\overline{X}$ (see Section 8.0, Tables B-6E and B-6F). This table is broken up into four quadrants, of which quadrants I and III are identical and quadrants II and IV are identical (see Figure B-3).

Using the proper quadrant, the table is entered in the row corresponding to X_L and the column corresponding to X_H. The intersection of this row and column furnishes S^2 for variable Y_i. The same procedure must be repeated for all values of i (i = 1, 2, 3, 5 and 6), and entered in Table B-2.

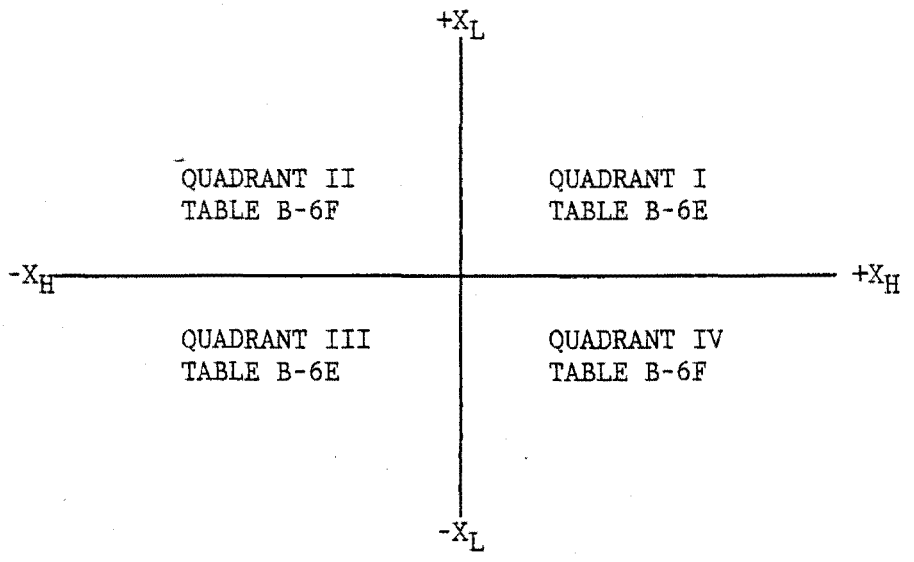

FIGURE B-3 TABLE DESIGNATION FOR DETERMINING S^2

3.0 PROCEDURE FOR COMPUTATION OF MEAN BEARING ERROR AND VARIANCE WHEN RANDOM VARIABLE IS RECTANGULARLY DISTRIBUTED

One of the variables which exhibits the rectangular probability density distribution is temperature. The computation of $\bar{X}$ and S^2 requires a hand calculation. In addition, there are five different temperature ranges. Therefore, the manufacturer must use the formulas corresponding to the category for which his receiver is designed.

The mean and variance of bearing error due to temperature variation is determined from bearing error measurement in 10-degree temperature increments, starting at the lower temperature extreme of the category. Proper weighting is given when the temperature range is not an integral multiple of 10 degrees. For example, Category C has a temperature range of 95 degrees. The formulas for the means and variance of bearing error due to temperature variation are furnished below. The derivation of these formulas is furnished in Section 7.0. The subscripted numbers indicate the temperature at which the bearing error is measured. Here again the residual bearing error, X_R, under standard conditions must be algebraically subtracted from each bearing measurement made in the laboratory. For example $X_{-35} = X_{-35}$ (measured) $-X_R$.

Category A

Temperature Range -54 to +55 degrees C.

For simplicity, assume temperature range is -55 to +55 degrees C.

$$\bar{X}_A = \frac{10}{110}\left[\frac{X_{-55}}{2} + X_{-45} + X_{-35} + X_{-25} + X_{-15} + X_{-5} + X_{+5} + X_{+15} + X_{+25} + X_{+35} + X_{+45} + \frac{X_{+55}}{2}\right] \quad (4)$$

$$S_A^2 = \frac{10}{440}\Big[(X_{-55}+X_{-45})^2 + (X_{-45}+X_{-35})^2 + (X_{-35}+X_{-25})^2 + (X_{-25}+X_{-15})^2 + (X_{-15}+X_{-5})^2 + (X_{-5}+X_{+5})^2 + (X_{+5}+X_{+15})^2 + (X_{+15}+X_{+25})^2 + (X_{+25}+X_{+35})^2 + (X_{+35}+X_{+45})^2 + (X_{+45}+X_{+55})^2\Big] - \bar{X}_A^2 \quad (5)$$

Category B

Temperature Range -46 to +55 degrees C.

Assume temperature range is -45 to +55 degrees C.

$$\bar{X}_B = \frac{10}{100}\left[\frac{X_{-45}}{2} + X_{-35} + X_{-25} + X_{-15} + X_{-5} + X_{+5} + X_{+15} + X_{+25} + X_{+35} + X_{+45} + \frac{X_{+55}}{2}\right] \quad (6)$$

$$S_B^2 = \frac{10}{400}\left[(X_{-45}+X_{-35})^2 + (X_{-35}+X_{-25})^2 + (X_{-25}+X_{-15})^2 + (X_{-15}+X_{-5})^2 + (X_{-5}+X_{+5})^2 + (X_{+5}+X_{+15})^2 + (X_{+15}+X_{+25})^2 + (X_{+25}+X_{+35})^2 + (X_{+35}+X_{+45})^2 + (X_{+45}+X_{+55})^2\right] - \bar{X}_B^2 \quad (7)$$

Category C

Temperature Range -40 to +55 degrees C.

$$\bar{X}_C = \frac{10}{95}\left[\frac{X_{-40}}{2} + X_{-30} + X_{-20} + X_{-10} + X_0 + X_{+10} + X_{+20} + X_{+30} + X_{+40} + \frac{3}{4}X_{+50} + \frac{1}{4}X_{+55}\right] \quad (8)$$

$$S_C^2 = \frac{10}{380}\left[(X_{-40}+X_{-30})^2 + (X_{-30}+X_{-20})^2 + (X_{-20}+X_{-10})^2 + (X_{-10}+X_0)^2 + (X_0+X_{+10})^2 + (X_{+10}+X_{+20})^2 + (X_{+20}+X_{+30})^2 + (X_{+30}+X_{+40})^2 + (X_{+40}+X_{+50})^2 + \frac{(X_{+50}+X_{+55})^2}{2}\right] - \bar{X}_C^2 \quad (9)$$

Category D

Temperature Range -15 to +55 degrees C.

$$\bar{X}_D = \frac{10}{70}\left[\frac{X_{-15}}{2} + X_{-5} + X_{+5} + X_{+15} + X_{+25} + X_{+35} + X_{+45} + \frac{X_{+55}}{2}\right] \quad (10)$$

$$S_D^2 = \frac{10}{280}\left[(X_{-15}+X_{-5})^2 + (X_{-5}+X_{+5})^2 + (X_{+5}+X_{+15})^2 + (X_{+15}+X_{+25})^2 + (X_{+25}+X_{+35})^2 + (X_{+35}+X_{+45})^2 + (X_{+45}+X_{+55})^2\right] - \bar{X}_D^2 \quad (11)$$

Categories E and F

Temperature Range -15 to +40 degrees C.

$$\bar{X}_{E\&F} = \frac{10}{55}\left[\frac{X_{-15}}{2} + X_{-5} + X_{+5} + X_{+15} + X_{+25} + \frac{3X_{+35}}{4} + \frac{X_{+40}}{4}\right] \tag{12}$$

$$S_{E\&F}^2 = \frac{10}{220}\left[(X_{-15}+X_{-5})^2 + (X_{-5}+X_{+5})^2 + (X_{+5}+X_{+15})^2 + (X_{+15}+X_{+25})^2 + (X_{+25}+X_{+35})^2 + \frac{(X_{+35}+X_{+40})^2}{2}\right] - \bar{X}_{E\&F}^2 \tag{13}$$

Another variable that normally exhibits rectangular distribution is RF level. It is assumed that the error is linear with respect to the variable RF level.

Data is required at the plus and minus three sigma points. These errors then may be applied to the formulas following. In this case, however, the plus and minus environmental limits must be applied in the calculations.

$$\bar{X} = \frac{X_H Y_H - X_L Y_L}{2(Y_H - Y_L)} \tag{14}$$

$$S^2 = \frac{X_H^2 Y_H - X_L^2 Y_L}{3(Y_H - Y_L)} - \bar{X}^2 \tag{15}$$

where X_L and X_H = error at low and high environmental extremes.

Y_L and Y_H = low and high environmental extremes measured from the point of standard conditions.

An example of Y_L and Y_H is the case where the VOR RF level is varied from 1000 to 10 microvolts and from 1,000 to 20,000 microvolts. In this case Y_L is -40 dB and Y_H is 26 dB. Y_L and Y_H are expressed in dB to take into account the exponential effect of RF level.

The calculated values of $\bar{X}$ and S^2 for temperature variation and RF variation are entered in Table B-2.

THIS PAGE INTENTIONALLY LEFT BLANK

4.0 COMPLETE SYSTEM ERROR

The complete system error is determined from the values of $\bar{X}$ and S^2 entered in Table B-2. Use is made of the central limit theorem of mathematical probability, which says:

> "Whatever be the distributions of the independent variables X_i -- subject to certain very general conditions -- the sum $X = X_i + X_2 + --- + X_n$ is asymptotically normally distributed with mean $m = m_1 + m_2 + --- + m_n$
>
> variance $\sigma^2 = \sigma_1{}^2 + \sigma_2{}^2 + --- + \sigma_n{}^2$."

Thus the total system mean $\bar{X}_T$ and variance $S_T{}^2$ is the sum of the individual means and variances respectively, that is,

$$\bar{X}_T = \bar{X}_1 + \bar{X}_2 + \bar{X}_3 + \bar{X}_4 + \bar{X}_5 + \bar{X}_6 + \bar{X}_7 + \bar{X}_R \qquad (16)$$

$$S_T{}^2 = S_1{}^2 + S_2{}^2 + S_3{}^2 + S_4{}^2 + S_5{}^2 + S_6{}^2 + S_7{}^2 \qquad (17)$$

where X_R is the residual bearing error under standard conditions that have been algebraically subtracted from the laboratory measurements of bearing error. Now take the square root of S^2 and multiply by 2. The resulting value of bearing error represents the bearing accuracy which will be exceeded only 5% of the time.

This complete evaluation of bearing accuracy must be repeated 24 times, on 12 radials 0 degrees, 30 degrees, 60 degrees, ---, 330 degrees and in the TO-FROM condition. If the resulting bearing accuracy exceeds the minimum performance standards for any one of the 24 tests, the unit is to be rejected.

THIS PAGE INTENTIONALLY LEFT BLANK

5.0 NUMERICAL EXAMPLE

A numerical example is used to demonstrate the complete procedure that the test engineer is expected to encounter. All values are expressed in degrees. The condition TO or FROM and the radial should be recorded.

5.1 Laboratory Procedure

a. The first step in evaluating bearing accuracy is to determine X_R, the residual bearing error, when all random variables are at standard conditions, that is $y_i = y_i$ (i = 1, 2, 3, 4, 5, 6 and 7). The value of X_R is recorded on the VOR Bearing Accuracy Data Sheet, Table B-3.

b. The variable Y_1 now is displaced to its $+3\sigma$ and -3σ values and bearing errors recorded in column II. This is the measured value of bearing error. Upon completion, the variable is returned to its mean value, y_1.

c. Repeat step b. for variables y_2, y_3, y_5, y_6 and y_7 and enter results in column II of Table B-3.

d. With variables y_i (i = 1, 2, 3, 5, 6, 7) centered about their respective mean values, the temperature variable y_4 is displaced to its lowest value within the specified temperature range and the bearing error recorded on a separate data sheet.

e. The temperature now is increased by 10 degrees C and bearing error again recorded.

f. Repeat step e. as many times as applicable.

g. Measure the bearing error at the maximum temperature of the specified range and record. Depending upon the category (A, B, C, D, E or F) the temperature used in step g. may coincide with the last temperature reading of step f. If the temperature used in step g. coincides with that in step f., disregard step g.

All of the laboratory measurements now have been completed for the designated condition and radial. Computation of the mean and variance of bearing error for each random variable is the next point of discussion.

5.2 Computational Procedure

Numerical values will be used in Table B-3 for illustrative purposes. Let $X_R = -0.2$ degrees. The values of X_{L_M} and X_{H_M}

already have been entered in column II of Table B-3. The values of X_L and X_H are listed in column III by algebraically subtracting X_R (-0.2 degrees) from X_{L_M} and X_{H_M}.

The mean bearing error for variable y_i (i = 1, 2, 3, 5, 6) now may be calculated either by equation (2) or by use of Tables B-6A through B-6D of Section 8.0. If the tables are used, the quadrant in which X_L and X_H lay first must be determined from Figure B-2, to know which table number to use in Section 8.0 for calculating the mean bearing error. The mean value of bearing error for each variable is entered in column IV of Table B-3 along with the table number used (for checking purposes). The mean value of bearing error for RF level variation (y_7) is calculated using equation (14) and the result entered in column IV of Table B-3. The mean value of bearing error for the temperature variable is calculated by hand and entered in column IV of Table B-3.

Similarly, the variance of bearing error for variable y_i (i = 1, 2, 3, 5, 6) may be calculated either by equation (3) or by use of Table B-6E or B-6F in Section 8.0. If the tables are used, the quadrant in which X_L and X_H lay must be of bearing error. The variance of each bearing error for each variable is entered in column V of Table B-3, along with the table used to compute the variance. The variance of bearing error for RF level variation (y_7) is calculated using equation (15) and the result entered in volume V of Table B-3. The variance of bearing error for the temperature variable is calculated by hand and entered in column V of Table B-3.

The complete system mean and variance of bearing accuracy is obtained by algebraically summing columns IV and V, respectively. The residual bearing error X_R (-0.2 degrees) that was algebraically subtracted from X_{L_M} and X_{H_M} now must be algebraically added to the sum of $\bar{X}$ to yield the total system mean $\bar{X}_T$. This is true mean value of the bearing error. Taking the square root of the sum of variances and multiplying by 2 (called the 2σ value) represents the range of bearing error about the true mean that will contain 95% of all bearing error measurements for the particular radial and TO or FROM condition. From the example in Table B-3, $\bar{X}_T$ = .416 degrees and $2\sigma_T$ = 1.514 degrees, 95% of all bearing error measurements shall lie within $\bar{X}_T - 2\sigma_T$ and $\bar{X}_T + 2\sigma_T$, which is equal to -1.930 degrees and 1.098 degrees, respectively.

If the $\bar{X}_T \pm 2\sigma_T$ value is less than the minimum performance standard, the unit is accepted for that particular radial and condition of operation. The exact same procedure is repeated 24 times (12 radials 0 degrees, 30 degrees, 60 degrees, ---, 330 degrees and two conditions TO or FROM). For a VOR receiver to be accepted, it must pass the minimum performance standards for all 24 tests.

TABLE B-3 VOR BEARING ACCURACY DATA SHEET

RADIAL: 150 DEGREES CONDITION TO ☑ FROM ☐

RESIDUAL BEARING ERROR AT STANDARD CONDITIONS
X_R = -0.2 DEGREES

I	II		III		IV		V	
Variable Y_i	Laboratory Measurements of Bearing		$X_1 = X_{L_M} - X_R$ $X_H = X_{H_M} - X_R$		Mean Bearing Error		Variance of Bearing Error	
	X_{L_M} °	X_{H_M} °	X_L °	X_H°	Use Table Number	$\bar{X}_i$°	Use Table Number	S_i^2
Y_1	+0.1	-0.2	+0.3	0.0	B-6A	+.0399	B-6E	.0034
Y_2	+0.3	+0.1	+0.5	+0.3	B-6A	+.1064	B-6E	.0076
Y_3	-0.3	-0.4	-0.1	-0.2	B-6C	-.0399	B-6E	.0012
Y_4						-.603		.374
Y_5	0.0	+0.3	+0.2	+0.5	B-6A	+0931	B-6E	.0074
Y_6	-0.5	+0.2	-0.3	+0.4	B-6D	+0133	B-6F	.0137
Y_7	+0.7	-0.7	+0.9	-0.5		+.1742		0.1661
$\bar{X} = \sum_{i=1}^{7} \bar{X}_i$					-.216			
$\bar{X}_T = \sum_{i=1}^{7} \bar{X}_i + X_R$					-.416			
$S_T^2 = \sum_{i=1}^{7} S_i^2$							.573	
$\sigma T = \sqrt{S_T^2}$							.757	
$2\sigma T$							1.514	
$\bar{X}_T + 2\sigma_T$							-1.930	
$\bar{X}_T - 2\sigma_T$							+1.098	

5.3 Illustrative Example - Computation of Bearing Error Due to Temperature Variation (see Figure B-4)

Temperature Range - Category C (-40 to +55 degrees C).

$$\bar{X}_C = \frac{10}{95}\left[\frac{X_{-40}}{2} + X_{-30} + X_{-20} + X_{-10} + X_0 + X_{+10} + X_{+20} + X_{+30} + X_{+40} + \frac{3}{4}X_{+50} + \frac{1}{4}X_{+55}\right]$$

$$\bar{X} = \frac{10}{95}\left[\frac{-1.8}{2} -1.52 -1.25 -.97 -.70 -.42 -.14 +.02 +.06 +3/4(.09) +1/14(.1)\right]$$

$$\bar{X} = \frac{10}{95}\left[-5.90 +.02 +.06 +.0675 +.025\right]$$

$$\bar{X} = \frac{10}{95}\left[-5.90 +.1725\right] = \frac{10}{95}\left[-5.7275\right] = -.6028 \qquad \boxed{\bar{X} = -.603}$$

$$S^2 = \frac{10}{380}\left[(X_{-40}+X_{-30})^2 + (X_{-30}+X_{-20})^2 + (X_{-20}+X_{-10})^2 + (X_{-10}+X_0)^2 + (X_0+X_{+10})^2 + (X_{+10}+X_{+20})^2 + (X_{+20}+X_{+30})^2 + (X_{+30}+X_{+40})^2 + (X_{+40}+X_{+50})^2 + \frac{(X_{+50}+X_{+55})^2}{2}\right] - \bar{X}^2$$

$$S^2 = \frac{10}{380}\left[(-1.8 \quad -1.52)^2 + (-1.52 \ -1.25)^2 + (-1.25 \ -.97)^2 + (-.97 \ -.70)^2 + (-.70 \ -.42)^2 + (-.42 \ -.14)^2 + (-.14 \ +.02)^2 + (.02 \ +.06)^2 + (.06 \ +.09)^2 + \frac{(.09 \ +0.1)^2}{2}\right] -(-.603)^2$$

$$S^2 = \frac{10}{380}\left[(-3.32)^2 + (-2.77)^2 + (-2.22)^2 + (-1.67)^2 + (-1.12)^2 + (-.56)^2 + (-.12)^2 + (.08)^2 + (.15)^2 + \frac{(.19)^2}{2}\right] -.3637$$

$$S^2 = \frac{10}{380}\left[11.022 + 7.673 + 4.928 + 2.789 + 1.254 + .314 + .014 + .006 + .023 + .018\right] - .3637$$

$$S^2 = \frac{10}{360}\left[28.041\right] - .3637$$

$$S^2 = .738 - .364$$

$$S^2 = \boxed{+.374}$$

FIGURE B-4

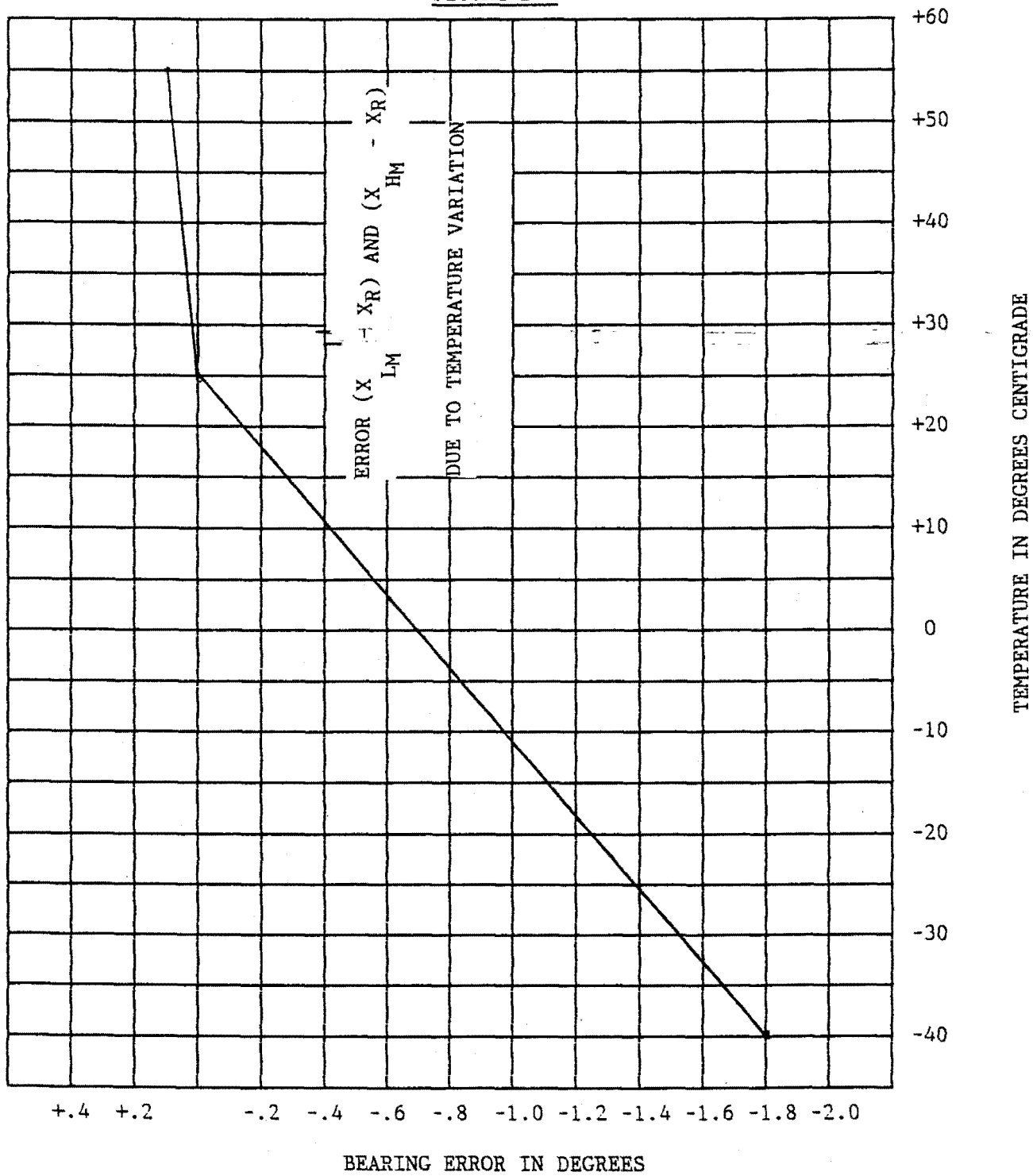
ERROR (X_{LM} + X_R) AND (X_{HM} - X_R)
DUE TO TEMPERATURE VARIATION
+60
+50
+40
+30
+20
+10
0
-10
-20
-30
-40
TEMPERATURE IN DEGREES CENTIGRADE
+.4 +.2 -.2 -.4 -.6 -.8 -1.0 -1.2 -1.4 -1.6 -1.8 -2.0
BEARING ERROR IN DEGREES

6.0 DERIVATION OF MEAN $\bar{X}$ AND VARIANCE S^2 OF BEARING ERROR WHEN RANDOM VARIABLES Y_i ARE NORMALLY DISTRIBUTED

6.1 Derivation of the Mean Bearing Error $\bar{X}$

The mean X of a discrete set of values X_1, X_2, ---, X_n is defined

$$\bar{X} = \frac{X_1 + X_2 + --- + X_n}{n} \tag{18}$$

If there is a probability associated with each of the discrete set of values, the mean is called a weighted mean and is defined as

$$\bar{X} = \frac{f_1 X_1 + f_2 X_2 + --- + f_n X_n}{f_1 + f_2 + --- + f_n} \tag{19}$$

where f_1 is the probability (area under the distribution curve of a random variable Y) associated with the value X_i.

In particular, if the random variable is normally distributed, the f_i's may be evaluated from a normal probability table with the location of X_i's corresponding to the midpoint of the intervals of the random variable. To clarify this, an example is furnished.

Let the discrete values of bearing error X_i correspond to integral multiples of σ of the random variable Y. Each interval is 1σ in length. See Figure B-5. The expression for the mean $\bar{X}$ is

$$\bar{X} = \frac{f_1 X_1 + f_2 X_2 + f_3 X_3 + f_4 X_4 + f_5 X_5 + f_6 X_6 + f_7 X_7}{f_1 + f_2 + f_3 + f_4 + f_5 + f_6 + f_7} \tag{20}$$

For this example, the area under the distribution curve between the limits of -3.5σ and -2.5σ is .006 (or 0.6%). This is the value assigned to f_1. Between the limits -2.5σ and -1.5σ the area under the distribution curve is .06 (or 6.0%). This is the value assigned to f_2. The remaining values are listed in Table B-4.

Equation (3) becomes

$$\bar{X} = \frac{0.6X_1 + 6.0X_2 + 24.4X_3 + 38.0X_4 + 24.4X_5 + 6.0X_6 + 0.6X_7}{100} \tag{21}$$

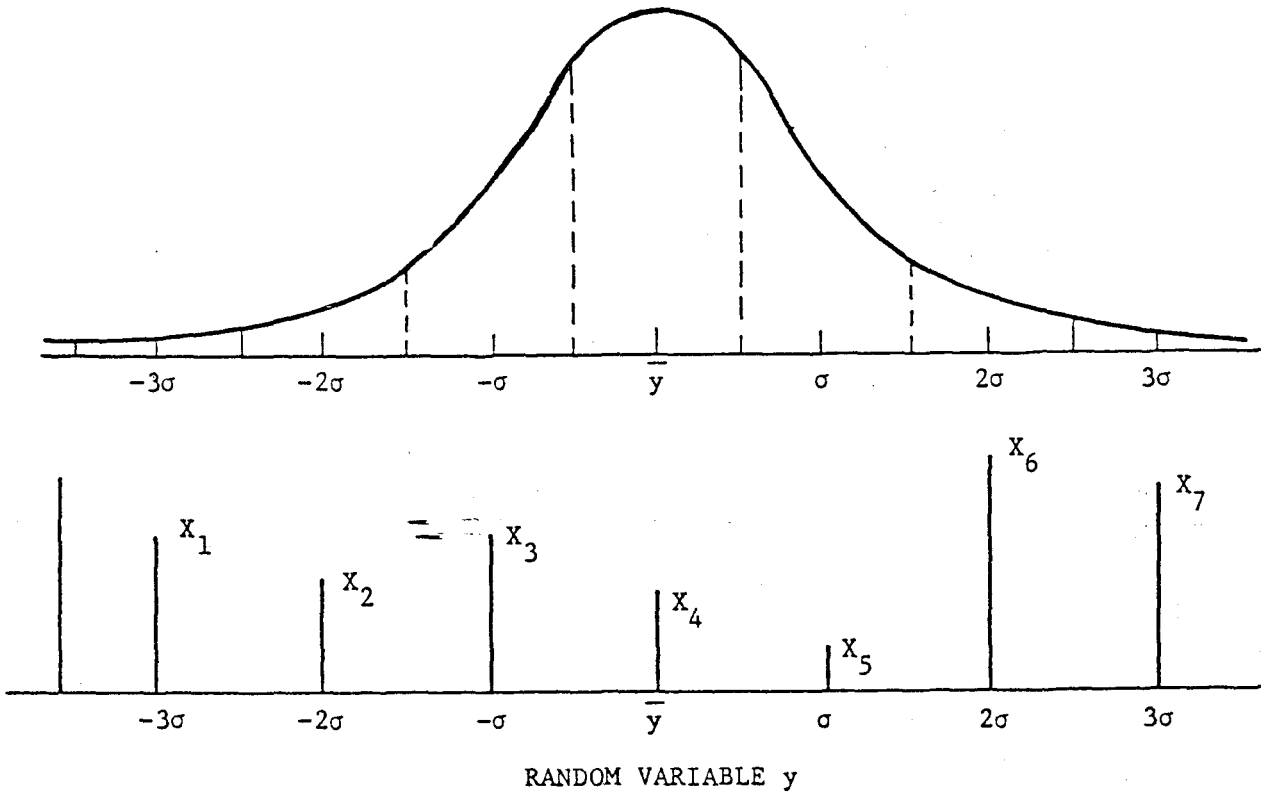

FIGURE B-5 WEIGHTING FACTOR APPLIED TO EACH BEARING ERROR X_i

TABLE B-4 CALCULATION OF WEIGHTING FACTOR f_i APPLIED TO EACH BEARING ERROR X_i

INTERVAL LIMITS-IN σ's	CLASS MIDPOINT	AREA UNDER DISTRIBUTION CURVE f_1 %
-3.5 to -2.5	-3σ	0.6
-2.5 to -1.5	-2σ	6.0
-1.5 to -0.5	-1	24.4
-0.5 to +0.5	$\bar{Y}$	38.0
+0.5 to +1.5	+1σ	24.4
+1.5 to 2.5	+2σ	6.0
+2.5 to 3.5	+3σ	0.6

If the value of X_i increases in magnitude linearly with variation of the random variable to the left or right of its mean, then equation (21) may be simplified. See Figure B-6.

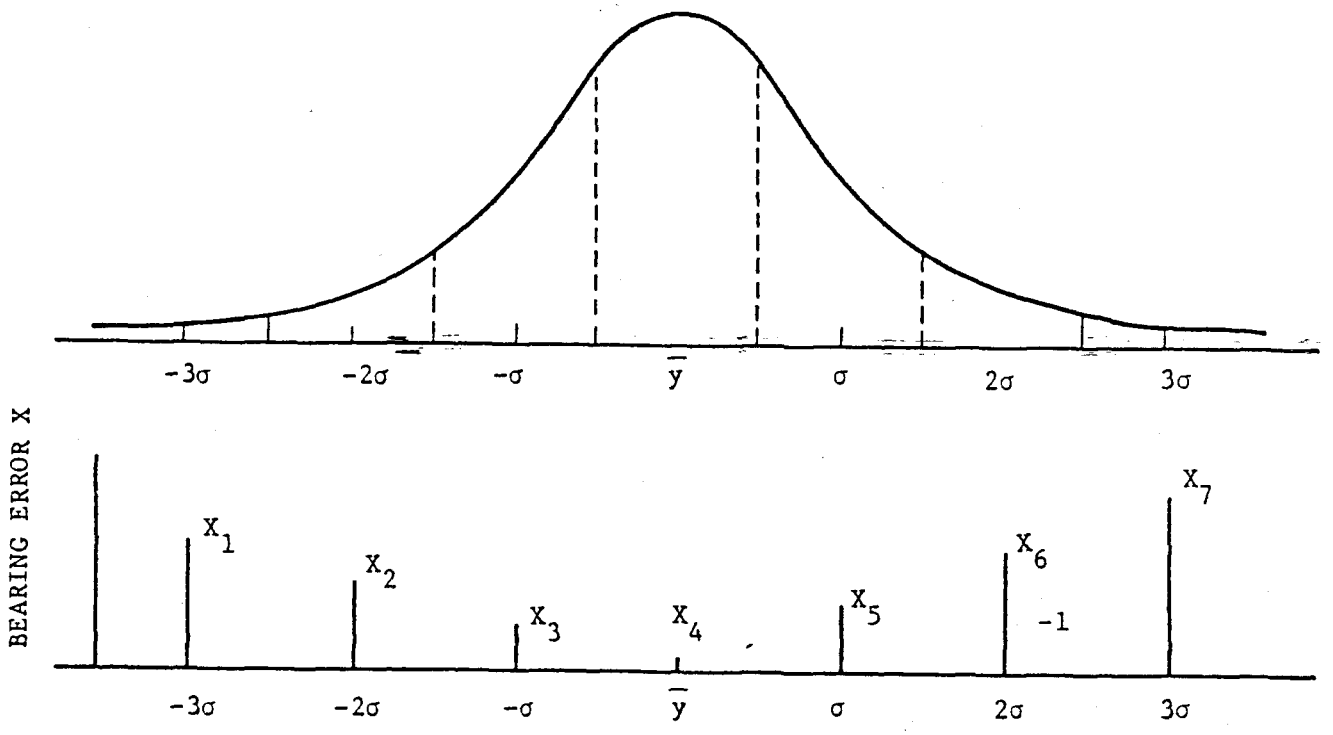

FIGURE B-6 WEIGHTING FACTOR APPLIED TO EACH BEARING ERROR X_i WHEN BEARING ERROR IS LINEARLY RELATED TO RANDOM VARIABLE y

With the condition of linearity, it is necessary to know only one value of X_1 to the right of the mean value, $\bar{Y}$, of the random variable and one value of X_1 to the left of the mean value, $\bar{Y}$, of the random variable. For convenience, the value of X_1 corresponding to $+3\sigma$ and -3σ of the random variable Y shall be chosen. When $Y = -3\sigma$, the bearing error will be X_1 in Figure B-6. This value X_1 also is designated X_L because it corresponds to the low value of the random variable. When $Y = +3\sigma$ the bearing error will be X_7 in Figure B-6. This value X_7 also is designated X_H corresponding to the high value of the random variable. When $\bar{Y} = -2\sigma$, $X_2 = (2/3)X_L$. Similarly, the other values are listed in Table B-5.

TABLE B-5 CALCULATION OF X_i IN TERMS OF X_L AND X_H

VARIABLE Y	BEARING ERROR X
-3σ	$X_1 = X_L$
-2σ	$X_2 = \frac{2}{3}X_L$
-1σ	$X_3 = \frac{1}{3}X_L$
$\bar{Y}$	$X_4 = 0$
$+1\sigma$	$X_5 = \frac{1}{3}X_H$
$+2\sigma$	$X_6 = \frac{2}{3}X_H$
$+3\sigma$	$X_7 = X_H$

Substituting these values of bearing error into equation (21)

$$\bar{X} = \frac{0.6X_L + 6.0(2/3)X_L + 24.4(1/3)X_H + 6.0(2/3)X_H + 0.6X_H}{100} \tag{22}$$

Factoring, the above equation reduces to

$$\bar{X} = \frac{(0.6 + 4.0 + 8.1)}{100}\left[X_L + X_H\right] \tag{23}$$

$$= .127\left[X_L + X_H\right]$$

The coefficient 0.127 is representative of the constant C used in equation (2).

The above procedure illustrates how the coefficient C is evaluated. A greater accuracy of the constant C is obtained by changing the interval lengths of the random variable Y from 1σ to $1/10\ \sigma$. With interval lengths of $1/10\ \sigma$, the value of C is .13306. This is the value that is used in equation (2).

6.2 Deviation of the Variance of Bearing Errors S^2

The variance of a discrete set of points X_1, X_2, ---, X_n is defined as

$$S^2 = \frac{\sum_{i=1}^{n} (X_i - \bar{X})^2}{n} = \frac{\sum_{i=1}^{n} X_i^2}{n} - \bar{X}^{2*} \tag{24}$$

If there is a probability associated with each of the discrete set of values X_1, X_2, ---, X_n, the variance is called a weighted variance. Similar to the weighted mean, the weighted variance is defined as

$$S^2 = \frac{\sum_{i=1}^{n} (X_i - \bar{X})^2 f_i}{\sum_{i=1}^{n} f_i} = \frac{\sum_{i=1}^{n} X_i^2 f_i}{\sum_{i=1}^{n} f_i} - \bar{X}^2 \tag{25}$$

where $\bar{X}$ is determined from equation (19).

In particular, if the random variable is normally distributed, the f_i's may be evaluated from a normal probability table with the location of X_i's corresponding to the midpoint of the intervals of the random variable.

Using the same example as used to derive equations (20) and (21) along with Figure B-5, expressions for the variance become

$$S^2 = \left[\frac{f_1X_1^2 + f_2X_2^2 + f_3X_3^2 + f_4X_4^2 + f_5X_5^2 + f_6X_6^2 + f_7X_7^2}{f_1 + f_2 + f_3 + f_4 + f_5 + f_6 + f_7}\right] - \bar{X}^2 \tag{26}$$

Applying the values of f_1 from Table B-4 equation (26) becomes

$$S^2 = \left[\frac{0.6X_1^2 + 6.0X_2^2 + 24.4X_3^2 + 38.0X_4^2 + 24.4X_5^2 + 6.0X_6^2 + 0.6X_7^2}{100}\right] - \bar{X}^2 \tag{27}$$

---

* The variance is also defined as

$$S^2 = \frac{\sum_{i=1}^{n} (X_i - \bar{X})^2}{n - 1}$$

This definition is called the unbiased estimate of S^2. If n is large, the error involved is small. Equation (24) will be used because n is large and simpler in form.

Since the condition of linearity between the random variable and bearing error prevails, equation (27) may be simplified in the same manner as equation (21) simplified to equation (22). Using Table B-5 and remembering to square the values in Table B-5, equation (27) becomes

$$S^2 = \frac{1}{100}\left[0.6X_L^2 + 6.0(4/9)X_L^2 + 24.4(1/9)X_L^2 + 24.4(1/9)X_H^2 + 6.0(4/9)X_H^2 + 0.6X_H^2\right] - \overline{X}^2 \tag{28}$$

Factoring the above expression

$$\begin{aligned} S^2 &= \frac{(0.6 + 2.7 + 2.7)}{100}\left[X_L^2 + X_H^2\right] - \overline{X}^2 \\ &= 0.06\left[X_L^2 + X_H^2\right] - \overline{X}^2 \end{aligned} \tag{29}$$

The coefficient 0.06 is representative of the constant K used in equation (2).

The above procedure illustrates how the coefficient K is evaluated. A greater accuracy of the constant K is obtained by changing the interval lengths of the random variable Y from 1σ to $1/10\ \sigma$. With interval lengths of $1/10\ \sigma$, the value of K is 0.05556. This is the value that is used in equation (3).

THIS PAGE INTENTIONALLY LEFT BLANK

7.0 DERIVATION OF MEAN $\bar{X}$ AND VARIANCE S^2 OF BEARING ERROR WHEN RANDOM VARIABLE IS RECTANGULARLY DISTRIBUTED

7.1 Derivation of Mean Bearing Error $\bar{X}$

General expressions for the mean and variance of bearing error shall be derived that will apply to all the temperature categories (A, B, C, D, E, and F) into which different VOR receivers are classified. An example using category C shall be derived.

The mean value, $\bar{X}$, of bearing error due to temperature variation is defined as:

$$\bar{X} = \frac{\sum_{i=1}^{n} X_i \, \Delta Y_i}{\sum_{i=1}^{h} \Delta Y_i} \tag{30}$$

where ΔY_i represents the ith interval of the random variable (temperature). $\Sigma \Delta Y_i$ is equal to the total temperature range (dependent upon the category.) X_i represents the average temperature over the interval of length ΔY_i. If the increments of temperature ΔY_i are assumed to be uniform for all i, equation (30) modifies to

$$\bar{X} = \frac{\Delta Y \sum_{i=1}^{n} X_i}{\text{Temperature Range in Degrees C}} \tag{31}$$

For purposes of laboratory measurement of bearing error due to temperature variation, X_i for all i is defined:

$$X_i = \frac{X_Y + X_{Y+\Delta Y}}{2} \tag{32}$$

where X_Y denotes the bearing error measured at temperature Y,
$X_Y + \Delta Y$ denotes the bearing error measured at temperature $Y + \Delta Y$.

Equation (31) now modifies to

$$\bar{X} = \frac{\Delta Y}{\sum_{i=1}^{n} Y} \left\{ \left[\frac{X_Y + X_{Y+\Delta Y}}{2} \right] + \left[\frac{X_{Y+\Delta Y} + X_{Y+2\Delta Y}}{2} \right] + \left[\frac{X_{Y+2\Delta Y} + X_{Y+3\Delta Y}}{2} \right] + \text{---} + \left[\frac{X_{Y+(n-2)\Delta Y} + X_{Y+(n-1)\Delta Y}}{2} \right] + \left[\frac{X_{Y+(n-1)\Delta Y} + X_{Y+(n-1)\Delta Y+\Delta Y/K}}{2} \right] \frac{1}{K} \right\} \tag{33}$$

Equation (33) now is a general expression for $\bar{X}$ applicable to all categories with Y corresponding to the lowest value of temperature. Note that equation (33) does not have weighting factors because the temperature distribution is rectangular. When the temperature range is an integral multiple of ΔY, K = 1. When the temperature range is not an integral multiple of ΔY, K > 1.

As an example, let equation (33) be applied to category C whose temperature range is -40 to +55 degrees C. Letting ΔY = 10 degrees C and Y = 40 degrees C equation (33) becomes

$$\bar{X}_c = \frac{10}{95}\left[\frac{X_{-40}+X_{-30}}{2} + \frac{X_{-30}+X_{-20}}{2} + \frac{X_{-20}+X_{-10}}{2} + \frac{X_{-10}+X_{0}}{2} + \frac{X_{0}+X_{+10}}{2} + \frac{X_{+10}+X_{+20}}{2} + \frac{X_{+20}+X_{+30}}{2} + \frac{X_{+30}+X_{+40}}{2} + \frac{X_{+40}+X_{+50}}{2} + \left(\frac{X_{+50}+X_{+50}+10/2}{2}\right)\frac{1}{2}\right] \tag{34}$$

Equation (34) simplifies to

$$\bar{X}_c = \frac{10}{95}\left[\frac{X_{-40}}{2} + X_{-30} + X_{-20} + X_{-10} + X_0 + X_{+10} + X_{+20} + X_{+30} + X_{+40} + \frac{3}{4}X_{+50} + \frac{1}{4}X_{+55}\right] \tag{35}$$

This is identical to equation (8). Equation (35) utilizes the laboratory data directly (with the standard condition error X_R subtracted out) to determine the mean bearing error $\bar{X}$ for Category C. The mean bearing errors of the other categories are derived as follows:

(1) Choose the proper value of temperature range.
(2) Let Y equal the lowest value of temperature in the range.
(3) Let ΔY = 10 degrees C.
(4) Choose the proper value of K.

If the bearing error is linear with respect to the variable, equation (30) becomes:

$$\bar{X} = \int_{Y_L}^{o} \frac{X_L}{Y_L}\frac{Y\,dY}{(Y_H-Y_L)} + \int_{o}^{Y_H} \frac{X_H}{Y_H}\frac{Y\,dY}{(Y_H-Y_L)} \tag{35A}$$

$$\bar{X} = \frac{X_L}{Y_L}\frac{Y^2}{2(Y_H-Y_L)}\Bigg|_{Y_L}^{o} + \frac{X_H}{Y_H}\frac{Y^2}{2(Y_H-Y_L)}\Bigg|_{o}^{Y_H} \tag{35B}$$

$$\bar{X} = \frac{Y_H X_H - Y_L X_L}{2(Y_H-Y_L)} \tag{35C}$$

This formula is simpler and easier to use than the formula developed above for the general case where bearing error is not necessarily linear.

7.2 Derivation of Variance of Bearing Error S^2

The variance, S^2, of a set of discrete measurements is defined as

$$S^2 = \frac{\sum_{i=1}^{n} X_i^2 \, \Delta Y_i}{\sum_{i=1}^{n} \Delta Y_i} - \overline{X}^2 \tag{36}$$

where X_i, ΔY_i, and $\Sigma \Delta Y_i$ are defined the same as for equation (30). Using the value of equation (30) for X_i and letting all ΔY_i be equal, equation (36) modifies to

$$S^2 = \frac{\Delta Y}{\sum_{i=1}^{n} \Delta Y} \left\{ \left[\frac{X_Y + X_{Y+\Delta Y}}{2} \right]^2 + \left[\frac{X_{Y+\Delta Y} + X_{Y+2\Delta Y}}{2} \right]^2 + \cdots + \left[\frac{X_{Y+(n-2)\Delta Y} + X_{Y+(n-1)\Delta Y}}{2} \right]^2 + \left[\frac{X_{Y+(n-1)\Delta Y} + X_{Y+(n-1)+\Delta Y/K}}{2} \right]^2 \right\} \frac{1}{K} - \overline{X}^2 \tag{37}$$

$$S^2 = \frac{\Delta Y}{4 \sum_{i=1}^{n} \Delta Y} \left\{ (X_Y + X_{Y+\Delta Y})^2 + (X_{Y+\Delta Y} + X_{Y+2\Delta Y})^2 + \cdots + (X_{Y+(n-2)\Delta Y} + X_{Y+(n-1)\Delta Y})^2 + (X_{Y+(n-1)\Delta Y} + X_{Y+(n-1)\Delta Y} + \Delta Y/K)^2 \frac{1}{K} \right\} - \overline{X}^2 \tag{38}$$

Equation (38) is the equation for the variance of bearing error and is applicable to all temperature categories.

As an example, consider category C. The temperature range is 95 degrees C, the temperature increments, ΔY, are 10 degrees C, $Y = -40$ degrees C, and $K = 2$. Using these values in equation (38) results in the following expression for the variance of bearing error for category C.

$$S_c^2 = \frac{10}{4x95} \Big[(X_{-40} + X_{-30})^2 + (X_{-30} + X_{-20})^2 + (X_{-20} + X_{-10})^2 + (X_{-10} + X_0)^2 + (X_0 + X_{+10})^2 + (X_{+10} + X_{+20})^2 + (X_{+20} + X_{+30})^2 + (X_{+30} + X_{+40})^2 + (X_{+40} + X_{+50})^2 + \frac{(X_{+50} + X_{+55})^2}{2} \Big] - \bar{X}_c^2 \qquad (39)$$

Equation (39) is identical to equation (9). Once again the derivation of the variance for the other categories can be determined by choosing the proper values of temperature range, Y, ΔY, and K.

If the bearing error is linear with respect to the variable, equation (36) becomes:

$$S^2 = \frac{\int_{Y_L}^{o} \left(\frac{X_{LY}}{Y_L}\right)^2 dY + \int_{o}^{Y_H} \left(\frac{X_{HY}}{Y_H}\right)^2 dY}{Y_H - Y_L} - \bar{X}^2 \qquad (40A)$$

$$S^2 = \frac{\frac{X_L^2}{Y_L^2} \frac{Y^3}{3} \Big|_{Y_L}^{o} + \frac{X_H^2}{Y_H^2} \frac{Y^3}{3} \Big|_{o}^{Y_H}}{Y_H - Y_L} - \bar{X}^2 \qquad (40B)$$

$$S^2 = \frac{X_H^2 Y_H - X_L^2 Y_L}{3(Y_H - Y_L)} - \bar{X}^2 \qquad (40C)$$

This formula is simpler and easier to use than the formula developed above for the general case where the bearing error is not necessarily linear.

APPENDIX B
PAGE 31 - PANEL 1 of 3

x_L \ x_H	0.0	0.1	0.2	0.3	0.4	0.5	0.6	0.7	0.8	0.9	1.0	1.1	1.2
0.0	0.0000	0.0133	0.0266	0.0399	0.0532	0.0665	0.0798	0.0931	0.1064	0.1198	0.1331	0.1464	0.1597
0.1	0.0133	0.0266	0.0399	0.0532	0.0665	0.0798	0.0931	0.1064	0.1198	0.1331	0.1464	0.1597	0.1730
0.2	0.0266	0.0399	0.0532	0.0665	0.0798	0.0931	0.1064	0.1198	0.1331	0.1464	0.1597	0.1730	0.1863
0.3	0.0399	0.0532	0.0665	0.0798	0.0931	0.1064	0.1198	0.1331	0.1464	0.1597	0.1730	0.1863	0.1996
0.4	0.0532	0.0665	0.0798	0.0931	0.1064	0.1198	0.1331	0.1464	0.1597	0.1730	0.1863	0.1996	0.2129
0.5	0.0665	0.0798	0.0931	0.1064	0.1198	0.1331	0.1464	0.1597	0.1730	0.1863	0.1996	0.2129	0.2262
0.6	0.0798	0.0931	0.1064	0.1198	0.1331	0.1464	0.1597	0.1730	0.1863	0.1996	0.2129	0.2262	0.2395
0.7	0.0931	0.1064	0.1198	0.1331	0.1464	0.1597	0.1730	0.1863	0.1996	0.2129	0.2262	0.2395	0.2528
0.8	0.1064	0.1198	0.1331	0.1464	0.1597	0.1730	0.1863	0.1996	0.2129	0.2262	0.2395	0.2528	0.2661
0.9	0.1198	0.1331	0.1464	0.1597	0.1730	0.1863	0.1996	0.2129	0.2262	0.2395	0.2528	0.2661	0.2794
1.0	0.1331	0.1464	0.1597	0.1730	0.1863	0.1996	0.2129	0.2262	0.2395	0.2528	0.2661	0.2794	0.2927
1.1	0.1464	0.1597	0.1730	0.1863	0.1996	0.2129	0.2262	0.2395	0.2528	0.2661	0.2794	0.2927	0.3060
1.2	0.1597	0.1730	0.1863	0.1996	0.2129	0.2262	0.2395	0.2528	0.2661	0.2794	0.2927	0.3060	0.3193
1.3	0.1730	0.1863	0.1996	0.2129	0.2262	0.2395	0.2528	0.2661	0.2794	0.2927	0.3060	0.3193	0.3327
1.4	0.1863	0.1996	0.2129	0.2262	0.2395	0.2528	0.2661	0.2794	0.2927	0.3060	0.3193	0.3327	0.3460
1.5	0.1996	0.2129	0.2262	0.2395	0.2528	0.2661	0.2794	0.2927	0.3060	0.3193	0.3327	0.3460	0.3593
1.6	0.2129	0.2262	0.2395	0.2528	0.2661	0.2794	0.2927	0.3060	0.3193	0.3327	0.3460	0.3593	0.3726
1.7	0.2262	0.2395	0.2528	0.2661	0.2794	0.2927	0.3060	0.3193	0.3327	0.3460	0.3593	0.3726	0.3859
1.8	0.2395	0.2528	0.2661	0.2794	0.2927	0.3060	0.3193	0.3327	0.3460	0.3593	0.3726	0.3859	0.3992
1.9	0.2528	0.2661	0.2794	0.2927	0.3060	0.3193	0.3327	0.3460	0.3593	0.3726	0.3859	0.3992	0.4125
2.0	0.2661	0.2794	0.2927	0.3060	0.3193	0.3327	0.3460	0.3593	0.3726	0.3859	0.3992	0.4125	0.4258
2.1	0.2794	0.2927	0.3060	0.3193	0.3327	0.3460	0.3593	0.3726	0.3859	0.3992	0.4125	0.4258	0.4391
2.2	0.2927	0.3060	0.3193	0.3327	0.3460	0.3593	0.3726	0.3859	0.3992	0.4125	0.4258	0.4391	0.4524
2.3	0.3060	0.3193	0.3327	0.3460	0.3593	0.3726	0.3859	0.3992	0.4125	0.4258	0.4391	0.4524	0.4657
2.4	0.3193	0.3327	0.3460	0.3593	0.3726	0.3859	0.3992	0.4125	0.4258	0.4391	0.4524	0.4657	0.4790
2.5	0.3327	0.3460	0.3593	0.3726	0.3859	0.3992	0.4125	0.4258	0.4391	0.4524	0.4657	0.4790	0.4923
2.6	0.3460	0.3593	0.3726	0.3859	0.3992	0.4125	0.4258	0.4391	0.4524	0.4657	0.4790	0.4923	0.5056
2.7	0.3593	0.3726	0.3859	0.3992	0.4125	0.4258	0.4391	0.4524	0.4657	0.4790	0.4923	0.5056	0.5189
2.8	0.3726	0.3859	0.3992	0.4125	0.4258	0.4391	0.4524	0.4657	0.4790	0.4923	0.5056	0.5189	0.5322
2.9	0.3859	0.3992	0.4125	0.4258	0.4391	0.4524	0.4657	0.4790	0.4923	0.5056	0.5189	0.5322	0.5455
3.0	0.3992	0.4125	0.4258	0.4391	0.4524	0.4657	0.4790	0.4923	0.5056	0.5189	0.5322	0.5455	0.5589
3.2	0.4258	0.4391	0.4524	0.4657	0.4790	0.4923	0.5056	0.5189	0.5322	0.5455	0.5589	0.5722	0.5855
3.4	0.4524	0.4657	0.4790	0.4923	0.5056	0.5189	0.5322	0.5455	0.5589	0.5722	0.5855	0.5988	0.6121
3.6	0.4790	0.4923	0.5056	0.5189	0.5322	0.5455	0.5589	0.5722	0.5855	0.5988	0.6121	0.6254	0.6387
3.8	0.5056	0.5189	0.5322	0.5455	0.5589	0.5722	0.5855	0.5988	0.6121	0.6254	0.6387	0.6520	0.6653
4.0	0.5322	0.5455	0.5589	0.5722	0.5855	0.5988	0.6121	0.6254	0.6387	0.6520	0.6653	0.6786	0.6919
4.2	0.5589	0.5722	0.5855	0.5988	0.6121	0.6254	0.6387	0.6520	0.6653	0.6786	0.6919	0.7052	0.7185
4.4	0.5855	0.5988	0.6121	0.6254	0.6387	0.6520	0.6653	0.6786	0.6919	0.7052	0.7185	0.7318	0.7451
4.6	0.6121	0.6254	0.6387	0.6520	0.6653	0.6786	0.6919	0.7052	0.7185	0.7318	0.7451	0.7584	0.7717
4.8	0.6387	0.6520	0.6653	0.6786	0.6919	0.7052	0.7185	0.7318	0.7451	0.7584	0.7717	0.7851	0.7984
5.0	0.6653	0.6786	0.6919	0.7052	0.7185	0.7318	0.7451	0.7584	0.7717	0.7851	0.7984	0.8117	0.8250
5.2	0.6919	0.7052	0.7185	0.7318	0.7451	0.7584	0.7717	0.7851	0.7984	0.8117	0.8250	0.8383	0.8516
5.4	0.7185	0.7318	0.7451	0.7584	0.7717	0.7851	0.7984	0.8117	0.8250	0.8383	0.8516	0.8649	0.8782
5.6	0.7451	0.7584	0.7717	0.7851	0.7984	0.8117	0.8250	0.8383	0.8516	0.8649	0.8782	0.8915	0.9048
5.8	0.7717	0.7851	0.7984	0.8117	0.8250	0.8383	0.8516	0.8649	0.8782	0.8915	0.9048	0.9181	0.9314
6.0	0.7984	0.8117	0.8250	0.8383	0.8516	0.8649	0.8782	0.8915	0.9048	0.9181	0.9314	0.9447	0.9580

APPENDIX B
PAGE 31 - PANEL 2 of 3

TABLE B-6A. MEAN BEARING ERROR, $\overline{X}$ - QUADRANT I

1.3	1.4	1.5	1.6	1.7	1.8	1.9	2.0	2.1	2.2	2.3	2.4	2.5	2.6	2.7	2.8	2.9	3.0	3.2	3.4
0.1730	0.1863	0.1996	0.2129	0.2262	0.2395	0.2528	0.2661	0.2794	0.2927	0.3060	0.3193	0.3327	0.3460	0.3593	0.3726	0.3859	0.3992	0.4258	0.4524
0.1863	0.1996	0.2129	0.2262	0.2395	0.2528	0.2661	0.2794	0.2927	0.3060	0.3193	0.3327	0.3460	0.3593	0.3726	0.3859	0.3992	0.4125	0.4391	0.4657
0.1996	0.2129	0.2262	0.2395	0.2528	0.2661	0.2794	0.2927	0.3060	0.3193	0.3327	0.3460	0.3593	0.3726	0.3859	0.3992	0.4125	0.4258	0.4524	0.4790
0.2129	0.2262	0.2395	0.2528	0.2661	0.2794	0.2927	0.3060	0.3193	0.3327	0.3460	0.3593	0.3726	0.3859	0.3992	0.4125	0.4258	0.4391	0.4657	0.4923
0.2262	0.2395	0.2528	0.2661	0.2794	0.2927	0.3060	0.3193	0.3327	0.3460	0.3593	0.3726	0.3859	0.3992	0.4125	0.4258	0.4391	0.4524	0.4790	0.5056
0.2395	0.2528	0.2661	0.2794	0.2927	0.3060	0.3193	0.3327	0.3460	0.3593	0.3726	0.3859	0.3992	0.4125	0.4258	0.4391	0.4524	0.4657	0.4923	0.5189
0.2528	0.2661	0.2794	0.2927	0.3060	0.3193	0.3327	0.3460	0.3593	0.3726	0.3859	0.3992	0.4125	0.4258	0.4391	0.4524	0.4657	0.4790	0.5056	0.5322
0.2661	0.2794	0.2927	0.3060	0.3193	0.3327	0.3460	0.3593	0.3726	0.3859	0.3992	0.4125	0.4258	0.4391	0.4524	0.4657	0.4790	0.4923	0.5189	0.5455
0.2794	0.2927	0.3060	0.3193	0.3327	0.3460	0.3593	0.3726	0.3859	0.3992	0.4125	0.4258	0.4391	0.4524	0.4657	0.4790	0.4923	0.5056	0.5322	0.5589
0.2927	0.3060	0.3193	0.3327	0.3460	0.3593	0.3726	0.3859	0.3992	0.4125	0.4258	0.4391	0.4524	0.4657	0.4790	0.4923	0.5056	0.5189	0.5455	0.5722
0.3060	0.3193	0.3327	0.3460	0.3593	0.3726	0.3859	0.3992	0.4125	0.4258	0.4391	0.4524	0.4657	0.4790	0.4923	0.5056	0.5189	0.5322	0.5589	0.5855
0.3193	0.3327	0.3460	0.3593	0.3726	0.3859	0.3992	0.4125	0.4258	0.4391	0.4524	0.4657	0.4790	0.4923	0.5056	0.5189	0.5322	0.5455	0.5722	0.5988
0.3327	0.3460	0.3593	0.3726	0.3859	0.3992	0.4125	0.4258	0.4391	0.4524	0.4657	0.4790	0.4923	0.5056	0.5189	0.5322	0.5455	0.5589	0.5855	0.6121
0.3460	0.3593	0.3726	0.3859	0.3992	0.4125	0.4258	0.4391	0.4524	0.4657	0.4790	0.4923	0.5056	0.5189	0.5322	0.5455	0.5589	0.5722	0.5988	0.6254
0.3593	0.3726	0.3859	0.3992	0.4125	0.4258	0.4391	0.4524	0.4657	0.4790	0.4923	0.5056	0.5189	0.5322	0.5455	0.5589	0.5722	0.5855	0.6121	0.6387
0.3726	0.3859	0.3992	0.4125	0.4258	0.4391	0.4524	0.4657	0.4790	0.4923	0.5056	0.5189	0.5322	0.5455	0.5589	0.5722	0.5855	0.5988	0.6254	0.6520
0.3859	0.3992	0.4125	0.4258	0.4391	0.4524	0.4657	0.4790	0.4923	0.5056	0.5189	0.5322	0.5455	0.5589	0.5722	0.5855	0.5988	0.6121	0.6387	0.6653
0.3992	0.4125	0.4258	0.4391	0.4524	0.4657	0.4790	0.4923	0.5056	0.5189	0.5322	0.5455	0.5589	0.5722	0.5855	0.5988	0.6121	0.6254	0.6520	0.6786
0.4125	0.4258	0.4391	0.4524	0.4657	0.4790	0.4923	0.5056	0.5189	0.5322	0.5455	0.5589	0.5722	0.5855	0.5988	0.6121	0.6254	0.6387	0.6653	0.6919
0.4258	0.4391	0.4524	0.4657	0.4790	0.4923	0.5056	0.5189	0.5322	0.5455	0.5589	0.5722	0.5855	0.5988	0.6121	0.6254	0.6387	0.6520	0.6786	0.7052
0.4391	0.4524	0.4657	0.4790	0.4923	0.5056	0.5189	0.5322	0.5455	0.5589	0.5722	0.5855	0.5988	0.6121	0.6254	0.6387	0.6520	0.6653	0.6919	0.7185
0.4524	0.4657	0.4790	0.4923	0.5056	0.5189	0.5322	0.5455	0.5589	0.5722	0.5855	0.5988	0.6121	0.6254	0.6387	0.6520	0.6653	0.6786	0.7052	0.7318
0.4657	0.4790	0.4923	0.5056	0.5189	0.5322	0.5455	0.5589	0.5722	0.5855	0.5988	0.6121	0.6254	0.6387	0.6520	0.6653	0.6786	0.6919	0.7185	0.7451
0.4790	0.4923	0.5056	0.5189	0.5322	0.5455	0.5589	0.5722	0.5855	0.5988	0.6121	0.6254	0.6387	0.6520	0.6653	0.6786	0.6919	0.7052	0.7318	0.7584
0.4923	0.5056	0.5189	0.5322	0.5455	0.5589	0.5722	0.5855	0.5988	0.6121	0.6254	0.6387	0.6520	0.6653	0.6786	0.6919	0.7052	0.7185	0.7451	0.7717
0.5056	0.5189	0.5322	0.5455	0.5589	0.5722	0.5855	0.5988	0.6121	0.6254	0.6387	0.6520	0.6653	0.6786	0.6919	0.7052	0.7185	0.7318	0.7584	0.7851
0.5189	0.5322	0.5455	0.5589	0.5722	0.5855	0.5988	0.6121	0.6254	0.6387	0.6520	0.6653	0.6786	0.6919	0.7052	0.7185	0.7318	0.7451	0.7717	0.7984
0.5322	0.5455	0.5589	0.5722	0.5855	0.5988	0.6121	0.6254	0.6387	0.6520	0.6653	0.6786	0.6919	0.7052	0.7185	0.7318	0.7451	0.7584	0.7851	0.8117
0.5455	0.5589	0.5722	0.5855	0.5988	0.6121	0.6254	0.6387	0.6520	0.6653	0.6786	0.6919	0.7052	0.7185	0.7318	0.7451	0.7584	0.7717	0.7984	0.8250
0.5589	0.5722	0.5855	0.5988	0.6121	0.6254	0.6387	0.6520	0.6653	0.6786	0.6919	0.7052	0.7185	0.7318	0.7451	0.7584	0.7717	0.7851	0.8117	0.8383
0.5722	0.5855	0.5988	0.6121	0.6254	0.6387	0.6520	0.6653	0.6786	0.6919	0.7052	0.7185	0.7318	0.7451	0.7584	0.7717	0.7851	0.7984	0.8250	0.8516
0.5988	0.6121	0.6254	0.6387	0.6520	0.6653	0.6786	0.6919	0.7052	0.7185	0.7318	0.7451	0.7584	0.7717	0.7851	0.7984	0.8117	0.8250	0.8516	0.8782
0.6254	0.6387	0.6520	0.6653	0.6786	0.6919	0.7052	0.7185	0.7318	0.7451	0.7584	0.7717	0.7851	0.7984	0.8117	0.8250	0.8383	0.8516	0.8782	0.9048
0.6520	0.6653	0.6786	0.6919	0.7052	0.7185	0.7318	0.7451	0.7584	0.7717	0.7851	0.7984	0.8117	0.8250	0.8383	0.8516	0.8649	0.8782	0.9048	0.9314
0.6786	0.6919	0.7052	0.7185	0.7318	0.7451	0.7584	0.7717	0.7851	0.7984	0.8117	0.8250	0.8383	0.8516	0.8649	0.8782	0.8915	0.9048	0.9314	0.9580
0.7052	0.7185	0.7318	0.7451	0.7584	0.7717	0.7851	0.7984	0.8117	0.8250	0.8383	0.8516	0.8649	0.8782	0.8915	0.9048	0.9181	0.9314	0.9580	0.9846
0.7318	0.7451	0.7584	0.7717	0.7851	0.7984	0.8117	0.8250	0.8383	0.8516	0.8649	0.8782	0.8915	0.9048	0.9181	0.9314	0.9447	0.9580	0.9846	1.0113
0.7584	0.7717	0.7851	0.7984	0.8117	0.8250	0.8383	0.8516	0.8649	0.8782	0.8915	0.9048	0.9181	0.9314	0.9447	0.9580	0.9713	0.9846	1.0113	1.0379
0.7851	0.7984	0.8117	0.8250	0.8383	0.8516	0.8649	0.8782	0.8915	0.9048	0.9181	0.9314	0.9447	0.9580	0.9713	0.9846	0.9980	1.0113	1.0379	1.0645
0.8117	0.8250	0.8383	0.8516	0.8649	0.8782	0.8915	0.9048	0.9181	0.9314	0.9447	0.9580	0.9713	0.9846	0.9980	1.0113	1.0246	1.0379	1.0645	1.0911
0.8383	0.8516	0.8649	0.8782	0.8915	0.9048	0.9181	0.9314	0.9447	0.9580	0.9713	0.9846	0.9980	1.0113	1.0246	1.0379	1.0512	1.0645	1.0911	1.1177
0.8649	0.8782	0.8915	0.9048	0.9181	0.9314	0.9447	0.9580	0.9713	0.9846	0.9980	1.0113	1.0246	1.0379	1.0512	1.0645	1.0778	1.0911	1.1177	1.1443
0.8915	0.9048	0.9181	0.9314	0.9447	0.9580	0.9713	0.9846	0.9980	1.0113	1.0246	1.0379	1.0512	1.0645	1.0778	1.0911	1.1044	1.1177	1.1443	1.1709
0.9181	0.9314	0.9447	0.9580	0.9713	0.9846	0.9980	1.0113	1.0246	1.0379	1.0512	1.0645	1.0778	1.0911	1.1044	1.1177	1.1310	1.1443	1.1709	1.1975
0.9447	0.9580	0.9713	0.9846	0.9980	1.0113	1.0246	1.0379	1.0512	1.0645	1.0778	1.0911	1.1044	1.1177	1.1310	1.1443	1.1576	1.1709	1.1975	1.2242
0.9713	0.9846	0.9980	1.0113	1.0246	1.0379	1.0512	1.0645	1.0778	1.0911	1.1044	1.1177	1.1310	1.1443	1.1576	1.1709	1.1842	1.1975	1.2242	1.2508

PANEL – 3 of 3

3.6	3.8	4.0	4.2	4.4	4.6	4.8	5.0	5.2	5.4	5.6	5.8	6.0	x_M / x_L
0.4790	0.5056	0.5322	0.5589	0.5855	0.6121	0.6387	0.6653	0.6919	0.7185	0.7451	0.7717	0.7984	0.0
0.4723	0.5189	0.5455	0.5722	0.5988	0.6254	0.6520	0.6786	0.7052	0.7318	0.7584	0.7851	0.8117	0.1
0.5056	0.5322	0.5589	0.5855	0.6121	0.6387	0.6653	0.6919	0.7185	0.7451	0.7717	0.7984	0.8250	0.2
0.5189	0.5455	0.5722	0.5988	0.6254	0.6520	0.6786	0.7052	0.7318	0.7584	0.7851	0.8117	0.8383	0.3
0.5322	0.5589	0.5855	0.6121	0.6387	0.6653	0.6919	0.7185	0.7451	0.7717	0.7984	0.8250	0.8516	0.4
0.5455	0.5722	0.5988	0.6254	0.6520	0.6786	0.7052	0.7318	0.7584	0.7851	0.8117	0.8383	0.8649	0.5
0.5589	0.5855	0.6121	0.6387	0.6653	0.6919	0.7185	0.7451	0.7717	0.7984	0.8250	0.8516	0.8782	0.6
0.5722	0.5988	0.6254	0.6520	0.6786	0.7052	0.7318	0.7584	0.7851	0.8117	0.8383	0.8649	0.8915	0.7
0.5855	0.6121	0.6387	0.6653	0.6919	0.7185	0.7451	0.7717	0.7984	0.8250	0.8516	0.8782	0.9048	0.8
0.5988	0.6254	0.6520	0.6786	0.7052	0.7318	0.7584	0.7851	0.8117	0.8383	0.8649	0.8915	0.9181	0.9
0.6121	0.6387	0.6653	0.6919	0.7185	0.7451	0.7717	0.7984	0.8250	0.8516	0.8782	0.9048	0.9314	1.0
0.6254	0.6520	0.6786	0.7052	0.7318	0.7584	0.7851	0.8117	0.8383	0.8649	0.8915	0.9181	0.9447	1.1
0.6387	0.6653	0.6919	0.7185	0.7451	0.7717	0.7984	0.8250	0.8516	0.8782	0.9048	0.9314	0.9580	1.2
0.6520	0.6786	0.7052	0.7318	0.7584	0.7851	0.8117	0.8383	0.8649	0.8915	0.9181	0.9447	0.9713	1.3
0.6653	0.6919	0.7185	0.7451	0.7717	0.7984	0.8250	0.8516	0.8782	0.9048	0.9314	0.9580	0.9846	1.4
0.6786	0.7052	0.7318	0.7584	0.7851	0.8117	0.8383	0.8649	0.8915	0.9181	0.9447	0.9713	0.9980	1.5
0.6919	0.7185	0.7451	0.7717	0.7984	0.8250	0.8516	0.8782	0.9048	0.9314	0.9580	0.9846	1.0113	1.6
0.7052	0.7318	0.7584	0.7851	0.8117	0.8383	0.8649	0.8915	0.9181	0.9447	0.9713	0.9980	1.0246	1.7
0.7185	0.7451	0.7717	0.7984	0.8250	0.8516	0.8782	0.9048	0.9314	0.9580	0.9846	1.0113	1.0379	1.8
0.7318	0.7584	0.7851	0.8117	0.8383	0.8649	0.8915	0.9181	0.9447	0.9713	0.9980	1.0246	1.0512	1.9
0.7451	0.7717	0.7984	0.8250	0.8516	0.8782	0.9048	0.9314	0.9580	0.9846	1.0113	1.0379	1.0645	2.0
0.7584	0.7851	0.8117	0.8383	0.8649	0.8915	0.9181	0.9447	0.9713	0.9980	1.0246	1.0512	1.0778	2.1
0.7717	0.7984	0.8250	0.8516	0.8782	0.9048	0.9314	0.9580	0.9846	1.0113	1.0379	1.0645	1.0911	2.2
0.7851	0.8117	0.8383	0.8649	0.8915	0.9181	0.9447	0.9713	0.9980	1.0246	1.0512	1.0778	1.1044	2.3
0.7984	0.8250	0.8516	0.8782	0.9048	0.9314	0.9580	0.9846	1.0113	1.0379	1.0645	1.0911	1.1177	2.4
0.8117	0.8383	0.8649	0.8915	0.9181	0.9447	0.9713	0.9980	1.0246	1.0512	1.0778	1.1044	1.1310	2.5
0.8250	0.8516	0.8782	0.9048	0.9314	0.9580	0.9846	1.0113	1.0379	1.0645	1.0911	1.1177	1.1443	2.6
0.8383	0.8649	0.8915	0.9181	0.9447	0.9713	0.9980	1.0246	1.0512	1.0778	1.1044	1.1310	1.1576	2.7
0.8516	0.8782	0.9048	0.9314	0.9580	0.9846	1.0113	1.0379	1.0645	1.0911	1.1177	1.1443	1.1709	2.8
0.8649	0.8915	0.9181	0.9447	0.9713	0.9980	1.0246	1.0512	1.0778	1.1044	1.1310	1.1576	1.1842	2.9
0.8782	0.9048	0.9314	0.9580	0.9846	1.0113	1.0379	1.0645	1.0911	1.1177	1.1443	1.1709	1.1975	3.0
0.9048	0.9314	0.9580	0.9846	1.0113	1.0379	1.0645	1.0911	1.1177	1.1443	1.1709	1.1975	1.2242	3.2
0.9314	0.9580	0.9846	1.0113	1.0379	1.0645	1.0911	1.1177	1.1443	1.1709	1.1975	1.2242	1.2508	3.4
0.9580	0.9846	1.0113	1.0379	1.0645	1.0911	1.1177	1.1443	1.1709	1.1975	1.2242	1.2508	1.2774	3.6
0.9846	1.0113	1.0379	1.0645	1.0911	1.1177	1.1443	1.1709	1.1975	1.2242	1.2508	1.2774	1.3040	3.8
1.0113	1.0379	1.0645	1.0911	1.1177	1.1443	1.1709	1.1975	1.2242	1.2508	1.2774	1.3040	1.3306	4.0
1.0379	1.0645	1.0911	1.1177	1.1443	1.1709	1.1975	1.2242	1.2508	1.2774	1.3040	1.3306	1.3572	4.2
1.0645	1.0911	1.1177	1.1443	1.1709	1.1975	1.2242	1.2508	1.2774	1.3040	1.3306	1.3572	1.3838	4.4
1.0911	1.1177	1.1443	1.1709	1.1975	1.2242	1.2508	1.2774	1.3040	1.3306	1.3572	1.3838	1.4104	4.6
1.1177	1.1443	1.1709	1.1975	1.2242	1.2508	1.2774	1.3040	1.3306	1.3572	1.3838	1.4104	1.4370	4.8
1.1443	1.1709	1.1975	1.2242	1.2508	1.2774	1.3040	1.3306	1.3572	1.3838	1.4104	1.4370	1.4637	5.0
1.1709	1.1975	1.2242	1.2508	1.2774	1.3040	1.3306	1.3572	1.3838	1.4104	1.4370	1.4637	1.4903	5.2
1.1975	1.2242	1.2508	1.2774	1.3040	1.3306	1.3572	1.3838	1.4104	1.4370	1.4637	1.4903	1.5169	5.4
1.2242	1.2508	1.2774	1.3040	1.3306	1.3572	1.3838	1.4104	1.4370	1.4637	1.4903	1.5169	1.5435	5.6
1.2508	1.2774	1.3040	1.3306	1.3572	1.3838	1.4104	1.4370	1.4637	1.4903	1.5169	1.5435	1.5701	5.8
1.2774	1.3040	1.3306	1.3572	1.3838	1.4104	1.4370	1.4637	1.4903	1.5169	1.5435	1.5701	1.5967	6.0

PANEL 1 of 3

x_H	0.0	−0.1	−0.2	−0.3	−0.4	−0.5	−0.6	−0.7	−0.8	−0.9	−1.0	−1.1	−1.2	−1.3
x_L														
0.0	0.0000	−0.0133	−0.0266	−0.0399	−0.0532	−0.0665	−0.0798	−0.0931	−0.1064	−0.1198	−0.1331	−0.1464	−0.1597	−0.1730
0.1	0.0133	0.0000	−0.0133	−0.0266	−0.0399	−0.0532	−0.0665	−0.0798	−0.0931	−0.1064	−0.1198	−0.1331	−0.1464	−0.1597
0.2	0.0266	0.0133	0.0000	−0.0133	−0.0266	−0.0399	−0.0532	−0.0665	−0.0798	−0.0931	−0.1064	−0.1198	−0.1331	−0.1464
0.3	0.0399	0.0266	0.0133	0.0000	−0.0133	−0.0266	−0.0399	−0.0532	−0.0665	−0.0798	−0.0931	−0.1064	−0.1198	−0.1331
0.4	0.0532	0.0399	0.0266	0.0133	0.0000	−0.0133	−0.0266	−0.0399	−0.0532	−0.0665	−0.0798	−0.0931	−0.1064	−0.1198
0.5	0.0665	0.0532	0.0399	0.0266	0.0133	0.0000	−0.0133	−0.0266	−0.0399	−0.0532	−0.0665	−0.0798	−0.0931	−0.1064
0.6	0.0798	0.0665	0.0532	0.0399	0.0266	0.0133	0.0000	−0.0133	−0.0266	−0.0399	−0.0532	−0.0665	−0.0798	−0.0931
0.7	0.0931	0.0798	0.0665	0.0532	0.0399	0.0266	0.0133	0.0000	−0.0133	−0.0266	−0.0399	−0.0532	−0.0665	−0.0798
0.8	0.1064	0.0931	0.0798	0.0665	0.0532	0.0399	0.0266	0.0133	0.0000	−0.0133	−0.0266	−0.0399	−0.0532	−0.0665
0.9	0.1198	0.1064	0.0931	0.0798	0.0665	0.0532	0.0399	0.0266	0.0133	0.0000	−0.0133	−0.0266	−0.0399	−0.0532
1.0	0.1331	0.1198	0.1064	0.0931	0.0798	0.0665	0.0532	0.0399	0.0266	0.0133	0.0000	−0.0133	−0.0266	−0.0399
1.1	0.1464	0.1331	0.1198	0.1064	0.0931	0.0798	0.0665	0.0532	0.0399	0.0266	0.0133	0.0000	−0.0133	−0.0266
1.2	0.1597	0.1464	0.1331	0.1198	0.1064	0.0931	0.0798	0.0665	0.0532	0.0399	0.0266	0.0133	0.0000	−0.0133
1.3	0.1730	0.1597	0.1464	0.1331	0.1198	0.1064	0.0931	0.0798	0.0665	0.0532	0.0399	0.0266	0.0133	0.0000
1.4	0.1863	0.1730	0.1597	0.1464	0.1331	0.1198	0.1064	0.0931	0.0798	0.0665	0.0532	0.0399	0.0266	0.0133
1.5	0.1996	0.1863	0.1730	0.1597	0.1464	0.1331	0.1198	0.1064	0.0931	0.0798	0.0665	0.0532	0.0399	0.0266
1.6	0.2129	0.1996	0.1863	0.1730	0.1597	0.1464	0.1331	0.1198	0.1064	0.0931	0.0798	0.0665	0.0532	0.0399
1.7	0.2262	0.2129	0.1996	0.1863	0.1730	0.1597	0.1464	0.1331	0.1198	0.1064	0.0931	0.0798	0.0665	0.0532
1.8	0.2395	0.2262	0.2129	0.1996	0.1863	0.1730	0.1597	0.1464	0.1331	0.1198	0.1064	0.0931	0.0798	0.0665
1.9	0.2528	0.2395	0.2262	0.2129	0.1996	0.1863	0.1730	0.1597	0.1464	0.1331	0.1198	0.1064	0.0931	0.0798
2.0	0.2661	0.2528	0.2395	0.2262	0.2129	0.1996	0.1863	0.1730	0.1597	0.1464	0.1331	0.1198	0.1064	0.0931
2.1	0.2794	0.2661	0.2528	0.2395	0.2262	0.2129	0.1996	0.1863	0.1730	0.1597	0.1464	0.1331	0.1198	0.1064
2.2	0.2927	0.2794	0.2661	0.2528	0.2395	0.2262	0.2129	0.1996	0.1863	0.1730	0.1597	0.1464	0.1331	0.1198
2.3	0.3060	0.2927	0.2794	0.2661	0.2528	0.2395	0.2262	0.2129	0.1996	0.1863	0.1730	0.1597	0.1464	0.1331
2.4	0.3193	0.3060	0.2927	0.2794	0.2661	0.2528	0.2395	0.2262	0.2129	0.1996	0.1863	0.1730	0.1597	0.1464
2.5	0.3327	0.3193	0.3060	0.2927	0.2794	0.2661	0.2528	0.2395	0.2262	0.2129	0.1996	0.1863	0.1730	0.1597
2.6	0.3460	0.3327	0.3193	0.3060	0.2927	0.2794	0.2661	0.2528	0.2395	0.2262	0.2129	0.1996	0.1863	0.1730
2.7	0.3593	0.3460	0.3327	0.3193	0.3060	0.2927	0.2794	0.2661	0.2528	0.2395	0.2262	0.2129	0.1996	0.1863
2.8	0.3726	0.3593	0.3460	0.3327	0.3193	0.3060	0.2927	0.2794	0.2661	0.2528	0.2395	0.2262	0.2129	0.1996
2.9	0.3859	0.3726	0.3593	0.3460	0.3327	0.3193	0.3060	0.2927	0.2794	0.2661	0.2528	0.2395	0.2262	0.2129
3.0	0.3992	0.3859	0.3726	0.3593	0.3460	0.3327	0.3193	0.3060	0.2927	0.2794	0.2661	0.2528	0.2395	0.2262
3.2	0.4258	0.4125	0.3992	0.3859	0.3726	0.3593	0.3460	0.3327	0.3193	0.3060	0.2927	0.2794	0.2661	0.2528
3.4	0.4524	0.4391	0.4258	0.4125	0.3992	0.3859	0.3726	0.3593	0.3460	0.3327	0.3193	0.3060	0.2927	0.2794
3.6	0.4790	0.4657	0.4524	0.4391	0.4258	0.4125	0.3992	0.3859	0.3726	0.3593	0.3460	0.3327	0.3193	0.3060
3.8	0.5056	0.4923	0.4790	0.4657	0.4524	0.4391	0.4258	0.4125	0.3992	0.3859	0.3726	0.3593	0.3460	0.3327
4.0	0.5322	0.5189	0.5056	0.4923	0.4790	0.4657	0.4524	0.4391	0.4258	0.4125	0.3992	0.3859	0.3726	0.3593
4.2	0.5589	0.5455	0.5322	0.5189	0.5056	0.4923	0.4790	0.4657	0.4524	0.4391	0.4258	0.4125	0.3992	0.3859
4.4	0.5855	0.5722	0.5589	0.5455	0.5322	0.5189	0.5056	0.4923	0.4790	0.4657	0.4524	0.4391	0.4258	0.4125
4.6	0.6121	0.5988	0.5855	0.5722	0.5589	0.5455	0.5322	0.5189	0.5056	0.4923	0.4790	0.4657	0.4524	0.4391
4.8	0.6387	0.6254	0.6121	0.5988	0.5855	0.5722	0.5589	0.5455	0.5322	0.5189	0.5056	0.4923	0.4790	0.4657
5.0	0.6653	0.6520	0.6387	0.6254	0.6121	0.5988	0.5855	0.5722	0.5589	0.5455	0.5322	0.5189	0.5056	0.4923
5.2	0.6919	0.6786	0.6653	0.6520	0.6387	0.6254	0.6121	0.5988	0.5855	0.5722	0.5589	0.5455	0.5322	0.5189
5.4	0.7185	0.7052	0.6919	0.6786	0.6653	0.6520	0.6387	0.6254	0.6121	0.5988	0.5855	0.5722	0.5539	0.5455
5.6	0.7451	0.7318	0.7185	0.7052	0.6919	0.6786	0.6653	0.6520	0.6387	0.6254	0.6121	0.5988	0.5855	0.5722
5.8	0.7717	0.7584	0.7451	0.7318	0.7185	0.7052	0.6919	0.6786	0.6653	0.6520	0.6387	0.6254	0.6121	0.5988
6.0	0.7984	0.7851	0.7717	0.7584	0.7451	0.7318	0.7185	0.7052	0.6919	0.6786	0.6653	0.6520	0.6387	0.6254

APPENDIX B
PAGE 32 PANEL 2 of 3

TABLE B-6B. MEAN BEARING ERROR, $\bar{X}$ - QUADRANT II

-1.4	-1.5	-1.6	-1.7	-1.8	-1.9	-2.0	-2.1	-2.2	-2.3	-2.4	-2.5	-2.6	-2.7	-2.8	-2.9	-3.0	-3.2	-3.4
-0.1863	-0.1996	-0.2129	-0.2262	-0.2395	-0.2528	-0.2661	-0.2794	-0.2927	-0.3060	-0.3193	-0.3327	-0.3460	-0.3593	-0.3726	-0.3859	-0.3992	-0.4258	-0.4524
-0.1730	-0.1863	-0.1996	-0.2129	-0.2262	-0.2395	-0.2528	-0.2661	-0.2794	-0.2927	-0.3060	-0.3193	-0.3327	-0.3460	-0.3593	-0.3726	-0.3859	-0.4125	-0.4391
-0.1597	-0.1730	-0.1863	-0.1996	-0.2129	-0.2262	-0.2395	-0.2528	-0.2661	-0.2794	-0.2927	-0.3060	-0.3193	-0.3327	-0.3460	-0.3593	-0.3726	-0.3992	-0.4258
-0.1464	-0.1597	-0.1730	-0.1863	-0.1996	-0.2129	-0.2262	-0.2395	-0.2528	-0.2661	-0.2794	-0.2927	-0.3060	-0.3193	-0.3327	-0.3460	-0.3593	-0.3859	-0.4125
-0.1331	-0.1464	-0.1597	-0.1730	-0.1863	-0.1996	-0.2129	-0.2262	-0.2395	-0.2528	-0.2661	-0.2794	-0.2927	-0.3060	-0.3193	-0.3327	-0.3460	-0.3726	-0.3992
-0.1198	-0.1331	-0.1464	-0.1597	-0.1730	-0.1863	-0.1996	-0.2129	-0.2262	-0.2395	-0.2528	-0.2661	-0.2794	-0.2927	-0.3060	-0.3193	-0.3327	-0.3593	-0.3859
-0.1064	-0.1198	-0.1331	-0.1464	-0.1597	-0.1730	-0.1863	-0.1996	-0.2129	-0.2262	-0.2395	-0.2528	-0.2661	-0.2794	-0.2927	-0.3060	-0.3193	-0.3460	-0.3726
-0.0931	-0.1064	-0.1198	-0.1331	-0.1464	-0.1597	-0.1730	-0.1863	-0.1996	-0.2129	-0.2262	-0.2395	-0.2528	-0.2661	-0.2794	-0.2927	-0.3060	-0.3327	-0.3593
-0.0798	-0.0931	-0.1064	-0.1198	-0.1331	-0.1464	-0.1597	-0.1730	-0.1863	-0.1996	-0.2129	-0.2262	-0.2395	-0.2528	-0.2661	-0.2794	-0.2927	-0.3193	-0.3460
-0.0665	-0.0798	-0.0931	-0.1064	-0.1198	-0.1331	-0.1464	-0.1597	-0.1730	-0.1863	-0.1996	-0.2129	-0.2262	-0.2395	-0.2528	-0.2661	-0.2794	-0.3060	-0.3327
-0.0532	-0.0665	-0.0798	-0.0931	-0.1064	-0.1198	-0.1331	-0.1464	-0.1597	-0.1730	-0.1863	-0.1996	-0.2129	-0.2262	-0.2395	-0.2528	-0.2661	-0.2927	-0.3193
-0.0399	-0.0532	-0.0665	-0.0798	-0.0931	-0.1064	-0.1198	-0.1331	-0.1464	-0.1597	-0.1730	-0.1863	-0.1996	-0.2129	-0.2262	-0.2395	-0.2528	-0.2794	-0.3060
-0.0266	-0.0399	-0.0532	-0.0665	-0.0798	-0.0931	-0.1064	-0.1198	-0.1331	-0.1464	-0.1597	-0.1730	-0.1863	-0.1996	-0.2129	-0.2262	-0.2395	-0.2661	-0.2927
-0.0133	-0.0266	-0.0399	-0.0532	-0.0665	-0.0798	-0.0931	-0.1064	-0.1198	-0.1331	-0.1464	-0.1597	-0.1730	-0.1863	-0.1996	-0.2129	-0.2262	-0.2528	-0.2794
0.0000	-0.0133	-0.0266	-0.0399	-0.0532	-0.0665	-0.0798	-0.0931	-0.1064	-0.1198	-0.1331	-0.1464	-0.1597	-0.1730	-0.1863	-0.1996	-0.2129	-0.2395	-0.2661
0.0133	0.0000	-0.0133	-0.0266	-0.0399	-0.0532	-0.0665	-0.0798	-0.0931	-0.1064	-0.1198	-0.1331	-0.1464	-0.1597	-0.1730	-0.1863	-0.1996	-0.2262	-0.2528
0.0266	0.0133	0.0000	-0.0133	-0.0266	-0.0399	-0.0532	-0.0665	-0.0798	-0.0931	-0.1064	-0.1198	-0.1331	-0.1464	-0.1597	-0.1730	-0.1863	-0.2129	-0.2395
0.0399	0.0266	0.0133	0.0000	-0.0133	-0.0266	-0.0399	-0.0532	-0.0665	-0.0798	-0.0931	-0.1064	-0.1198	-0.1331	-0.1464	-0.1597	-0.1730	-0.1996	-0.2262
0.0532	0.0399	0.0266	0.0133	0.0000	-0.0133	-0.0266	-0.0399	-0.0532	-0.0665	-0.0798	-0.0931	-0.1064	-0.1198	-0.1331	-0.1464	-0.1597	-0.1863	-0.2129
0.0665	0.0532	0.0399	0.0266	0.0133	0.0000	-0.0133	-0.0266	-0.0399	-0.0532	-0.0665	-0.0798	-0.0931	-0.1064	-0.1198	-0.1331	-0.1464	-0.1730	-0.1996
0.0798	0.0665	0.0532	0.0399	0.0266	0.0133	0.0000	-0.0133	-0.0266	-0.0399	-0.0532	-0.0665	-0.0798	-0.0931	-0.1064	-0.1198	-0.1331	-0.1597	-0.1863
0.0931	0.0798	0.0665	0.0532	0.0399	0.0266	0.0133	0.0000	-0.0133	-0.0266	-0.0399	-0.0532	-0.0665	-0.0798	-0.0931	-0.1064	-0.1198	-0.1464	-0.1730
0.1064	0.0931	0.0798	0.0665	0.0532	0.0399	0.0266	0.0133	0.0000	-0.0133	-0.0266	-0.0399	-0.0532	-0.0665	-0.0798	-0.0931	-0.1064	-0.1331	-0.1597
0.1198	0.1064	0.0931	0.0798	0.0665	0.0532	0.0399	0.0266	0.0133	0.0000	-0.0133	-0.0266	-0.0399	-0.0532	-0.0665	-0.0798	-0.0931	-0.1198	-0.1464
0.1331	0.1198	0.1064	0.0931	0.0798	0.0665	0.0532	0.0399	0.0266	0.0133	0.0000	-0.0133	-0.0266	-0.0399	-0.0532	-0.0665	-0.0798	-0.1064	-0.1331
0.1464	0.1331	0.1198	0.1064	0.0931	0.0798	0.0665	0.0532	0.0399	0.0266	0.0133	0.0000	-0.0133	-0.0266	-0.0399	-0.0532	-0.0665	-0.0931	-0.1198
0.1597	0.1464	0.1331	0.1198	0.1064	0.0931	0.0798	0.0665	0.0532	0.0399	0.0266	0.0133	0.0000	-0.0133	-0.0266	-0.0399	-0.0532	-0.0798	-0.1064
0.1730	0.1597	0.1464	0.1331	0.1198	0.1064	0.0931	0.0798	0.0665	0.0532	0.0399	0.0266	0.0133	0.0000	-0.0133	-0.0266	-0.0399	-0.0665	-0.0931
0.1863	0.1730	0.1597	0.1464	0.1331	0.1198	0.1064	0.0931	0.0798	0.0665	0.0532	0.0399	0.0266	0.0133	0.0000	-0.0133	-0.0266	-0.0532	-0.0798
0.1996	0.1863	0.1730	0.1597	0.1464	0.1331	0.1198	0.1064	0.0931	0.0798	0.0665	0.0532	0.0399	0.0266	0.0133	0.0000	-0.0133	-0.0399	-0.0665
0.2129	0.1996	0.1863	0.1730	0.1597	0.1464	0.1331	0.1198	0.1064	0.0931	0.0798	0.0665	0.0532	0.0399	0.0266	0.0133	0.0000	-0.0266	-0.0532
0.2395	0.2262	0.2129	0.1996	0.1863	0.1730	0.1597	0.1464	0.1331	0.1198	0.1064	0.0931	0.0798	0.0665	0.0532	0.0399	0.0266	0.0000	-0.0266
0.2661	0.2528	0.2395	0.2262	0.2129	0.1996	0.1863	0.1730	0.1597	0.1464	0.1331	0.1198	0.1064	0.0931	0.0798	0.0665	0.0532	0.0266	0.0000
0.2927	0.2794	0.2661	0.2528	0.2395	0.2262	0.2129	0.1996	0.1863	0.1730	0.1597	0.1464	0.1331	0.1198	0.1064	0.0931	0.0798	0.0532	0.0266
0.3193	0.3060	0.2927	0.2794	0.2661	0.2528	0.2395	0.2262	0.2129	0.1996	0.1863	0.1730	0.1597	0.1464	0.1331	0.1198	0.1064	0.0798	0.0532
0.3460	0.3327	0.3193	0.3060	0.2927	0.2794	0.2661	0.2528	0.2395	0.2262	0.2129	0.1996	0.1863	0.1730	0.1597	0.1464	0.1331	0.1064	0.0798
0.3726	0.3593	0.3460	0.3327	0.3193	0.3060	0.2927	0.2794	0.2661	0.2528	0.2395	0.2262	0.2129	0.1996	0.1863	0.1730	0.1597	0.1331	0.1064
0.3992	0.3859	0.3726	0.3593	0.3460	0.3327	0.3193	0.3060	0.2927	0.2794	0.2661	0.2528	0.2395	0.2262	0.2129	0.1996	0.1863	0.1597	0.1331
0.4258	0.4125	0.3992	0.3859	0.3726	0.3593	0.3460	0.3327	0.3193	0.3060	0.2927	0.2794	0.2661	0.2528	0.2395	0.2262	0.2129	0.1863	0.1597
0.4524	0.4391	0.4258	0.4125	0.3992	0.3859	0.3726	0.3593	0.3460	0.3327	0.3193	0.3060	0.2927	0.2794	0.2661	0.2528	0.2395	0.2129	0.1863
0.4790	0.4657	0.4524	0.4391	0.4258	0.4125	0.3992	0.3859	0.3726	0.3593	0.3460	0.3327	0.3193	0.3060	0.2927	0.2794	0.2661	0.2395	0.2129
0.5056	0.4923	0.4790	0.4657	0.4524	0.4391	0.4258	0.4125	0.3992	0.3859	0.3726	0.3593	0.3460	0.3327	0.3193	0.3060	0.2927	0.2661	0.2395
0.5322	0.5189	0.5056	0.4923	0.4790	0.4657	0.4524	0.4391	0.4258	0.4125	0.3992	0.3859	0.3726	0.3593	0.3460	0.3327	0.3193	0.2927	0.2661
0.5589	0.5455	0.5322	0.5189	0.5056	0.4923	0.4790	0.4657	0.4524	0.4391	0.4258	0.4125	0.3992	0.3859	0.3726	0.3593	0.3460	0.3193	0.2927
0.5855	0.5722	0.5589	0.5455	0.5322	0.5189	0.5056	0.4923	0.4790	0.4657	0.4524	0.4391	0.4258	0.4125	0.3992	0.3859	0.3726	0.3460	0.3193
0.6121	0.5988	0.5855	0.5722	0.5589	0.5455	0.5322	0.5189	0.5056	0.4923	0.4790	0.4657	0.4524	0.4391	0.4258	0.4125	0.3992	0.3726	0.3460

APPENDIX B

PAGE 32 - PANEL 3 of 3

-3.6	-3.8	-4.0	-4.2	-4.4	-4.6	-4.8	-5.0	-5.2	-5.4	-5.6	-5.8	-6.0	x_H / x_L
-0.4790	-0.5056	-0.5322	-0.5589	-0.5855	-0.6121	-0.6387	-0.6653	-0.6919	-0.7185	-0.7451	-0.7717	-0.7984	0.0
-0.4657	-0.4923	-0.5189	-0.5455	-0.5722	-0.5988	-0.6254	-0.6520	-0.6786	-0.7052	-0.7318	-0.7584	-0.7851	0.1
-0.4524	-0.4790	-0.5056	-0.5322	-0.5589	-0.5855	-0.6121	-0.6387	-0.6653	-0.6919	-0.7185	-0.7451	-0.7717	0.2
-0.4391	-0.4657	-0.4923	-0.5189	-0.5455	-0.5722	-0.5988	-0.6254	-0.6520	-0.6786	-0.7052	-0.7318	-0.7584	0.3
-0.4258	-0.4524	-0.4790	-0.5056	-0.5322	-0.5589	-0.5855	-0.6121	-0.6387	-0.6653	-0.6919	-0.7185	-0.7451	0.4
-0.4125	-0.4391	-0.4657	-0.4923	-0.5189	-0.5455	-0.5722	-0.5988	-0.6254	-0.6520	-0.6786	-0.7052	-0.7318	0.5
-0.3992	-0.4258	-0.4524	-0.4790	-0.5056	-0.5322	-0.5589	-0.5855	-0.6121	-0.6387	-0.6653	-0.6919	-0.7185	0.6
-0.3859	-0.4125	-0.4391	-0.4657	-0.4923	-0.5189	-0.5455	-0.5722	-0.5988	-0.6254	-0.6520	-0.6786	-0.7052	0.7
-0.3726	-0.3992	-0.4258	-0.4524	-0.4790	-0.5056	-0.5322	-0.5589	-0.5855	-0.6121	-0.6387	-0.6653	-0.6919	0.8
-0.3593	-0.3859	-0.4125	-0.4391	-0.4657	-0.4923	-0.5189	-0.5455	-0.5722	-0.5988	-0.6254	-0.6520	-0.6786	0.9
-0.3460	-0.3726	-0.3992	-0.4258	-0.4524	-0.4790	-0.5056	-0.5322	-0.5589	-0.5855	-0.6121	-0.6387	-0.6653	1.0
-0.3327	-0.3593	-0.3859	-0.4125	-0.4391	-0.4657	-0.4923	-0.5189	-0.5455	-0.5722	-0.5988	-0.6254	-0.6520	1.1
-0.3193	-0.3460	-0.3726	-0.3992	-0.4258	-0.4524	-0.4790	-0.5056	-0.5322	-0.5589	-0.5855	-0.6121	-0.6387	1.2
-0.3060	-0.3327	-0.3593	-0.3859	-0.4125	-0.4391	-0.4657	-0.4923	-0.5189	-0.5455	-0.5722	-0.5988	-0.6254	1.3
-0.2927	-0.3193	-0.3460	-0.3726	-0.3992	-0.4258	-0.4524	-0.4790	-0.5056	-0.5322	-0.5589	-0.5855	-0.6121	1.4
-0.2794	-0.3060	-0.3327	-0.3593	-0.3859	-0.4125	-0.4391	-0.4657	-0.4923	-0.5189	-0.5455	-0.5722	-0.5988	1.5
-0.2661	-0.2927	-0.3193	-0.3460	-0.3726	-0.3992	-0.4258	-0.4524	-0.4790	-0.5056	-0.5322	-0.5589	-0.5855	1.6
-0.2528	-0.2794	-0.3060	-0.3327	-0.3593	-0.3859	-0.4125	-0.4391	-0.4657	-0.4923	-0.5189	-0.5455	-0.5722	1.7
-0.2395	-0.2661	-0.2927	-0.3193	-0.3460	-0.3726	-0.3992	-0.4258	-0.4524	-0.4790	-0.5056	-0.5322	-0.5589	1.8
-0.2262	-0.2528	-0.2794	-0.3060	-0.3327	-0.3593	-0.3859	-0.4125	-0.4391	-0.4657	-0.4923	-0.5189	-0.5455	1.9
-0.2129	-0.2395	-0.2661	-0.2927	-0.3193	-0.3460	-0.3726	-0.3992	-0.4258	-0.4524	-0.4790	-0.5056	-0.5322	2.0
-0.1996	-0.2262	-0.2528	-0.2794	-0.3060	-0.3327	-0.3593	-0.3859	-0.4125	-0.4391	-0.4657	-0.4923	-0.5189	2.1
-0.1863	-0.2129	-0.2395	-0.2661	-0.2927	-0.3193	-0.3460	-0.3726	-0.3992	-0.4258	-0.4524	-0.4790	-0.5056	2.2
-0.1730	-0.1996	-0.2262	-0.2528	-0.2794	-0.3060	-0.3327	-0.3593	-0.3859	-0.4125	-0.4391	-0.4657	-0.4923	2.3
-0.1597	-0.1863	-0.2129	-0.2395	-0.2661	-0.2927	-0.3193	-0.3460	-0.3726	-0.3992	-0.4258	-0.4524	-0.4790	2.4
-0.1464	-0.1730	-0.1996	-0.2262	-0.2528	-0.2794	-0.3060	-0.3327	-0.3593	-0.3859	-0.4125	-0.4391	-0.4657	2.5
-0.1331	-0.1597	-0.1863	-0.2129	-0.2395	-0.2661	-0.2927	-0.3193	-0.3460	-0.3726	-0.3992	-0.4258	-0.4524	2.6
-0.1198	-0.1464	-0.1730	-0.1996	-0.2262	-0.2528	-0.2794	-0.3060	-0.3327	-0.3593	-0.3859	-0.4125	-0.4391	2.7
-0.1064	-0.1331	-0.1597	-0.1863	-0.2129	-0.2395	-0.2661	-0.2927	-0.3193	-0.3460	-0.3726	-0.3992	-0.4258	2.8
-0.0931	-0.1198	-0.1464	-0.1730	-0.1996	-0.2262	-0.2528	-0.2794	-0.3060	-0.3327	-0.3593	-0.3859	-0.4125	2.9
-0.0798	-0.1064	-0.1331	-0.1597	-0.1863	-0.2129	-0.2395	-0.2661	-0.2927	-0.3193	-0.3460	-0.3726	-0.3992	3.0
-0.0532	-0.0798	-0.1064	-0.1331	-0.1597	-0.1863	-0.2129	-0.2395	-0.2661	-0.2927	-0.3193	-0.3460	-0.3726	3.2
-0.0266	-0.0532	-0.0798	-0.1064	-0.1331	-0.1597	-0.1863	-0.2129	-0.2395	-0.2661	-0.2927	-0.3193	-0.3460	3.4
0.0000	-0.0266	-0.0532	-0.0798	-0.1064	-0.1331	-0.1597	-0.1863	-0.2129	-0.2395	-0.2661	-0.2927	-0.3193	3.6
0.0266	0.0000	-0.0266	-0.0532	-0.0798	-0.1064	-0.1331	-0.1597	-0.1863	-0.2129	-0.2395	-0.2661	-0.2927	3.8
0.0532	0.0266	0.0000	-0.0266	-0.0532	-0.0798	-0.1064	-0.1331	-0.1597	-0.1863	-0.2129	-0.2395	-0.2661	4.0
0.0798	0.0532	0.0266	0.0000	-0.0266	-0.0532	-0.0798	-0.1064	-0.1331	-0.1597	-0.1863	-0.2129	-0.2395	4.2
0.1064	0.0798	0.0532	0.0266	0.0000	-0.0266	-0.0532	-0.0798	-0.1064	-0.1331	-0.1597	-0.1863	-0.2129	4.4
0.1331	0.1064	0.0798	0.0532	0.0266	0.0000	-0.0266	-0.0532	-0.0798	-0.1064	-0.1331	-0.1597	-0.1863	4.6
0.1597	0.1331	0.1064	0.0798	0.0532	0.0266	0.0000	-0.0266	-0.0532	-0.0798	-0.1064	-0.1331	-0.1597	4.8
0.1863	0.1597	0.1331	0.1064	0.0798	0.0532	0.0266	0.0000	-0.0266	-0.0532	-0.0798	-0.1064	-0.1331	5.0
0.2129	0.1863	0.1597	0.1331	0.1064	0.0798	0.0532	0.0266	0.0000	-0.0266	-0.0532	-0.0798	-0.1064	5.2
0.2395	0.2129	0.1863	0.1597	0.1331	0.1064	0.0798	0.0532	0.0266	0.0000	-0.0266	-0.0532	-0.0798	5.4
0.2661	0.2395	0.2129	0.1863	0.1597	0.1331	0.1064	0.0798	0.0532	0.0266	0.0000	-0.0266	-0.0532	5.6
0.2927	0.2661	0.2395	0.2129	0.1863	0.1597	0.1331	0.1064	0.0798	0.0532	0.0266	0.0000	-0.0266	5.8
0.3193	0.2927	0.2661	0.2395	0.2129	0.1863	0.1597	0.1331	0.1064	0.0798	0.0532	0.0266	0.0000	6.0

APPENDIX B

PAGE 33 - PANEL 1 of 3

X_H / X_L	0.0	-0.1	-0.2	-0.3	-0.4	-0.5	-0.6	-0.7	-0.8	-0.9	-1.0	-1.1	-1.2
0.0	0.0000	-0.0133	-0.0266	-0.0399	-0.0532	-0.0665	-0.0798	-0.0931	-0.1064	-0.1198	-0.1331	-0.1464	-0.159
-0.1	-0.0133	-0.0266	-0.0399	-0.0532	-0.0665	-0.0798	-0.0931	-0.1064	-0.1198	-0.1331	-0.1464	-0.1597	-0.173
-0.2	-0.0266	-0.0399	-0.0532	-0.0665	-0.0798	-0.0931	-0.1064	-0.1198	-0.1331	-0.1464	-0.1597	-0.1730	-0.186
-0.3	-0.0399	-0.0532	-0.0665	-0.0798	-0.0931	-0.1064	-0.1198	-0.1331	-0.1464	-0.1597	-0.1730	-0.1863	-0.199
-0.4	-0.0532	-0.0665	-0.0798	-0.0931	-0.1064	-0.1198	-0.1331	-0.1464	-0.1597	-0.1730	-0.1863	-0.1996	-0.212
-0.5	-0.0665	-0.0798	-0.0931	-0.1064	-0.1198	-0.1331	-0.1464	-0.1597	-0.1730	-0.1863	-0.1996	-0.2129	-0.226
-0.6	-0.0798	-0.0931	-0.1064	-0.1198	-0.1331	-0.1464	-0.1597	-0.1730	-0.1863	-0.1996	-0.2129	-0.2262	-0.239
-0.7	-0.0931	-0.1064	-0.1198	-0.1331	-0.1464	-0.1597	-0.1730	-0.1863	-0.1996	-0.2129	-0.2262	-0.2395	-0.252
-0.8	-0.1064	-0.1198	-0.1331	-0.1464	-0.1597	-0.1730	-0.1863	-0.1996	-0.2129	-0.2262	-0.2395	-0.2528	-0.266
-0.9	-0.1198	-0.1331	-0.1464	-0.1597	-0.1730	-0.1863	-0.1996	-0.2129	-0.2262	-0.2395	-0.2528	-0.2661	-0.279
-1.0	-0.1331	-0.1464	-0.1597	-0.1730	-0.1863	-0.1996	-0.2129	-0.2262	-0.2395	-0.2528	-0.2661	-0.2794	-0.292
-1.1	-0.1464	-0.1597	-0.1730	-0.1863	-0.1996	-0.2129	-0.2262	-0.2395	-0.2528	-0.2661	-0.2794	-0.2927	-0.306
-1.2	-0.1597	-0.1730	-0.1863	-0.1996	-0.2129	-0.2262	-0.2395	-0.2528	-0.2661	-0.2794	-0.2927	-0.3060	-0.319
-1.3	-0.1730	-0.1863	-0.1996	-0.2129	-0.2262	-0.2395	-0.2528	-0.2661	-0.2794	-0.2927	-0.3060	-0.3193	-0.332
-1.4	-0.1863	-0.1996	-0.2129	-0.2262	-0.2395	-0.2528	-0.2661	-0.2794	-0.2927	-0.3060	-0.3193	-0.3327	-0.346
-1.5	-0.1996	-0.2129	-0.2262	-0.2395	-0.2528	-0.2661	-0.2794	-0.2927	-0.3060	-0.3193	-0.3327	-0.3460	-0.359
-1.6	-0.2129	-0.2262	-0.2395	-0.2528	-0.2661	-0.2794	-0.2927	-0.3060	-0.3193	-0.3327	-0.3460	-0.3593	-0.372
-1.7	-0.2262	-0.2395	-0.2528	-0.2661	-0.2794	-0.2927	-0.3060	-0.3193	-0.3327	-0.3460	-0.3593	-0.3726	-0.385
-1.8	-0.2395	-0.2528	-0.2661	-0.2794	-0.2927	-0.3060	-0.3193	-0.3327	-0.3460	-0.3593	-0.3726	-0.3859	-0.399
-1.9	-0.2528	-0.2661	-0.2794	-0.2927	-0.3060	-0.3193	-0.3327	-0.3460	-0.3593	-0.3726	-0.3859	-0.3992	-0.412
-2.0	-0.2661	-0.2794	-0.2927	-0.3060	-0.3193	-0.3327	-0.3460	-0.3593	-0.3726	-0.3859	-0.3992	-0.4125	-0.425
-2.1	-0.2794	-0.2927	-0.3060	-0.3193	-0.3327	-0.3460	-0.3593	-0.3726	-0.3859	-0.3992	-0.4125	-0.4258	-0.439
-2.2	-0.2927	-0.3060	-0.3193	-0.3327	-0.3460	-0.3593	-0.3726	-0.3859	-0.3992	-0.4125	-0.4258	-0.4391	-0.452
-2.3	-0.3060	-0.3193	-0.3327	-0.3460	-0.3593	-0.3726	-0.3859	-0.3992	-0.4125	-0.4258	-0.4391	-0.4524	-0.465
-2.4	-0.3193	-0.3327	-0.3460	-0.3593	-0.3726	-0.3859	-0.3992	-0.4125	-0.4258	-0.4391	-0.4524	-0.4657	-0.479
-2.5	-0.3327	-0.3460	-0.3593	-0.3726	-0.3859	-0.3992	-0.4125	-0.4258	-0.4391	-0.4524	-0.4657	-0.4790	-0.492
-2.6	-0.3460	-0.3593	-0.3726	-0.3859	-0.3992	-0.4125	-0.4258	-0.4391	-0.4524	-0.4657	-0.4790	-0.4923	-0.505
-2.7	-0.3593	-0.3726	-0.3859	-0.3992	-0.4125	-0.4258	-0.4391	-0.4524	-0.4657	-0.4790	-0.4923	-0.5056	-0.518
-2.8	-0.3726	-0.3859	-0.3992	-0.4125	-0.4258	-0.4391	-0.4524	-0.4657	-0.4790	-0.4923	-0.5056	-0.5189	-0.532
-2.9	-0.3859	-0.3992	-0.4125	-0.4258	-0.4391	-0.4524	-0.4657	-0.4790	-0.4923	-0.5056	-0.5189	-0.5322	-0.545
-3.0	-0.3992	-0.4125	-0.4258	-0.4391	-0.4524	-0.4657	-0.4790	-0.4923	-0.5056	-0.5189	-0.5322	-0.5455	-0.558
-3.2	-0.4258	-0.4391	-0.4524	-0.4657	-0.4790	-0.4923	-0.5056	-0.5189	-0.5322	-0.5455	-0.5589	-0.5722	-0.585
-3.4	-0.4524	-0.4657	-0.4790	-0.4923	-0.5056	-0.5189	-0.5322	-0.5455	-0.5589	-0.5722	-0.5855	-0.5988	-0.612
-3.6	-0.4790	-0.4923	-0.5056	-0.5189	-0.5322	-0.5455	-0.5589	-0.5722	-0.5855	-0.5988	-0.6121	-0.6254	-0.638
-3.8	-0.5056	-0.5189	-0.5322	-0.5455	-0.5589	-0.5722	-0.5855	-0.5988	-0.6121	-0.6254	-0.6387	-0.6520	-0.665
-4.0	-0.5322	-0.5455	-0.5589	-0.5722	-0.5855	-0.5988	-0.6121	-0.6254	-0.6387	-0.6520	-0.6653	-0.6786	-0.691
-4.2	-0.5589	-0.5722	-0.5855	-0.5988	-0.6121	-0.6254	-0.6387	-0.6520	-0.6653	-0.6786	-0.6919	-0.7052	-0.718
-4.4	-0.5855	-0.5988	-0.6121	-0.6254	-0.6387	-0.6520	-0.6653	-0.6786	-0.6919	-0.7052	-0.7185	-0.7318	-0.745
-4.6	-0.6121	-0.6254	-0.6387	-0.6520	-0.6653	-0.6786	-0.6919	-0.7052	-0.7185	-0.7318	-0.7451	-0.7584	-0.771
-4.8	-0.6387	-0.6520	-0.6653	-0.6786	-0.6919	-0.7052	-0.7185	-0.7318	-0.7451	-0.7584	-0.7717	-0.7851	-0.798
-5.0	-0.6653	-0.6786	-0.6919	-0.7052	-0.7185	-0.7318	-0.7451	-0.7584	-0.7717	-0.7851	-0.7984	-0.8117	-0.825
-5.2	-0.6919	-0.7052	-0.7185	-0.7318	-0.7451	-0.7584	-0.7717	-0.7851	-0.7984	-0.8117	-0.8250	-0.8383	-0.851
-5.4	-0.7185	-0.7318	-0.7451	-0.7584	-0.7717	-0.7851	-0.7984	-0.8117	-0.8250	-0.8383	-0.8516	-0.8649	-0.878
-5.6	-0.7451	-0.7584	-0.7717	-0.7851	-0.7984	-0.8117	-0.8250	-0.8383	-0.8516	-0.8649	-0.8782	-0.8915	-0.904
-5.8	-0.7717	-0.7851	-0.7984	-0.8117	-0.8250	-0.8383	-0.8516	-0.8649	-0.8782	-0.8915	-0.9048	-0.9181	-0.931
-6.0	-0.7984	-0.8117	-0.8250	-0.8383	-0.8516	-0.8649	-0.8782	-0.8915	-0.9048	-0.9181	-0.9314	-0.9447	-0.958

Appendix B

Page 33 - Panel 2 of 3

TABLE B-6C. MEAN BEARING ERROR, $\overline{X}$ - QUADRANT III

-1.3	-1.4	-1.5	-1.6	-1.7	-1.8	-1.9	-2.0	-2.1	-2.2	-2.3	-2.4	-2.5	-2.6	-2.7	-2.8	-2.9	-3.0	-3.2	-3.4
-0.1730	-0.1863	-0.1996	-0.2129	-0.2262	-0.2395	-0.2528	-0.2661	-0.2794	-0.2927	-0.3060	-0.3193	-0.3327	-0.3460	-0.3593	-0.3726	-0.3859	-0.3992	-0.4258	-0.4524
-0.1863	-0.1996	-0.2129	-0.2262	-0.2395	-0.2528	-0.2661	-0.2794	-0.2927	-0.3060	-0.3193	-0.3327	-0.3460	-0.3593	-0.3726	-0.3859	-0.3992	-0.4125	-0.4391	-0.4657
-0.1996	-0.2129	-0.2262	-0.2395	-0.2528	-0.2661	-0.2794	-0.2927	-0.3060	-0.3193	-0.3327	-0.3460	-0.3593	-0.3726	-0.3859	-0.3992	-0.4125	-0.4258	-0.4524	-0.4790
-0.2129	-0.2262	-0.2395	-0.2528	-0.2661	-0.2794	-0.2927	-0.3060	-0.3193	-0.3327	-0.3460	-0.3593	-0.3726	-0.3859	-0.3992	-0.4125	-0.4258	-0.4391	-0.4657	-0.4923
-0.2262	-0.2395	-0.2528	-0.2661	-0.2794	-0.2927	-0.3060	-0.3193	-0.3327	-0.3460	-0.3593	-0.3726	-0.3859	-0.3992	-0.4125	-0.4258	-0.4391	-0.4524	-0.4790	-0.5056
-0.2395	-0.2528	-0.2661	-0.2794	-0.2927	-0.3060	-0.3193	-0.3327	-0.3460	-0.3593	-0.3726	-0.3859	-0.3992	-0.4125	-0.4258	-0.4391	-0.4524	-0.4657	-0.4923	-0.5189
-0.2528	-0.2661	-0.2794	-0.2927	-0.3060	-0.3193	-0.3327	-0.3460	-0.3593	-0.3726	-0.3859	-0.3992	-0.4125	-0.4258	-0.4391	-0.4524	-0.4657	-0.4790	-0.5056	-0.5322
-0.2661	-0.2794	-0.2927	-0.3060	-0.3193	-0.3327	-0.3460	-0.3593	-0.3726	-0.3859	-0.3992	-0.4125	-0.4258	-0.4391	-0.4524	-0.4657	-0.4790	-0.4923	-0.5189	-0.5455
-0.2794	-0.2927	-0.3060	-0.3193	-0.3327	-0.3460	-0.3593	-0.3726	-0.3859	-0.3992	-0.4125	-0.4258	-0.4391	-0.4524	-0.4657	-0.4790	-0.4923	-0.5056	-0.5322	-0.5589
-0.2927	-0.3060	-0.3193	-0.3327	-0.3460	-0.3593	-0.3726	-0.3859	-0.3992	-0.4125	-0.4258	-0.4391	-0.4524	-0.4657	-0.4790	-0.4923	-0.5056	-0.5189	-0.5455	-0.5722
-0.3060	-0.3193	-0.3327	-0.3460	-0.3593	-0.3726	-0.3859	-0.3992	-0.4125	-0.4258	-0.4391	-0.4524	-0.4657	-0.4790	-0.4923	-0.5056	-0.5189	-0.5322	-0.5589	-0.5855
-0.3193	-0.3327	-0.3460	-0.3593	-0.3726	-0.3859	-0.3992	-0.4125	-0.4258	-0.4391	-0.4524	-0.4657	-0.4790	-0.4923	-0.5056	-0.5189	-0.5322	-0.5455	-0.5722	-0.5988
-0.3327	-0.3460	-0.3593	-0.3726	-0.3859	-0.3992	-0.4125	-0.4258	-0.4391	-0.4524	-0.4657	-0.4790	-0.4923	-0.5056	-0.5189	-0.5322	-0.5455	-0.5589	-0.5855	-0.6121
-0.3460	-0.3593	-0.3726	-0.3859	-0.3992	-0.4125	-0.4258	-0.4391	-0.4524	-0.4657	-0.4790	-0.4923	-0.5056	-0.5189	-0.5322	-0.5455	-0.5589	-0.5722	-0.5988	-0.6254
-0.3593	-0.3726	-0.3859	-0.3992	-0.4125	-0.4258	-0.4391	-0.4524	-0.4657	-0.4790	-0.4923	-0.5056	-0.5189	-0.5322	-0.5455	-0.5589	-0.5722	-0.5855	-0.6121	-0.6387
-0.3726	-0.3859	-0.3992	-0.4125	-0.4258	-0.4391	-0.4524	-0.4657	-0.4790	-0.4923	-0.5056	-0.5189	-0.5322	-0.5455	-0.5589	-0.5722	-0.5855	-0.5988	-0.6254	-0.6520
-0.3859	-0.3992	-0.4125	-0.4258	-0.4391	-0.4524	-0.4657	-0.4790	-0.4923	-0.5056	-0.5189	-0.5322	-0.5455	-0.5589	-0.5722	-0.5855	-0.5988	-0.6121	-0.6387	-0.6653
-0.3992	-0.4125	-0.4258	-0.4391	-0.4524	-0.4657	-0.4790	-0.4923	-0.5056	-0.5189	-0.5322	-0.5455	-0.5589	-0.5722	-0.5855	-0.5988	-0.6121	-0.6254	-0.6520	-0.6786
-0.4125	-0.4258	-0.4391	-0.4524	-0.4657	-0.4790	-0.4923	-0.5056	-0.5189	-0.5322	-0.5455	-0.5589	-0.5722	-0.5855	-0.5988	-0.6121	-0.6254	-0.6387	-0.6653	-0.6919
-0.4258	-0.4391	-0.4524	-0.4657	-0.4790	-0.4923	-0.5056	-0.5189	-0.5322	-0.5455	-0.5589	-0.5722	-0.5855	-0.5988	-0.6121	-0.6254	-0.6387	-0.6520	-0.6786	-0.7052
-0.4391	-0.4524	-0.4657	-0.4790	-0.4923	-0.5056	-0.5189	-0.5322	-0.5455	-0.5589	-0.5722	-0.5855	-0.5988	-0.6121	-0.6254	-0.6387	-0.6520	-0.6653	-0.6919	-0.7185
-0.4524	-0.4657	-0.4790	-0.4923	-0.5056	-0.5189	-0.5322	-0.5455	-0.5589	-0.5722	-0.5855	-0.5988	-0.6121	-0.6254	-0.6387	-0.6520	-0.6653	-0.6786	-0.7052	-0.7318
-0.4657	-0.4790	-0.4923	-0.5056	-0.5189	-0.5322	-0.5455	-0.5589	-0.5722	-0.5855	-0.5988	-0.6121	-0.6254	-0.6387	-0.6520	-0.6653	-0.6786	-0.6919	-0.7185	-0.7451
-0.4790	-0.4923	-0.5056	-0.5189	-0.5322	-0.5455	-0.5589	-0.5722	-0.5855	-0.5988	-0.6121	-0.6254	-0.6387	-0.6520	-0.6653	-0.6786	-0.6919	-0.7052	-0.7318	-0.7584
-0.4923	-0.5056	-0.5189	-0.5322	-0.5455	-0.5589	-0.5722	-0.5855	-0.5988	-0.6121	-0.6254	-0.6387	-0.6520	-0.6653	-0.6786	-0.6919	-0.7052	-0.7185	-0.7451	-0.7717
-0.5056	-0.5189	-0.5322	-0.5455	-0.5589	-0.5722	-0.5855	-0.5988	-0.6121	-0.6254	-0.6387	-0.6520	-0.6653	-0.6786	-0.6919	-0.7052	-0.7185	-0.7318	-0.7584	-0.7851
-0.5189	-0.5322	-0.5455	-0.5589	-0.5722	-0.5855	-0.5988	-0.6121	-0.6254	-0.6387	-0.6520	-0.6653	-0.6786	-0.6919	-0.7052	-0.7185	-0.7318	-0.7451	-0.7717	-0.7984
-0.5322	-0.5455	-0.5589	-0.5722	-0.5855	-0.5988	-0.6121	-0.6254	-0.6387	-0.6520	-0.6653	-0.6786	-0.6919	-0.7052	-0.7185	-0.7318	-0.7451	-0.7584	-0.7851	-0.8117
-0.5455	-0.5589	-0.5722	-0.5855	-0.5988	-0.6121	-0.6254	-0.6387	-0.6520	-0.6653	-0.6786	-0.6919	-0.7052	-0.7185	-0.7318	-0.7451	-0.7584	-0.7717	-0.7984	-0.8250
-0.5589	-0.5722	-0.5855	-0.5988	-0.6121	-0.6254	-0.6387	-0.6520	-0.6653	-0.6786	-0.6919	-0.7052	-0.7185	-0.7318	-0.7451	-0.7584	-0.7717	-0.7851	-0.8117	-0.8383
-0.5722	-0.5855	-0.5988	-0.6121	-0.6254	-0.6387	-0.6520	-0.6653	-0.6786	-0.6919	-0.7052	-0.7185	-0.7318	-0.7451	-0.7584	-0.7717	-0.7851	-0.7984	-0.8250	-0.8516
-0.5988	-0.6121	-0.6254	-0.6387	-0.6520	-0.6653	-0.6786	-0.6919	-0.7052	-0.7185	-0.7318	-0.7451	-0.7584	-0.7717	-0.7851	-0.7984	-0.8117	-0.8250	-0.8516	-0.8782
-0.6254	-0.6387	-0.6520	-0.6653	-0.6786	-0.6919	-0.7052	-0.7185	-0.7318	-0.7451	-0.7584	-0.7717	-0.7851	-0.7984	-0.8117	-0.8250	-0.8383	-0.8516	-0.8782	-0.9048
-0.6520	-0.6653	-0.6786	-0.6919	-0.7052	-0.7185	-0.7318	-0.7451	-0.7584	-0.7717	-0.7851	-0.7984	-0.8117	-0.8250	-0.8383	-0.8516	-0.8649	-0.8782	-0.9048	-0.9314
-0.6786	-0.6919	-0.7052	-0.7185	-0.7318	-0.7451	-0.7584	-0.7717	-0.7851	-0.7984	-0.8117	-0.8250	-0.8383	-0.8516	-0.8649	-0.8782	-0.8915	-0.9048	-0.9314	-0.9580
-0.7052	-0.7185	-0.7318	-0.7451	-0.7584	-0.7717	-0.7851	-0.7984	-0.8117	-0.8250	-0.8383	-0.8516	-0.8649	-0.8782	-0.8915	-0.9048	-0.9181	-0.9314	-0.9580	-0.9846
-0.7318	-0.7451	-0.7584	-0.7717	-0.7851	-0.7984	-0.8117	-0.8250	-0.8383	-0.8516	-0.8649	-0.8782	-0.8915	-0.9048	-0.9181	-0.9314	-0.9447	-0.9580	-0.9846	-1.0113
-0.7584	-0.7717	-0.7851	-0.7984	-0.8117	-0.8250	-0.8383	-0.8516	-0.8649	-0.8782	-0.8915	-0.9048	-0.9181	-0.9314	-0.9447	-0.9580	-0.9713	-0.9846	-1.0113	-1.0379
-0.7851	-0.7984	-0.8117	-0.8250	-0.8383	-0.8516	-0.8649	-0.8782	-0.8915	-0.9048	-0.9181	-0.9314	-0.9447	-0.9580	-0.9713	-0.9846	-0.9980	-1.0113	-1.0379	-1.0645
-0.8117	-0.8250	-0.8383	-0.8516	-0.8649	-0.8782	-0.8915	-0.9048	-0.9181	-0.9314	-0.9447	-0.9580	-0.9713	-0.9846	-0.9980	-1.0113	-1.0246	-1.0379	-1.0645	-1.0911
-0.8383	-0.8516	-0.8649	-0.8782	-0.8915	-0.9048	-0.9181	-0.9314	-0.9447	-0.9580	-0.9713	-0.9846	-0.9980	-1.0113	-1.0246	-1.0379	-1.0512	-1.0645	-1.0911	-1.1177
-0.8649	-0.8782	-0.8915	-0.9048	-0.9181	-0.9314	-0.9447	-0.9580	-0.9713	-0.9846	-0.9980	-1.0113	-1.0246	-1.0379	-1.0512	-1.0645	-1.0778	-1.0911	-1.1177	-1.1443
-0.8915	-0.9048	-0.9181	-0.9314	-0.9447	-0.9580	-0.9713	-0.9846	-0.9980	-1.0113	-1.0246	-1.0379	-1.0512	-1.0645	-1.0778	-1.0911	-1.1044	-1.1177	-1.1443	-1.1709
-0.9181	-0.9314	-0.9447	-0.9580	-0.9713	-0.9846	-0.9980	-1.0113	-1.0246	-1.0379	-1.0512	-1.0645	-1.0778	-1.0911	-1.1044	-1.1177	-1.1310	-1.1443	-1.1709	-1.1975
-0.9447	-0.9580	-0.9713	-0.9846	-0.9980	-1.0113	-1.0246	-1.0379	-1.0512	-1.0645	-1.0778	-1.0911	-1.1044	-1.1177	-1.1310	-1.1443	-1.1576	-1.1709	-1.1975	-1.2242
-0.9713	-0.9846	-0.9980	-1.0113	-1.0246	-1.0379	-1.0512	-1.0645	-1.0778	-1.0911	-1.1044	-1.1177	-1.1310	-1.1443	-1.1576	-1.1709	-1.1842	-1.1975	-1.2242	-1.2508

PANEL 3 of 3

-3.6	-3.8	-4.0	-4.2	-4.4	-4.6	-4.8	-5.0	-5.2	-5.4	-5.6	-5.8	-6.0	x_H / x_L
-0.4790	-0.5056	-0.5322	-0.5589	-0.5855	-0.6121	-0.6387	-0.6653	-0.6919	-0.7185	-0.7451	-0.7717	-0.7984	0.0
-0.4923	-0.5189	-0.5455	-0.5722	-0.5988	-0.6254	-0.6520	-0.6786	-0.7052	-0.7318	-0.7584	-0.7851	-0.8117	-0.1
-0.5056	-0.5322	-0.5589	-0.5855	-0.6121	-0.6387	-0.6653	-0.6919	-0.7185	-0.7451	-0.7717	-0.7984	-0.8250	-0.2
-0.5189	-0.5455	-0.5722	-0.5988	-0.6254	-0.6520	-0.6786	-0.7052	-0.7318	-0.7584	-0.7851	-0.8117	-0.8383	-0.3
-0.5322	-0.5589	-0.5855	-0.6121	-0.6387	-0.6653	-0.6919	-0.7185	-0.7451	-0.7717	-0.7984	-0.8250	-0.8516	-0.4
-0.5455	-0.5722	-0.5988	-0.6254	-0.6520	-0.6786	-0.7052	-0.7318	-0.7584	-0.7851	-0.8117	-0.8383	-0.8649	-0.5
-0.5589	-0.5855	-0.6121	-0.6387	-0.6653	-0.6919	-0.7185	-0.7451	-0.7717	-0.7984	-0.8250	-0.8516	-0.8782	-0.6
-0.5722	-0.5988	-0.6254	-0.6520	-0.6786	-0.7052	-0.7318	-0.7584	-0.7851	-0.8117	-0.8383	-0.8649	-0.8915	-0.7
-0.5855	-0.6121	-0.6387	-0.6653	-0.6919	-0.7185	-0.7451	-0.7717	-0.7984	-0.8250	-0.8516	-0.8782	-0.9048	-0.8
-0.5988	-0.6254	-0.6520	-0.6786	-0.7052	-0.7318	-0.7584	-0.7851	-0.8117	-0.8383	-0.8649	-0.8915	-0.9181	-0.9
-0.6121	-0.6387	-0.6653	-0.6919	-0.7185	-0.7451	-0.7717	-0.7984	-0.8250	-0.8516	-0.8782	-0.9048	-0.9314	-1.0
-0.6254	-0.6520	-0.6786	-0.7052	-0.7318	-0.7584	-0.7851	-0.8117	-0.8383	-0.8649	-0.8915	-0.9181	-0.9447	-1.1
-0.6387	-0.6653	-0.6919	-0.7185	-0.7451	-0.7717	-0.7984	-0.8250	-0.8516	-0.8782	-0.9048	-0.9314	-0.9580	-1.2
-0.6520	-0.6786	-0.7052	-0.7318	-0.7584	-0.7851	-0.8117	-0.8383	-0.8649	-0.8915	-0.9181	-0.9447	-0.9713	-1.3
-0.6653	-0.6919	-0.7185	-0.7451	-0.7717	-0.7984	-0.8250	-0.8516	-0.8782	-0.9048	-0.9314	-0.9580	-0.9846	-1.4
-0.6786	-0.7052	-0.7318	-0.7584	-0.7851	-0.8117	-0.8383	-0.8649	-0.8915	-0.9181	-0.9447	-0.9713	-0.9980	-1.5
-0.6919	-0.7185	-0.7451	-0.7717	-0.7984	-0.8250	-0.8516	-0.8782	-0.9048	-0.9314	-0.9580	-0.9846	-1.0113	-1.6
-0.7052	-0.7318	-0.7584	-0.7851	-0.8117	-0.8383	-0.8649	-0.8915	-0.9181	-0.9447	-0.9713	-0.9980	-1.0246	-1.7
-0.7185	-0.7451	-0.7717	-0.7984	-0.8250	-0.8516	-0.8782	-0.9048	-0.9314	-0.9580	-0.9846	-1.0113	-1.0379	-1.8
-0.7318	-0.7584	-0.7851	-0.8117	-0.8383	-0.8649	-0.8915	-0.9181	-0.9447	-0.9713	-0.9980	-1.0246	-1.0512	-1.9
-0.7451	-0.7717	-0.7984	-0.8250	-0.8516	-0.8782	-0.9048	-0.9314	-0.9580	-0.9846	-1.0113	-1.0379	-1.0645	-2.0
-0.7584	-0.7851	-0.8117	-0.8383	-0.8649	-0.8915	-0.9181	-0.9447	-0.9713	-0.9980	-1.0246	-1.0512	-1.0778	-2.1
-0.7717	-0.7984	-0.8250	-0.8516	-0.8782	-0.9048	-0.9314	-0.9580	-0.9846	-1.0113	-1.0379	-1.0645	-1.0911	-2.2
-0.7851	-0.8117	-0.8383	-0.8649	-0.8915	-0.9181	-0.9447	-0.9713	-0.9980	-1.0246	-1.0512	-1.0778	-1.1044	-2.3
-0.7984	-0.8250	-0.8516	-0.8782	-0.9048	-0.9314	-0.9580	-0.9846	-1.0113	-1.0379	-1.0645	-1.0911	-1.1177	-2.4
-0.8117	-0.8383	-0.8649	-0.8915	-0.9181	-0.9447	-0.9713	-0.9980	-1.0246	-1.0512	-1.0778	-1.1044	-1.1310	-2.5
-0.8250	-0.8516	-0.8782	-0.9048	-0.9314	-0.9580	-0.9846	-1.0113	-1.0379	-1.0645	-1.0911	-1.1177	-1.1443	-2.6
-0.8383	-0.8649	-0.8915	-0.9181	-0.9447	-0.9713	-0.9980	-1.0246	-1.0512	-1.0778	-1.1044	-1.1310	-1.1576	-2.7
-0.8516	-0.8782	-0.9048	-0.9314	-0.9580	-0.9846	-1.0113	-1.0379	-1.0645	-1.0911	-1.1177	-1.1443	-1.1709	-2.8
-0.8649	-0.8915	-0.9181	-0.9447	-0.9713	-0.9980	-1.0246	-1.0512	-1.0778	-1.1044	-1.1310	-1.1576	-1.1842	-2.9
-0.8782	-0.9048	-0.9314	-0.9580	-0.9846	-1.0113	-1.0379	-1.0645	-1.0911	-1.1177	-1.1443	-1.1709	-1.1975	-3.0
-0.9048	-0.9314	-0.9580	-0.9846	-1.0113	-1.0379	-1.0645	-1.0911	-1.1177	-1.1443	-1.1709	-1.1975	-1.2242	-3.2
-0.9314	-0.9580	-0.9846	-1.0113	-1.0379	-1.0645	-1.0911	-1.1177	-1.1443	-1.1709	-1.1975	-1.2242	-1.2508	-3.4
-0.9580	-0.9846	-1.0113	-1.0379	-1.0645	-1.0911	-1.1177	-1.1443	-1.1709	-1.1975	-1.2242	-1.2508	-1.2774	-3.6
-0.9846	-1.0113	-1.0379	-1.0645	-1.0911	-1.1177	-1.1443	-1.1709	-1.1975	-1.2242	-1.2508	-1.2774	-1.3040	-3.8
-1.0113	-1.0379	-1.0645	-1.0911	-1.1177	-1.1443	-1.1709	-1.1975	-1.2242	-1.2508	-1.2774	-1.3040	-1.3306	-4.0
-1.0379	-1.0645	-1.0911	-1.1177	-1.1443	-1.1709	-1.1975	-1.2242	-1.2508	-1.2774	-1.3040	-1.3306	-1.3572	-4.2
-1.0645	-1.0911	-1.1177	-1.1443	-1.1709	-1.1975	-1.2242	-1.2508	-1.2774	-1.3040	-1.3306	-1.3572	-1.3838	-4.4
-1.0911	-1.1177	-1.1443	-1.1709	-1.1975	-1.2242	-1.2508	-1.2774	-1.3040	-1.3306	-1.3572	-1.3838	-1.4104	-4.6
-1.1177	-1.1443	-1.1709	-1.1975	-1.2242	-1.2508	-1.2774	-1.3040	-1.3306	-1.3572	-1.3838	-1.4104	-1.4370	-4.8
-1.1443	-1.1709	-1.1975	-1.2242	-1.2508	-1.2774	-1.3040	-1.3306	-1.3572	-1.3838	-1.4104	-1.4370	-1.4637	-5.0
-1.1709	-1.1975	-1.2242	-1.2508	-1.2774	-1.3040	-1.3306	-1.3572	-1.3838	-1.4104	-1.4370	-1.4637	-1.4903	-5.2
-1.1975	-1.2242	-1.2508	-1.2774	-1.3040	-1.3306	-1.3572	-1.3838	-1.4104	-1.4370	-1.4637	-1.4903	-1.5169	-5.4
-1.2242	-1.2508	-1.2774	-1.3040	-1.3306	-1.3572	-1.3838	-1.4104	-1.4370	-1.4637	-1.4903	-1.5169	-1.5435	-5.6
-1.2508	-1.2774	-1.3040	-1.3306	-1.3572	-1.3838	-1.4104	-1.4370	-1.4637	-1.4903	-1.5169	-1.5435	-1.5701	-5.8
-1.2774	-1.3040	-1.3306	-1.3572	-1.3838	-1.4104	-1.4370	-1.4637	-1.4903	-1.5169	-1.5435	-1.5701	-1.5967	-6.0

PANEL 1 of 3

x_L \ x_H	0.0	0.1	0.2	0.3	0.4	0.5	0.6	0.7	0.8	0.9	1.0	1.1	1.2	1.3
0.0	0.0000	0.0133	0.0266	0.0399	0.0532	0.0665	0.0798	0.0931	0.1064	0.1198	0.1331	0.1464	0.1597	0.1730
-0.1	-0.0133	0.0000	0.0133	0.0266	0.0399	0.0532	0.0665	0.0798	0.0931	0.1064	0.1198	0.1331	0.1464	0.1597
-0.2	-0.0266	-0.0133	0.0000	0.0133	0.0266	0.0399	0.0532	0.0665	0.0798	0.0931	0.1064	0.1198	0.1331	0.1464
-0.3	-0.0399	-0.0266	-0.0133	0.0000	0.0133	0.0266	0.0399	0.0532	0.0665	0.0798	0.0931	0.1064	0.1198	0.1331
-0.4	-0.0532	-0.0399	-0.0266	-0.0133	0.0000	0.0133	0.0266	0.0399	0.0532	0.0665	0.0798	0.0931	0.1064	0.1198
-0.5	-0.0665	-0.0532	-0.0399	-0.0266	-0.0133	0.0000	0.0133	0.0266	0.0399	0.0532	0.0665	0.0798	0.0931	0.1064
-0.6	-0.0798	-0.0665	-0.0532	-0.0399	-0.0266	-0.0133	0.0000	0.0133	0.0266	0.0399	0.0532	0.0665	0.0798	0.0931
-0.7	-0.0931	-0.0798	-0.0665	-0.0532	-0.0399	-0.0266	-0.0133	0.0000	0.0133	0.0266	0.0399	0.0532	0.0665	0.0798
-0.8	-0.1064	-0.0931	-0.0798	-0.0665	-0.0532	-0.0399	-0.0266	-0.0133	0.0000	0.0133	0.0266	0.0399	0.0532	0.0665
-0.9	-0.1198	-0.1064	-0.0931	-0.0798	-0.0665	-0.0532	-0.0399	-0.0266	-0.0133	0.0000	0.0133	0.0266	0.0399	0.0532
-1.0	-0.1331	-0.1198	-0.1064	-0.0931	-0.0798	-0.0665	-0.0532	-0.0399	-0.0266	-0.0133	0.0000	0.0133	0.0266	0.0399
-1.1	-0.1464	-0.1331	-0.1198	-0.1064	-0.0931	-0.0798	-0.0665	-0.0532	-0.0399	-0.0266	-0.0133	0.0000	0.0133	0.0266
-1.2	-0.1597	-0.1464	-0.1331	-0.1198	-0.1064	-0.0931	-0.0798	-0.0665	-0.0532	-0.0399	-0.0266	-0.0133	0.0000	0.0133
-1.3	-0.1730	-0.1597	-0.1464	-0.1331	-0.1198	-0.1064	-0.0931	-0.0798	-0.0665	-0.0532	-0.0399	-0.0266	-0.0133	0.0000
-1.4	-0.1863	-0.1730	-0.1597	-0.1464	-0.1331	-0.1198	-0.1064	-0.0931	-0.0798	-0.0665	-0.0532	-0.0399	-0.0266	-0.0133
-1.5	-0.1996	-0.1863	-0.1730	-0.1597	-0.1464	-0.1331	-0.1198	-0.1064	-0.0931	-0.0798	-0.0665	-0.0532	-0.0399	-0.0266
-1.6	-0.2129	-0.1996	-0.1863	-0.1730	-0.1597	-0.1464	-0.1331	-0.1198	-0.1064	-0.0931	-0.0798	-0.0665	-0.0532	-0.0399
-1.7	-0.2262	-0.2129	-0.1996	-0.1863	-0.1730	-0.1597	-0.1464	-0.1331	-0.1198	-0.1064	-0.0931	-0.0798	-0.0665	-0.0532
-1.8	-0.2395	-0.2262	-0.2129	-0.1996	-0.1863	-0.1730	-0.1597	-0.1464	-0.1331	-0.1198	-0.1064	-0.0931	-0.0798	-0.0665
-1.9	-0.2528	-0.2395	-0.2262	-0.2129	-0.1996	-0.1863	-0.1730	-0.1597	-0.1464	-0.1331	-0.1198	-0.1064	-0.0931	-0.0798
-2.0	-0.2661	-0.2528	-0.2395	-0.2262	-0.2129	-0.1996	-0.1863	-0.1730	-0.1597	-0.1464	-0.1331	-0.1198	-0.1064	-0.0931
-2.1	-0.2794	-0.2661	-0.2528	-0.2395	-0.2262	-0.2129	-0.1996	-0.1863	-0.1730	-0.1597	-0.1464	-0.1331	-0.1198	-0.1064
-2.2	-0.2927	-0.2794	-0.2661	-0.2528	-0.2395	-0.2262	-0.2129	-0.1996	-0.1863	-0.1730	-0.1597	-0.1464	-0.1331	-0.1198
-2.3	-0.3060	-0.2927	-0.2794	-0.2661	-0.2528	-0.2395	-0.2262	-0.2129	-0.1996	-0.1863	-0.1730	-0.1597	-0.1464	-0.1331
-2.4	-0.3193	-0.3060	-0.2927	-0.2794	-0.2661	-0.2528	-0.2395	-0.2262	-0.2129	-0.1996	-0.1863	-0.1730	-0.1597	-0.1464
-2.5	-0.3327	-0.3193	-0.3060	-0.2927	-0.2794	-0.2661	-0.2528	-0.2395	-0.2262	-0.2129	-0.1996	-0.1863	-0.1730	-0.1597
-2.6	-0.3460	-0.3327	-0.3193	-0.3060	-0.2927	-0.2794	-0.2661	-0.2528	-0.2395	-0.2262	-0.2129	-0.1996	-0.1863	-0.1730
-2.7	-0.3593	-0.3460	-0.3327	-0.3193	-0.3060	-0.2927	-0.2794	-0.2661	-0.2528	-0.2395	-0.2262	-0.2129	-0.1996	-0.1863
-2.8	-0.3726	-0.3593	-0.3460	-0.3327	-0.3193	-0.3060	-0.2927	-0.2794	-0.2661	-0.2528	-0.2395	-0.2262	-0.2129	-0.1996
-2.9	-0.3859	-0.3726	-0.3593	-0.3460	-0.3327	-0.3193	-0.3060	-0.2927	-0.2794	-0.2661	-0.2528	-0.2395	-0.2262	-0.2129
-3.0	-0.3992	-0.3859	-0.3726	-0.3593	-0.3460	-0.3327	-0.3193	-0.3060	-0.2927	-0.2794	-0.2661	-0.2528	-0.2395	-0.2262
-3.2	-0.4258	-0.4125	-0.3992	-0.3859	-0.3726	-0.3593	-0.3460	-0.3327	-0.3193	-0.3060	-0.2927	-0.2794	-0.2661	-0.2528
-3.4	-0.4524	-0.4391	-0.4258	-0.4125	-0.3992	-0.3859	-0.3726	-0.3593	-0.3460	-0.3327	-0.3193	-0.3060	-0.2927	-0.2794
-3.6	-0.4790	-0.4657	-0.4524	-0.4391	-0.4258	-0.4125	-0.3992	-0.3859	-0.3726	-0.3593	-0.3460	-0.3327	-0.3193	-0.3060
-3.8	-0.5056	-0.4923	-0.4790	-0.4657	-0.4524	-0.4391	-0.4258	-0.4125	-0.3992	-0.3859	-0.3726	-0.3593	-0.3460	-0.3327
-4.0	-0.5322	-0.5189	-0.5056	-0.4923	-0.4790	-0.4657	-0.4524	-0.4391	-0.4258	-0.4125	-0.3992	-0.3859	-0.3726	-0.3593
-4.2	-0.5589	-0.5455	-0.5322	-0.5189	-0.5056	-0.4923	-0.4790	-0.4657	-0.4524	-0.4391	-0.4258	-0.4125	-0.3992	-0.3859
-4.4	-0.5855	-0.5722	-0.5589	-0.5455	-0.5322	-0.5189	-0.5056	-0.4923	-0.4790	-0.4657	-0.4524	-0.4391	-0.4258	-0.4125
-4.6	-0.6121	-0.5988	-0.5855	-0.5722	-0.5589	-0.5455	-0.5322	-0.5189	-0.5056	-0.4923	-0.4790	-0.4657	-0.4524	-0.4391
-4.8	-0.6387	-0.6254	-0.6121	-0.5988	-0.5855	-0.5722	-0.5589	-0.5455	-0.5322	-0.5189	-0.5056	-0.4923	-0.4790	-0.4657
-5.0	-0.6653	-0.6520	-0.6387	-0.6254	-0.6121	-0.5988	-0.5855	-0.5722	-0.5589	-0.5455	-0.5322	-0.5189	-0.5056	-0.4923
-5.2	-0.6919	-0.6786	-0.6653	-0.6520	-0.6387	-0.6254	-0.6121	-0.5988	-0.5855	-0.5722	-0.5589	-0.5455	-0.5322	-0.5189
-5.4	-0.7185	-0.7052	-0.6919	-0.6786	-0.6653	-0.6520	-0.6387	-0.6254	-0.6121	-0.5988	-0.5855	-0.5722	-0.5589	-0.5455
-5.6	-0.7451	-0.7318	-0.7185	-0.7052	-0.6919	-0.6786	-0.6653	-0.6520	-0.6387	-0.6254	-0.6121	-0.5988	-0.5855	-0.5722
-5.8	-0.7717	-0.7584	-0.7451	-0.7318	-0.7185	-0.7052	-0.6919	-0.6786	-0.6653	-0.6520	-0.6387	-0.6254	-0.6121	-0.5988
-6.0	-0.7984	-0.7851	-0.7717	-0.7584	-0.7451	-0.7318	-0.7185	-0.7052	-0.6919	-0.6786	-0.6653	-0.6520	-0.6387	-0.6254

APPENDIX B
PAGE 34 - PANEL 2 of 3

TABLE B-6D. MEAN BEARING ERROR, $\overline{X}$ - QUADRANT IV

1.4	1.5	1.6	1.7	1.8	1.9	2.0	2.1	2.2	2.3	2.4	2.5	2.6	2.7	2.8	2.9	3.0	3.2	3.4	3.6
0.1863	0.1996	0.2129	0.2262	0.2395	0.2528	0.2661	0.2794	0.2927	0.3060	0.3193	0.3327	0.3460	0.3593	0.3726	0.3859	0.3992	0.4258	0.4524	0.4790
0.1730	0.1863	0.1996	0.2129	0.2262	0.2395	0.2528	0.2661	0.2794	0.2927	0.3060	0.3193	0.3327	0.3460	0.3593	0.3726	0.3859	0.4125	0.4391	0.4657
0.1597	0.1730	0.1863	0.1996	0.2129	0.2262	0.2395	0.2528	0.2661	0.2794	0.2927	0.3060	0.3193	0.3327	0.3460	0.3593	0.3726	0.3992	0.4258	0.4524
0.1464	0.1597	0.1730	0.1863	0.1996	0.2129	0.2262	0.2395	0.2528	0.2661	0.2794	0.2927	0.3060	0.3193	0.3327	0.3460	0.3593	0.3859	0.4125	0.4391
0.1331	0.1464	0.1597	0.1730	0.1863	0.1996	0.2129	0.2262	0.2395	0.2528	0.2661	0.2794	0.2927	0.3060	0.3193	0.3327	0.3460	0.3726	0.3992	0.4258
0.1198	0.1331	0.1464	0.1597	0.1730	0.1863	0.1996	0.2129	0.2262	0.2395	0.2528	0.2661	0.2794	0.2927	0.3060	0.3193	0.3327	0.3593	0.3859	0.4125
0.1064	0.1198	0.1331	0.1464	0.1597	0.1730	0.1863	0.1996	0.2129	0.2262	0.2395	0.2528	0.2661	0.2794	0.2927	0.3060	0.3193	0.3460	0.3726	0.3992
0.0931	0.1064	0.1198	0.1331	0.1464	0.1597	0.1730	0.1863	0.1996	0.2129	0.2262	0.2395	0.2528	0.2661	0.2794	0.2927	0.3060	0.3327	0.3593	0.3859
0.0798	0.0931	0.1064	0.1198	0.1331	0.1464	0.1597	0.1730	0.1863	0.1996	0.2129	0.2262	0.2395	0.2528	0.2661	0.2794	0.2927	0.3193	0.3460	0.3726
0.0665	0.0798	0.0931	0.1064	0.1198	0.1331	0.1464	0.1597	0.1730	0.1863	0.1996	0.2129	0.2262	0.2395	0.2528	0.2661	0.2794	0.3060	0.3327	0.3593
0.0532	0.0665	0.0798	0.0931	0.1064	0.1198	0.1331	0.1464	0.1597	0.1730	0.1863	0.1996	0.2129	0.2262	0.2395	0.2528	0.2661	0.2927	0.3193	0.3460
0.0399	0.0532	0.0665	0.0798	0.0931	0.1064	0.1198	0.1331	0.1464	0.1597	0.1730	0.1863	0.1996	0.2129	0.2262	0.2395	0.2528	0.2794	0.3060	0.3327
0.0266	0.0399	0.0532	0.0665	0.0798	0.0931	0.1064	0.1198	0.1331	0.1464	0.1597	0.1730	0.1863	0.1996	0.2129	0.2262	0.2395	0.2661	0.2927	0.3193
0.0133	0.0266	0.0399	0.0532	0.0665	0.0798	0.0931	0.1064	0.1198	0.1331	0.1464	0.1597	0.1730	0.1863	0.1996	0.2129	0.2262	0.2528	0.2794	0.3060
0.0000	0.0133	0.0266	0.0399	0.0532	0.0665	0.0798	0.0931	0.1064	0.1198	0.1331	0.1464	0.1597	0.1730	0.1863	0.1996	0.2129	0.2395	0.2661	0.2927
0.0133	0.0000	0.0133	0.0266	0.0399	0.0532	0.0665	0.0798	0.0931	0.1064	0.1198	0.1331	0.1464	0.1597	0.1730	0.1863	0.1996	0.2262	0.2528	0.2794
0.0266	-0.0133	0.0000	0.0133	0.0266	0.0399	0.0532	0.0665	0.0798	0.0931	0.1064	0.1198	0.1331	0.1464	0.1597	0.1730	0.1863	0.2129	0.2395	0.2661
0.0399	-0.0266	-0.0133	0.0000	0.0133	0.0266	0.0399	0.0532	0.0665	0.0798	0.0931	0.1064	0.1198	0.1331	0.1464	0.1597	0.1730	0.1996	0.2262	0.2528
0.0532	-0.0399	-0.0266	-0.0133	0.0000	0.0133	0.0266	0.0399	0.0532	0.0665	0.0798	0.0931	0.1064	0.1198	0.1331	0.1464	0.1597	0.1863	0.2129	0.2395
0.0665	-0.0532	-0.0399	-0.0266	-0.0133	0.0000	0.0133	0.0266	0.0399	0.0532	0.0665	0.0798	0.0931	0.1064	0.1198	0.1331	0.1464	0.1730	0.1996	0.2262
0.0798	-0.0665	-0.0532	-0.0399	-0.0266	-0.0133	0.0000	0.0133	0.0266	0.0399	0.0532	0.0665	0.0798	0.0931	0.1064	0.1198	0.1331	0.1597	0.1863	0.2129
0.0931	-0.0798	-0.0665	-0.0532	-0.0399	-0.0266	-0.0133	0.0000	0.0133	0.0266	0.0399	0.0532	0.0665	0.0798	0.0931	0.1064	0.1198	0.1464	0.1730	0.1996
0.1064	-0.0931	-0.0798	-0.0665	-0.0532	-0.0399	-0.0266	-0.0133	0.0000	0.0133	0.0266	0.0399	0.0532	0.0665	0.0798	0.0931	0.1064	0.1331	0.1597	0.1863
0.1198	-0.1064	-0.0931	-0.0798	-0.0665	-0.0532	-0.0399	-0.0266	-0.0133	0.0000	0.0133	0.0266	0.0399	0.0532	0.0665	0.0798	0.0931	0.1198	0.1464	0.1730
0.1331	-0.1198	-0.1064	-0.0931	-0.0798	-0.0665	-0.0532	-0.0399	-0.0266	-0.0133	0.0000	0.0133	0.0266	0.0399	0.0532	0.0665	0.0798	0.1064	0.1331	0.1597
0.1464	-0.1331	-0.1198	-0.1064	-0.0931	-0.0798	-0.0665	-0.0532	-0.0399	-0.0266	-0.0133	0.0000	0.0133	0.0266	0.0399	0.0532	0.0665	0.0931	0.1198	0.1464
0.1597	-0.1464	-0.1331	-0.1198	-0.1064	-0.0931	-0.0798	-0.0665	-0.0532	-0.0399	-0.0266	-0.0133	0.0000	0.0133	0.0266	0.0399	0.0532	0.0798	0.1064	0.1331
0.1730	-0.1597	-0.1464	-0.1331	-0.1198	-0.1064	-0.0931	-0.0798	-0.0665	-0.0532	-0.0399	-0.0266	-0.0133	0.0000	0.0133	0.0266	0.0399	0.0665	0.0931	0.1198
0.1863	-0.1730	-0.1597	-0.1464	-0.1331	-0.1198	-0.1064	-0.0931	-0.0798	-0.0665	-0.0532	-0.0399	-0.0266	-0.0133	0.0000	0.0133	0.0266	0.0532	0.0798	0.1064
0.1996	-0.1863	-0.1730	-0.1597	-0.1464	-0.1331	-0.1198	-0.1064	-0.0931	-0.0798	-0.0665	-0.0532	-0.0399	-0.0266	-0.0133	0.0000	0.0133	0.0399	0.0665	0.0931
0.2129	-0.1996	-0.1863	-0.1730	-0.1597	-0.1464	-0.1331	-0.1198	-0.1064	-0.0931	-0.0798	-0.0665	-0.0532	-0.0399	-0.0266	-0.0133	0.0000	0.0266	0.0532	0.0798
0.2395	-0.2262	-0.2129	-0.1996	-0.1863	-0.1730	-0.1597	-0.1464	-0.1331	-0.1198	-0.1064	-0.0931	-0.0798	-0.0665	-0.0532	-0.0399	-0.0266	0.0000	0.0266	0.0532
0.2661	-0.2528	-0.2395	-0.2262	-0.2129	-0.1996	-0.1863	-0.1730	-0.1597	-0.1464	-0.1331	-0.1198	-0.1064	-0.0931	-0.0798	-0.0665	-0.0532	-0.0266	0.0000	0.0266
0.2927	-0.2794	-0.2661	-0.2528	-0.2395	-0.2262	-0.2129	-0.1996	-0.1863	-0.1730	-0.1597	-0.1464	-0.1331	-0.1198	-0.1064	-0.0931	-0.0798	-0.0532	-0.0266	0.0000
0.3193	-0.3060	-0.2927	-0.2794	-0.2661	-0.2528	-0.2395	-0.2262	-0.2129	-0.1996	-0.1863	-0.1730	-0.1597	-0.1464	-0.1331	-0.1198	-0.1064	-0.0798	-0.0532	-0.0266
0.3460	-0.3327	-0.3193	-0.3060	-0.2927	-0.2794	-0.2661	-0.2528	-0.2395	-0.2262	-0.2129	-0.1996	-0.1863	-0.1730	-0.1597	-0.1464	-0.1331	-0.1064	-0.0798	-0.0532
0.3726	-0.3593	-0.3460	-0.3327	-0.3193	-0.3060	-0.2927	-0.2794	-0.2661	-0.2528	-0.2395	-0.2262	-0.2129	-0.1996	-0.1863	-0.1730	-0.1597	-0.1331	-0.1064	-0.0798
0.3992	-0.3859	-0.3726	-0.3593	-0.3460	-0.3327	-0.3193	-0.3060	-0.2927	-0.2794	-0.2661	-0.2528	-0.2395	-0.2262	-0.2129	-0.1996	-0.1863	-0.1597	-0.1331	-0.1064
0.4258	-0.4125	-0.3992	-0.3859	-0.3726	-0.3593	-0.3460	-0.3327	-0.3193	-0.3060	-0.2927	-0.2794	-0.2661	-0.2528	-0.2395	-0.2262	-0.2129	-0.1863	-0.1597	-0.1331
0.4524	-0.4391	-0.4258	-0.4125	-0.3992	-0.3859	-0.3726	-0.3593	-0.3460	-0.3327	-0.3193	-0.3060	-0.2927	-0.2794	-0.2661	-0.2528	-0.2395	-0.2129	-0.1863	-0.1597
0.4790	-0.4657	-0.4524	-0.4391	-0.4258	-0.4125	-0.3992	-0.3859	-0.3726	-0.3593	-0.3460	-0.3327	-0.3193	-0.3060	-0.2927	-0.2794	-0.2661	-0.2395	-0.2129	-0.1863
0.5056	-0.4923	-0.4790	-0.4657	-0.4524	-0.4391	-0.4258	-0.4125	-0.3992	-0.3859	-0.3726	-0.3593	-0.3460	-0.3327	-0.3193	-0.3060	-0.2927	-0.2661	-0.2395	-0.2129
0.5322	-0.5189	-0.5056	-0.4923	-0.4790	-0.4657	-0.4524	-0.4391	-0.4258	-0.4125	-0.3992	-0.3859	-0.3726	-0.3593	-0.3460	-0.3327	-0.3193	-0.2927	-0.2661	-0.2395
0.5589	-0.5455	-0.5322	-0.5189	-0.5056	-0.4923	-0.4790	-0.4657	-0.4524	-0.4391	-0.4258	-0.4125	-0.3992	-0.3859	-0.3726	-0.3593	-0.3460	-0.3193	-0.2927	-0.2661
0.5855	-0.5722	-0.5589	-0.5455	-0.5322	-0.5189	-0.5056	-0.4923	-0.4790	-0.4657	-0.4524	-0.4391	-0.4258	-0.4125	-0.3992	-0.3859	-0.3726	-0.3460	-0.3193	-0.2927
0.6121	-0.5988	-0.5855	-0.5722	-0.5589	-0.5455	-0.5322	-0.5189	-0.5056	-0.4923	-0.4790	-0.4657	-0.4524	-0.4391	-0.4258	-0.4125	-0.3992	-0.3726	-0.3460	-0.3193

APPENDIX B

PAGE 34 PANEL 3 of 3

3.6	3.8	4.0	4.2	4.4	4.6	4.8	5.0	5.2	5.4	5.6	5.8	6.0	x_H / x_L
0.4790	0.5056	0.5322	0.5589	0.5855	0.6121	0.6387	0.6653	0.6919	0.7185	0.7451	0.7717	0.7984	0.0
0.4657	0.4923	0.5189	0.5455	0.5722	0.5988	0.6254	0.6520	0.6786	0.7052	0.7318	0.7584	0.7851	- 0.1
0.4524	0.4790	0.5056	0.5322	0.5589	0.5855	0.6121	0.6387	0.6653	0.6919	0.7185	0.7451	0.7717	- 0.2
0.4391	0.4657	0.4923	0.5189	0.5455	0.5722	0.5988	0.6254	0.6520	0.6786	0.7052	0.7318	0.7584	- 0.3
0.4258	0.4524	0.4790	0.5056	0.5322	0.5589	0.5855	0.6121	0.6387	0.6653	0.6919	0.7185	0.7451	- 0.4
0.4125	0.4391	0.4657	0.4923	0.5189	0.5455	0.5722	0.5988	0.6254	0.6520	0.6786	0.7052	0.7318	- 0.5
0.3992	0.4258	0.4524	0.4790	0.5056	0.5322	0.5589	0.5855	0.6121	0.6387	0.6653	0.6919	0.7185	- 0.6
0.3859	0.4125	0.4391	0.4657	0.4923	0.5189	0.5455	0.5722	0.5988	0.6254	0.6520	0.6786	0.7052	- 0.7
0.3726	0.3992	0.4258	0.4524	0.4790	0.5056	0.5322	0.5589	0.5855	0.6121	0.6387	0.6653	0.6919	- 0.8
0.3593	0.3859	0.4125	0.4391	0.4657	0.4923	0.5189	0.5455	0.5722	0.5988	0.6254	0.6520	0.6786	- 0.9
0.3460	0.3726	0.3992	0.4258	0.4524	0.4790	0.5056	0.5322	0.5589	0.5855	0.6121	0.6387	0.6653	- 1.0
0.3327	0.3593	0.3859	0.4125	0.4391	0.4657	0.4923	0.5189	0.5455	0.5722	0.5988	0.6254	0.6520	- 1.1
0.3193	0.3460	0.3726	0.3992	0.4258	0.4524	0.4790	0.5056	0.5322	0.5589	0.5855	0.6121	0.6387	- 1.2
0.3060	0.3327	0.3593	0.3859	0.4125	0.4391	0.4657	0.4923	0.5189	0.5455	0.5722	0.5988	0.6254	- 1.3
0.2927	0.3193	0.3460	0.3726	0.3992	0.4258	0.4524	0.4790	0.5056	0.5322	0.5589	0.5855	0.6121	- 1.4
0.2794	0.3060	0.3327	0.3593	0.3859	0.4125	0.4391	0.4657	0.4923	0.5189	0.5455	0.5722	0.5988	- 1.5
0.2661	0.2927	0.3193	0.3460	0.3726	0.3992	0.4258	0.4524	0.4790	0.5056	0.5322	0.5589	0.5855	- 1.6
0.2528	0.2794	0.3060	0.3327	0.3593	0.3859	0.4125	0.4391	0.4657	0.4923	0.5189	0.5455	0.5722	- 1.7
0.2395	0.2661	0.2927	0.3193	0.3460	0.3726	0.3992	0.4258	0.4524	0.4790	0.5056	0.5322	0.5589	- 1.8
0.2262	0.2528	0.2794	0.3060	0.3327	0.3593	0.3859	0.4125	0.4391	0.4657	0.4923	0.5189	0.5455	- 1.9
0.2129	0.2395	0.2661	0.2927	0.3193	0.3460	0.3726	0.3992	0.4258	0.4524	0.4790	0.5056	0.5322	- 2.0
0.1996	0.2262	0.2528	0.2794	0.3060	0.3327	0.3593	0.3859	0.4125	0.4391	0.4657	0.4923	0.5189	- 2.1
0.1863	0.2129	0.2395	0.2661	0.2927	0.3193	0.3460	0.3726	0.3992	0.4258	0.4524	0.4790	0.5056	- 2.2
0.1730	0.1996	0.2262	0.2528	0.2794	0.3060	0.3327	0.3593	0.3859	0.4125	0.4391	0.4657	0.4923	- 2.3
0.1597	0.1863	0.2129	0.2395	0.2661	0.2927	0.3193	0.3460	0.3726	0.3992	0.4258	0.4524	0.4790	- 2.4
0.1464	0.1730	0.1996	0.2262	0.2528	0.2794	0.3060	0.3327	0.3593	0.3859	0.4125	0.4391	0.4657	- 2.5
0.1331	0.1597	0.1863	0.2129	0.2395	0.2661	0.2927	0.3193	0.3460	0.3726	0.3992	0.4258	0.4524	- 2.6
0.1198	0.1464	0.1730	0.1996	0.2262	0.2528	0.2794	0.3060	0.3327	0.3593	0.3859	0.4125	0.4391	- 2.7
0.1064	0.1331	0.1597	0.1863	0.2129	0.2395	0.2661	0.2927	0.3193	0.3460	0.3726	0.3992	0.4258	- 2.8
0.0931	0.1198	0.1464	0.1730	0.1996	0.2262	0.2528	0.2794	0.3060	0.3327	0.3593	0.3859	0.4125	- 2.9
0.0798	0.1064	0.1331	0.1597	0.1863	0.2129	0.2395	0.2661	0.2927	0.3193	0.3460	0.3726	0.3992	- 3.0
0.0532	0.0798	0.1064	0.1331	0.1597	0.1863	0.2129	0.2395	0.2661	0.2927	0.3193	0.3460	0.3726	- 3.2
0.0266	0.0532	0.0798	0.1064	0.1331	0.1597	0.1863	0.2129	0.2395	0.2661	0.2927	0.3193	0.3460	- 3.4
0.0000	0.0266	0.0532	0.0798	0.1064	0.1331	0.1597	0.1863	0.2129	0.2395	0.2661	0.2927	0.3193	- 3.6
-0.0266	0.0000	0.0266	0.0532	0.0798	0.1064	0.1331	0.1597	0.1863	0.2129	0.2395	0.2661	0.2927	- 3.8
-0.0532	-0.0266	0.0000	0.0266	0.0532	0.0798	0.1064	0.1331	0.1597	0.1863	0.2129	0.2395	0.2661	- 4.0
-0.0798	-0.0532	-0.0266	0.0000	0.0266	0.0532	0.0798	0.1064	0.1331	0.1597	0.1863	0.2129	0.2395	- 4.2
-0.1064	-0.0798	-0.0532	-0.0266	0.0000	0.0266	0.0532	0.0798	0.1064	0.1331	0.1597	0.1863	0.2129	- 4.4
-0.1331	-0.1064	-0.0798	-0.0532	-0.0266	0.0000	0.0266	0.0532	0.0798	0.1064	0.1331	0.1597	0.1863	- 4.6
-0.1597	-0.1331	-0.1064	-0.0798	-0.0532	-0.0266	0.0000	0.0266	0.0532	0.0798	0.1064	0.1331	0.1597	- 4.8
-0.1863	-0.1597	-0.1331	-0.1064	-0.0798	-0.0532	-0.0266	0.0000	0.0266	0.0532	0.0798	0.1064	0.1331	- 5.0
-0.2129	-0.1863	-0.1597	-0.1331	-0.1064	-0.0798	-0.0532	-0.0266	0.0000	0.0266	0.0532	0.0798	0.1064	- 5.2
-0.2395	-0.2129	-0.1863	-0.1597	-0.1331	-0.1064	-0.0798	-0.0532	-0.0266	0.0000	0.0266	0.0532	0.0798	- 5.4
-0.2661	-0.2395	-0.2129	-0.1863	-0.1597	-0.1331	-0.1064	-0.0798	-0.0532	-0.0266	0.0000	0.0266	0.0532	- 5.6
-0.2927	-0.2661	-0.2395	-0.2129	-0.1863	-0.1597	-0.1331	-0.1064	-0.0798	-0.0532	-0.0266	0.0000	0.0266	- 5.8
-0.3193	-0.2927	-0.2661	-0.2395	-0.2129	-0.1863	-0.1597	-0.1331	-0.1064	-0.0798	-0.0532	-0.0266	0.0000	- 6.0

APPENDIX B

PAGE 35 - PANEL 1 of 3

x_L \ x_H	0.0	0.1	0.2	0.3	0.4	0.5	0.6	0.7	0.8	0.9	1.0	1.1	1.2
0.0	0.0000	0.0004	0.0015	0.0034	0.0061	0.0095	0.0136	0.0185	0.0242	0.0307	0.0379	0.0458	0.0545
0.1	0.0004	0.0004	0.0012	0.0027	0.0050	0.0081	0.0119	0.0164	0.0218	0.0279	0.0347	0.0423	0.0506
0.2	0.0015	0.0012	0.0016	0.0028	0.0047	0.0074	0.0109	0.0151	0.0201	0.0258	0.0323	0.0395	0.0475
0.3	0.0034	0.0027	0.0028	0.0036	0.0052	0.0076	0.0107	0.0145	0.0191	0.0245	0.0306	0.0375	0.0452
0.4	0.0061	0.0050	0.0047	0.0052	0.0064	0.0084	0.0112	0.0147	0.0190	0.0240	0.0297	0.0363	0.0436
0.5	0.0095	0.0081	0.0074	0.0076	0.0084	0.0101	0.0125	0.0156	0.0195	0.0242	0.0296	0.0358	0.0427
0.6	0.0136	0.0119	0.0109	0.0107	0.0112	0.0125	0.0145	0.0173	0.0209	0.0252	0.0302	0.0361	0.0426
0.7	0.0185	0.0164	0.0151	0.0145	0.0147	0.0156	0.0173	0.0197	0.0229	0.0269	0.0316	0.0371	0.0433
0.8	0.0242	0.0218	0.0201	0.0191	0.0190	0.0195	0.0209	0.0229	0.0258	0.0294	0.0338	0.0389	0.0447
0.9	0.0307	0.0279	0.0258	0.0245	0.0240	0.0242	0.0252	0.0269	0.0294	0.0326	0.0366	0.0414	0.0469
1.0	0.0379	0.0347	0.0323	0.0306	0.0297	0.0296	0.0302	0.0316	0.0338	0.0366	0.0403	0.0447	0.0499
1.1	0.0458	0.0423	0.0395	0.0375	0.0363	0.0358	0.0361	0.0371	0.0389	0.0414	0.0447	0.0488	0.0536
1.2	0.0545	0.0506	0.0475	0.0452	0.0436	0.0427	0.0426	0.0433	0.0447	0.0469	0.0499	0.0536	0.0580
1.3	0.0640	0.0598	0.0563	0.0536	0.0516	0.0504	0.0500	0.0503	0.0514	0.0532	0.0558	0.0591	0.0632
1.4	0.0742	0.0696	0.0658	0.0627	0.0604	0.0589	0.0581	0.0580	0.0588	0.0602	0.0625	0.0655	0.0692
1.5	0.0852	0.0802	0.0761	0.0726	0.0700	0.0681	0.0669	0.0665	0.0669	0.0680	0.0699	0.0726	0.0759
1.6	0.0969	0.0916	0.0871	0.0833	0.0803	0.0780	0.0765	0.0758	0.0758	0.0766	0.0781	0.0804	0.0834
1.7	0.1094	0.1038	0.0989	0.0947	0.0914	0.0888	0.0869	0.0858	0.0855	0.0859	0.0871	0.0890	0.0917
1.8	0.1227	0.1167	0.1114	0.1069	0.1032	0.1002	0.0980	0.0966	0.0959	0.0959	0.0968	0.0983	0.1007
1.9	0.1367	0.1303	0.1247	0.1199	0.1158	0.1125	0.1099	0.1081	0.1071	0.1068	0.1072	0.1085	0.1104
2.0	0.1514	0.1447	0.1388	0.1336	0.1291	0.1255	0.1226	0.1204	0.1190	0.1183	0.1185	0.1193	0.1209
2.1	0.1669	0.1599	0.1536	0.1480	0.1433	0.1392	0.1360	0.1334	0.1317	0.1307	0.1304	0.1309	0.1322
2.2	0.1832	0.1758	0.1692	0.1633	0.1581	0.1537	0.1501	0.1472	0.1451	0.1438	0.1432	0.1433	0.1442
2.3	0.2003	0.1925	0.1855	0.1792	0.1737	0.1690	0.1650	0.1618	0.1593	0.1576	0.1567	0.1565	0.1570
2.4	0.2180	0.2099	0.2026	0.1960	0.1901	0.1850	0.1807	0.1771	0.1743	0.1722	0.1709	0.1704	0.1706
2.5	0.2366	0.2281	0.2204	0.2134	0.2072	0.2018	0.1971	0.1932	0.1900	0.1876	0.1859	0.1850	0.1849
2.6	0.2559	0.2471	0.2390	0.2317	0.2251	0.2193	0.2143	0.2100	0.2065	0.2037	0.2017	0.2004	0.1999
2.7	0.2760	0.2668	0.2584	0.2507	0.2438	0.2376	0.2322	0.2276	0.2237	0.2206	0.2182	0.2166	0.2157
2.8	0.2968	0.2872	0.2785	0.2704	0.2632	0.2567	0.2509	0.2459	0.2417	0.2382	0.2355	0.2335	0.2323
2.9	0.3184	0.3085	0.2993	0.2910	0.2833	0.2765	0.2704	0.2650	0.2604	0.2566	0.2535	0.2512	0.2496
3.0	0.3407	0.3305	0.3210	0.3122	0.3043	0.2970	0.2906	0.2849	0.2799	0.2758	0.2723	0.2696	0.2677
3.2	0.3876	0.3767	0.3665	0.3570	0.3484	0.3404	0.3333	0.3269	0.3212	0.3163	0.3122	0.3088	0.3062
3.4	0.4376	0.4259	0.4150	0.4049	0.3955	0.3869	0.3790	0.3719	0.3655	0.3599	0.3551	0.3510	0.3476
3.6	0.4906	0.4782	0.4666	0.4558	0.4457	0.4363	0.4277	0.4199	0.4128	0.4065	0.4010	0.3962	0.3921
3.8	0.5466	0.5335	0.5212	0.5097	0.4989	0.4888	0.4795	0.4710	0.4632	0.4562	0.4499	0.4444	0.4397
4.0	0.6057	0.5919	0.5789	0.5666	0.5551	0.5443	0.5343	0.5251	0.5166	0.5089	0.5019	0.4957	0.4902
4.2	0.6678	0.6533	0.6395	0.6266	0.6143	0.6029	0.5922	0.5822	0.5730	0.5646	0.5569	0.5500	0.5438
4.4	0.7329	0.7177	0.7032	0.6895	0.6766	0.6644	0.6530	0.6424	0.6325	0.6233	0.6149	0.6073	0.6004
4.6	0.8010	0.7851	0.7699	0.7556	0.7419	0.7290	0.7169	0.7055	0.6949	0.6851	0.6760	0.6676	0.6601
4.8	0.8722	0.8556	0.8397	0.8246	0.8102	0.7967	0.7838	0.7718	0.7604	0.7499	0.7401	0.7310	0.7227
5.0	0.9464	0.9290	0.9125	0.8967	0.8816	0.8673	0.8538	0.8410	0.8290	0.8177	0.8072	0.7974	0.7884
5.2	1.0236	1.0056	0.9883	0.9718	0.9560	0.9410	0.9267	0.9133	0.9005	0.8885	0.8773	0.8669	0.8572
5.4	1.1039	1.0851	1.0671	1.0499	1.0334	1.0177	1.0028	0.9886	0.9751	0.9624	0.9505	0.9393	0.9289
5.6	1.1871	1.1677	1.1490	1.1311	1.1139	1.0974	1.0818	1.0669	1.0527	1.0393	1.0267	1.0148	1.0037
5.8	1.2734	1.2533	1.2339	1.2152	1.1973	1.1802	1.1638	1.1482	1.1334	1.1193	1.1059	1.0933	1.0815
6.0	1.3628	1.3419	1.3218	1.3025	1.2839	1.2660	1.2489	1.2326	1.2170	1.2022	1.1882	1.1749	1.1623

APPENDIX B
PAGE 35 - PANEL 2 of 3

TABLE B-6E. BEARING ERROR VARIANCE, S^2 - QUADRANTS I AND III

1.3	1.4	1.5	1.6	1.7	1.8	1.9	2.0	2.1	2.2	2.3	2.4	2.5	2.6	2.7	2.8	2.9	3.0	3.2	3.4
0.0640	0.0742	0.0852	0.0969	0.1094	0.1227	0.1367	0.1514	0.1669	0.1832	0.2003	0.2180	0.2366	0.2559	0.2760	0.2968	0.3184	0.3407	0.3876	0.4376
0.0598	0.0696	0.0802	0.0916	0.1038	0.1167	0.1303	0.1447	0.1599	0.1758	0.1925	0.2099	0.2281	0.2471	0.2668	0.2872	0.3085	0.3305	0.3767	0.4259
0.0563	0.0658	0.0761	0.0871	0.0989	0.1114	0.1247	0.1388	0.1536	0.1692	0.1855	0.2026	0.2204	0.2390	0.2584	0.2785	0.2993	0.3210	0.3665	0.4150
0.0536	0.0627	0.0726	0.0833	0.0947	0.1069	0.1199	0.1336	0.1480	0.1633	0.1792	0.1960	0.2134	0.2317	0.2507	0.2704	0.2910	0.3122	0.3570	0.4049
0.0516	0.0604	0.0700	0.0803	0.0914	0.1032	0.1158	0.1291	0.1433	0.1581	0.1737	0.1901	0.2072	0.2251	0.2438	0.2632	0.2833	0.3043	0.3484	0.3955
0.0504	0.0589	0.0681	0.0780	0.0888	0.1002	0.1125	0.1255	0.1392	0.1537	0.1690	0.1850	0.2018	0.2193	0.2376	0.2567	0.2765	0.2970	0.3404	0.3869
0.0500	0.0581	0.0669	0.0765	0.0869	0.0980	0.1099	0.1226	0.1360	0.1501	0.1650	0.1807	0.1971	0.2143	0.2322	0.2509	0.2704	0.2906	0.3333	0.3790
0.0503	0.0580	0.0665	0.0758	0.0858	0.0966	0.1081	0.1204	0.1334	0.1472	0.1618	0.1771	0.1932	0.2100	0.2276	0.2459	0.2650	0.2849	0.3269	0.3719
0.0514	0.0588	0.0669	0.0758	0.0855	0.0959	0.1071	0.1190	0.1317	0.1451	0.1593	0.1743	0.1900	0.2065	0.2237	0.2417	0.2604	0.2799	0.3212	0.3655
0.0532	0.0602	0.0680	0.0766	0.0859	0.0959	0.1068	0.1183	0.1307	0.1438	0.1576	0.1722	0.1876	0.2037	0.2206	0.2382	0.2566	0.2758	0.3163	0.3599
0.0558	0.0625	0.0699	0.0781	0.0871	0.0968	0.1072	0.1185	0.1304	0.1432	0.1567	0.1709	0.1859	0.2017	0.2182	0.2355	0.2535	0.2723	0.3122	0.3551
0.0591	0.0655	0.0726	0.0804	0.0890	0.0983	0.1085	0.1193	0.1309	0.1433	0.1565	0.1704	0.1850	0.2004	0.2166	0.2335	0.2512	0.2696	0.3088	0.3510
0.0632	0.0692	0.0759	0.0834	0.0917	0.1007	0.1104	0.1209	0.1322	0.1442	0.1570	0.1706	0.1849	0.1999	0.2157	0.2323	0.2496	0.2677	0.3062	0.3476
0.0681	0.0737	0.0801	0.0872	0.0951	0.1038	0.1132	0.1233	0.1342	0.1459	0.1584	0.1715	0.1855	0.2002	0.2156	0.2319	0.2488	0.2666	0.3043	0.3451
0.0737	0.0790	0.0850	0.0918	0.0993	0.1076	0.1167	0.1265	0.1370	0.1484	0.1604	0.1733	0.1869	0.2012	0.2163	0.2322	0.2488	0.2662	0.3032	0.3432
0.0801	0.0850	0.0907	0.0971	0.1043	0.1122	0.1209	0.1304	0.1406	0.1515	0.1633	0.1757	0.1890	0.2030	0.2177	0.2332	0.2495	0.2665	0.3028	0.3422
0.0872	0.0918	0.0971	0.1032	0.1100	0.1176	0.1259	0.1350	0.1449	0.1555	0.1669	0.1790	0.1919	0.2055	0.2199	0.2351	0.2510	0.2676	0.3032	0.3419
0.0951	0.0993	0.1043	0.1100	0.1165	0.1237	0.1317	0.1404	0.1499	0.1602	0.1712	0.1830	0.1955	0.2088	0.2228	0.2376	0.2532	0.2695	0.3044	0.3423
0.1038	0.1076	0.1122	0.1176	0.1237	0.1306	0.1382	0.1466	0.1557	0.1656	0.1763	0.1877	0.1999	0.2128	0.2265	0.2410	0.2562	0.2721	0.3063	0.3435
0.1132	0.1167	0.1209	0.1259	0.1317	0.1382	0.1455	0.1535	0.1623	0.1719	0.1822	0.1932	0.2051	0.2176	0.2310	0.2451	0.2599	0.2755	0.3090	0.3455
0.1233	0.1265	0.1304	0.1350	0.1404	0.1466	0.1535	0.1612	0.1696	0.1788	0.1888	0.1995	0.2110	0.2232	0.2362	0.2499	0.2644	0.2797	0.3124	0.3482
0.1342	0.1370	0.1406	0.1449	0.1499	0.1557	0.1623	0.1696	0.1777	0.1866	0.1962	0.2065	0.2176	0.2295	0.2421	0.2555	0.2697	0.2846	0.3166	0.3517
0.1459	0.1484	0.1515	0.1555	0.1602	0.1656	0.1719	0.1788	0.1866	0.1951	0.2043	0.2143	0.2251	0.2366	0.2488	0.2619	0.2757	0.2902	0.3216	0.3560
0.1584	0.1604	0.1633	0.1669	0.1712	0.1763	0.1822	0.1888	0.1962	0.2043	0.2132	0.2226	0.2332	0.2444	0.2563	0.2690	0.2824	0.2966	0.3273	0.3610
0.1715	0.1733	0.1757	0.1790	0.1830	0.1877	0.1932	0.1995	0.2065	0.2143	0.2228	0.2321	0.2422	0.2530	0.2646	0.2769	0.2900	0.3038	0.3337	0.3667
0.1855	0.1869	0.1890	0.1919	0.1955	0.1999	0.2051	0.2110	0.2176	0.2251	0.2332	0.2422	0.2519	0.2623	0.2735	0.2855	0.2982	0.3117	0.3410	0.3732
0.2002	0.2012	0.2030	0.2055	0.2088	0.2128	0.2176	0.2232	0.2295	0.2366	0.2444	0.2530	0.2623	0.2724	0.2833	0.2949	0.3073	0.3204	0.3489	0.3805
0.2156	0.2163	0.2177	0.2199	0.2228	0.2265	0.2310	0.2362	0.2421	0.2488	0.2563	0.2646	0.2735	0.2833	0.2938	0.3050	0.3171	0.3298	0.3577	0.3885
0.2319	0.2322	0.2332	0.2351	0.2376	0.2410	0.2451	0.2499	0.2555	0.2619	0.2690	0.2769	0.2855	0.2949	0.3050	0.3160	0.3276	0.3400	0.3671	0.3973
0.2488	0.2488	0.2495	0.2510	0.2532	0.2562	0.2599	0.2644	0.2697	0.2757	0.2824	0.2900	0.2982	0.3073	0.3171	0.3276	0.3389	0.3510	0.3774	0.4068
0.2666	0.2662	0.2665	0.2676	0.2695	0.2721	0.2755	0.2797	0.2846	0.2902	0.2966	0.3038	0.3117	0.3204	0.3298	0.3400	0.3510	0.3627	0.3884	0.4171
0.3043	0.3032	0.3028	0.3032	0.3044	0.3063	0.3090	0.3124	0.3166	0.3216	0.3273	0.3337	0.3410	0.3489	0.3577	0.3671	0.3774	0.3884	0.4127	0.4400
0.3451	0.3432	0.3422	0.3419	0.3423	0.3435	0.3455	0.3482	0.3517	0.3560	0.3610	0.3667	0.3732	0.3805	0.3885	0.3973	0.4068	0.4171	0.4400	0.4659
0.3889	0.3863	0.3846	0.3835	0.3833	0.3838	0.3851	0.3871	0.3898	0.3934	0.3977	0.4027	0.4085	0.4151	0.4224	0.4305	0.4393	0.4489	0.4703	0.4948
0.4357	0.4324	0.4300	0.4282	0.4273	0.4271	0.4276	0.4289	0.4310	0.4338	0.4374	0.4417	0.4468	0.4527	0.4593	0.4666	0.4748	0.4836	0.5037	0.5267
0.4855	0.4816	0.4784	0.4760	0.4743	0.4734	0.4732	0.4738	0.4752	0.4773	0.4802	0.4838	0.4882	0.4933	0.4992	0.5059	0.5133	0.5215	0.5401	0.5617
0.5384	0.5337	0.5299	0.5267	0.5243	0.5227	0.5218	0.5217	0.5224	0.5238	0.5260	0.5289	0.5326	0.5370	0.5422	0.5481	0.5548	0.5623	0.5795	0.5997
0.5943	0.5889	0.5843	0.5805	0.5774	0.5751	0.5735	0.5727	0.5726	0.5733	0.5748	0.5770	0.5800	0.5837	0.5882	0.5934	0.5994	0.6062	0.6219	0.6407
0.6532	0.6472	0.6419	0.6373	0.6335	0.6305	0.6282	0.6267	0.6259	0.6259	0.6266	0.6281	0.6304	0.6334	0.6372	0.6417	0.6470	0.6531	0.6674	0.6848
0.7152	0.7084	0.7024	0.6971	0.6926	0.6889	0.6859	0.6837	0.6822	0.6815	0.6815	0.6823	0.6839	0.6862	0.6892	0.6931	0.6976	0.7030	0.7159	0.7319
0.7802	0.7727	0.7660	0.7600	0.7548	0.7503	0.7466	0.7437	0.7415	0.7401	0.7394	0.7395	0.7403	0.7419	0.7443	0.7474	0.7513	0.7559	0.7675	0.7820
0.8482	0.8400	0.8326	0.8259	0.8200	0.8148	0.8104	0.8068	0.8039	0.8017	0.8004	0.7997	0.7999	0.8008	0.8024	0.8048	0.8080	0.8119	0.8220	0.8352
0.9193	0.9103	0.9022	0.8948	0.8882	0.8823	0.8772	0.8728	0.8692	0.8664	0.8643	0.8630	0.8624	0.8626	0.8635	0.8652	0.8677	0.8709	0.8796	0.8913
0.9933	0.9837	0.9749	0.9668	0.9594	0.9529	0.9470	0.9420	0.9377	0.9341	0.9313	0.9293	0.9280	0.9275	0.9277	0.9287	0.9304	0.9329	0.9402	0.9505
1.0704	1.0601	1.0506	1.0417	1.0337	1.0264	1.0199	1.0141	1.0091	1.0048	1.0013	0.9986	0.9966	0.9954	0.9949	0.9952	0.9962	0.9980	1.0039	1.0128
1.1506	1.1395	1.1293	1.1198	1.1110	1.1030	1.0958	1.0893	1.0836	1.0786	1.0744	1.0709	1.0682	1.0663	1.0651	1.0647	1.0650	1.0661	1.0705	1.0780

PANEL 3 of 3

3.6	3.8	4.0	4.2	4.4	4.6	4.8	5.0	5.2	5.4	5.6	5.8	6.0	x_H / x_L
0.4906	0.5466	0.6057	0.6678	0.7329	0.8010	0.8722	0.9464	1.0236	1.1039	1.1871	1.2734	1.3628	0.0
0.4782	0.5335	0.5919	0.6533	0.7177	0.7851	0.8556	0.9290	1.0056	1.0851	1.1677	1.2533	1.3419	0.1
0.4666	0.5212	0.5789	0.6395	0.7032	0.7699	0.8397	0.9125	0.9883	1.0671	1.1490	1.2339	1.3218	0.2
0.4558	0.5097	0.5666	0.6266	0.6895	0.7556	0.8246	0.8967	0.9718	1.0499	1.1311	1.2152	1.3025	0.3
0.4457	0.4989	0.5551	0.6143	0.6766	0.7419	0.8102	0.8816	0.9560	1.0334	1.1139	1.1973	1.2839	0.4
0.4363	0.4888	0.5443	0.6029	0.6644	0.7290	0.7967	0.8673	0.9410	1.0177	1.0974	1.1802	1.2660	0.5
0.4277	0.4795	0.5343	0.5922	0.6530	0.7169	0.7838	0.8538	0.9267	1.0028	1.0818	1.1638	1.2489	0.6
0.4199	0.4710	0.5251	0.5822	0.6424	0.7055	0.7718	0.8410	0.9133	0.9886	1.0669	1.1482	1.2326	0.7
0.4128	0.4632	0.5166	0.5730	0.6325	0.6949	0.7604	0.8290	0.9005	0.9751	1.0527	1.1334	1.2170	0.8
0.4065	0.4562	0.5089	0.5646	0.6233	0.6851	0.7499	0.8177	0.8885	0.9624	1.0393	1.1193	1.2022	0.9
0.4010	0.4499	0.5019	0.5569	0.6149	0.6760	0.7401	0.8072	0.8773	0.9505	1.0267	1.1059	1.1882	1.0
0.3962	0.4444	0.4957	0.5500	0.6073	0.6676	0.7310	0.7974	0.8669	0.9393	1.0148	1.0933	1.1749	1.1
0.3921	0.4397	0.4902	0.5438	0.6004	0.6601	0.7227	0.7884	0.8572	0.9289	1.0037	1.0815	1.1623	1.2
0.3889	0.4357	0.4855	0.5384	0.5943	0.6532	0.7152	0.7802	0.8482	0.9193	0.9933	1.0704	1.1506	1.3
0.3863	0.4324	0.4816	0.5337	0.5889	0.6472	0.7084	0.7727	0.8400	0.9103	0.9837	1.0601	1.1395	1.4
0.3846	0.4300	0.4784	0.5299	0.5843	0.6419	0.7024	0.7660	0.8326	0.9022	0.9749	1.0506	1.1293	1.5
0.3835	0.4282	0.4760	0.5267	0.5805	0.6373	0.6971	0.7600	0.8259	0.8948	0.9668	1.0417	1.1198	1.6
0.3833	0.4273	0.4743	0.5243	0.5774	0.6335	0.6926	0.7548	0.8200	0.8882	0.9594	1.0337	1.1110	1.7
0.3838	0.4271	0.4734	0.5227	0.5751	0.6305	0.6889	0.7503	0.8148	0.8823	0.9529	1.0264	1.1030	1.8
0.3851	0.4276	0.4732	0.5218	0.5735	0.6282	0.6859	0.7466	0.8104	0.8772	0.9470	1.0199	1.0958	1.9
0.3871	0.4289	0.4738	0.5217	0.5727	0.6267	0.6837	0.7437	0.8068	0.8728	0.9420	1.0141	1.0893	2.0
0.3898	0.4310	0.4752	0.5224	0.5726	0.6259	0.6822	0.7415	0.8039	0.8692	0.9377	1.0091	1.0836	2.1
0.3934	0.4338	0.4773	0.5238	0.5733	0.6259	0.6815	0.7401	0.8017	0.8664	0.9341	1.0048	1.0786	2.2
0.3977	0.4374	0.4802	0.5260	0.5748	0.6266	0.6815	0.7394	0.8004	0.8643	0.9313	1.0013	1.0744	2.3
0.4027	0.4417	0.4838	0.5289	0.5770	0.6281	0.6823	0.7395	0.7997	0.8630	0.9293	0.9986	1.0709	2.4
0.4085	0.4468	0.4882	0.5326	0.5800	0.6304	0.6839	0.7403	0.7999	0.8624	0.9280	0.9966	1.0682	2.5
0.4151	0.4527	0.4933	0.5370	0.5837	0.6334	0.6862	0.7419	0.8008	0.8626	0.9275	0.9954	1.0663	2.6
0.4224	0.4593	0.4992	0.5422	0.5882	0.6372	0.6892	0.7443	0.8024	0.8635	0.9277	0.9949	1.0651	2.7
0.4305	0.4666	0.5059	0.5481	0.5934	0.6417	0.6931	0.7474	0.8048	0.8652	0.9287	0.9952	1.0647	2.8
0.4393	0.4748	0.5133	0.5548	0.5994	0.6470	0.6976	0.7513	0.8080	0.8677	0.9304	0.9962	1.0650	2.9
0.4489	0.4836	0.5215	0.5623	0.6062	0.6531	0.7030	0.7559	0.8119	0.8709	0.9329	0.9980	1.0661	3.0
0.4703	0.5037	0.5401	0.5795	0.6219	0.6674	0.7159	0.7675	0.8220	0.8796	0.9402	1.0039	1.0705	3.2
0.4948	0.5267	0.5617	0.5997	0.6407	0.6848	0.7319	0.7820	0.8352	0.8913	0.9505	1.0128	1.0780	3.4
0.5223	0.5528	0.5864	0.6230	0.6626	0.7052	0.7509	0.7996	0.8513	0.9061	0.9639	1.0247	1.0885	3.6
0.5528	0.5819	0.6141	0.6492	0.6874	0.7287	0.7729	0.8202	0.8705	0.9239	0.9802	1.0396	1.1021	3.8
0.5864	0.6141	0.6448	0.6786	0.7153	0.7552	0.7980	0.8439	0.8928	0.9447	0.9996	1.0576	1.1186	4.0
0.6230	0.6492	0.6786	0.7109	0.7463	0.7847	0.8261	0.8705	0.9180	0.9685	1.0221	1.0786	1.1382	4.2
0.6626	0.6874	0.7153	0.7463	0.7802	0.8172	0.8572	0.9002	0.9463	0.9954	1.0475	1.1027	[illegible]	4.4
0.7052	0.7287	0.7552	0.7847	0.8172	0.8528	0.8913	0.9330	0.9776	1.0253	1.0760	1.1297	1.1865	4.6
0.7509	0.7729	0.7980	0.8261	0.8572	0.8913	0.9285	0.9687	1.0119	1.0582	1.1075	1.1598	1.2152	4.8
0.7996	0.8202	0.8439	0.8705	0.9002	0.9330	0.9687	1.0075	1.0493	1.0942	1.1420	1.1929	1.2469	5.0
0.8513	0.8705	0.8928	0.9180	0.9463	0.9776	1.0119	1.0493	1.0897	1.1331	1.1796	1.2291	1.2816	5.2
0.9061	0.9239	0.9447	0.9685	0.9954	1.0253	1.0582	1.0942	1.1331	1.1752	1.2202	1.2683	1.3194	5.4
0.9639	0.9802	0.9996	1.0221	1.0475	1.0760	1.1075	1.1420	1.1796	1.2202	[illegible]	1.3105	[illegible]	5.6
1.0247	1.0396	1.0576	1.0786	1.1027	1.1297	1.1598	1.1929	1.2291	1.2683	1.3105	1.3557	1.4040	5.8
1.0885	1.1021	1.1186	1.1382	1.1608	1.1865	1.2152	1.2469	1.2816	1.3194	1.3601	1.4040	[illegible]	6.0

PANEL 1 of 3

x_L \ x_H	0.0	0.1	0.2	0.3	0.4	0.5	0.6	0.7	0.8	0.9	1.0	1.1	1.2
0.0	0.0000	0.0004	0.0015	0.0034	0.0061	0.0095	0.0136	0.0185	0.0242	0.0307	0.0379	0.0458	0.054
0.1	0.0004	0.0011	0.0026	0.0048	0.0079	0.0116	0.0161	0.0214	0.0274	0.0342	0.0418	0.0501	0.059
0.2	0.0015	0.0026	0.0044	0.0070	0.0104	0.0145	0.0194	0.0250	0.0314	0.0386	0.0465	0.0551	0.064
0.3	0.0034	0.0048	0.0070	0.0100	0.0137	0.0182	0.0234	0.0294	0.0361	0.0436	0.0519	0.0609	0.070
0.4	0.0061	0.0079	0.0104	0.0137	0.0178	0.0226	0.0282	0.0345	0.0416	0.0495	0.0581	0.0674	0.077
0.5	0.0095	0.0116	0.0145	0.0182	0.0226	0.0278	0.0337	0.0404	0.0479	0.0561	0.0650	0.0747	0.085
0.6	0.0136	0.0161	0.0194	0.0234	0.0282	0.0337	0.0400	0.0470	0.0549	0.0634	0.0727	0.0828	0.093
0.7	0.0185	0.0214	0.0250	0.0294	0.0345	0.0404	0.0470	0.0544	0.0626	0.0715	0.0812	0.0916	0.102
0.8	0.0242	0.0274	0.0314	0.0361	0.0416	0.0479	0.0549	0.0626	0.0711	0.0804	0.0904	0.1012	0.112
0.9	0.0307	0.0342	0.0386	0.0436	0.0495	0.0561	0.0634	0.0715	0.0804	0.0900	0.1004	0.1115	0.123
1.0	0.0379	0.0418	0.0465	0.0519	0.0581	0.0650	0.0727	0.0812	0.0904	0.1004	0.1111	0.1226	0.134
1.1	0.0458	0.0501	0.0551	0.0609	0.0674	0.0747	0.0828	0.0916	0.1012	0.1115	0.1226	0.1345	0.147
1.2	0.0545	0.0591	0.0645	0.0707	0.0776	0.0852	0.0936	0.1028	0.1127	0.1234	0.1349	0.1471	0.160
1.3	0.0640	0.0690	0.0747	0.0812	0.0884	0.0965	0.1052	0.1147	0.1250	0.1361	0.1479	0.1604	0.173
1.4	0.0742	0.0795	0.0856	0.0925	0.1001	0.1084	0.1176	0.1274	0.1381	0.1495	0.1616	0.1745	0.188
1.5	0.0852	0.0909	0.0973	0.1045	0.1125	0.1212	0.1307	0.1409	0.1519	0.1636	0.1761	0.1894	0.203
1.6	0.0969	0.1030	0.1098	0.1173	0.1256	0.1347	0.1445	0.1551	0.1665	0.1786	0.1914	0.2050	0.219
1.7	0.1094	0.1158	0.1230	0.1309	0.1395	0.1490	0.1591	0.1701	0.1818	0.1942	0.2075	0.2214	0.236
1.8	0.1227	0.1294	0.1369	0.1452	0.1542	0.1640	0.1745	0.1858	0.1979	0.2107	0.2242	0.2386	0.253
1.9	0.1367	0.1438	0.1516	0.1602	0.1696	0.1798	0.1907	0.2023	0.2147	0.2279	0.2418	0.2565	0.271
2.0	0.1514	0.1589	0.1671	0.1761	0.1858	0.1963	0.2075	0.2195	0.2323	0.2458	0.2601	0.2751	0.290
2.1	0.1669	0.1748	0.1833	0.1927	0.2027	0.2136	0.2252	0.2375	0.2507	0.2645	0.2792	0.2945	0.310
2.2	0.1832	0.1914	0.2003	0.2100	0.2204	0.2316	0.2436	0.2563	0.2698	0.2840	0.2990	0.3147	0.331
2.3	0.2003	0.2088	0.2181	0.2281	0.2389	0.2504	0.2627	0.2758	0.2896	0.3042	0.3196	0.3356	0.352
2.4	0.2180	0.2269	0.2366	0.2469	0.2581	0.2700	0.2827	0.2961	0.3103	0.3252	0.3409	0.3573	0.374
2.5	0.2366	0.2458	0.2558	0.2666	0.2781	0.2903	0.3033	0.3171	0.3316	0.3469	0.3630	0.3798	0.397
2.6	0.2559	0.2655	0.2758	0.2869	0.2988	0.3114	0.3248	0.3389	0.3538	0.3694	0.3858	0.4030	0.420
2.7	0.2760	0.2859	0.2966	0.3081	0.3203	0.3332	0.3470	0.3614	0.3767	0.3927	0.4094	0.4269	0.445
2.8	0.2968	0.3071	0.3181	0.3299	0.3425	0.3558	0.3699	0.3847	0.4003	0.4167	0.4338	0.4517	0.470
2.9	0.3184	0.3290	0.3404	0.3526	0.3655	0.3792	0.3936	0.4088	0.4247	0.4414	0.4589	0.4771	0.496
3.0	0.3407	0.3517	0.3635	0.3760	0.3892	0.4033	0.4181	0.4336	0.4499	0.4670	0.4848	0.5034	0.522
3.2	0.3876	0.3993	0.4118	0.4250	0.4390	0.4538	0.4693	0.4855	0.5025	0.5203	0.5388	0.5581	0.578
3.4	0.4376	0.4500	0.4632	0.4771	0.4918	0.5073	0.5235	0.5404	0.5581	0.5766	0.5959	0.6158	0.636
3.6	0.4906	0.5037	0.5176	0.5323	0.5476	0.5638	0.5807	0.5984	0.6168	0.6360	0.6559	0.6766	0.698
3.8	0.5466	0.5605	0.5751	0.5904	0.6065	0.6234	0.6410	0.6594	0.6785	0.6984	0.7190	0.7404	0.762
4.0	0.6057	0.6202	0.6355	0.6516	0.6684	0.6860	0.7043	0.7234	0.7432	0.7638	0.7852	0.8073	0.830
4.2	0.6678	0.6830	0.6990	0.7158	0.7333	0.7516	0.7706	0.7904	0.8110	0.8323	0.8543	0.8772	0.900
4.4	0.7329	0.7488	0.7655	0.7830	0.8013	0.8202	0.8400	0.8605	0.8817	0.9038	0.9265	0.9501	0.974
4.6	0.8010	0.8177	0.8351	0.8533	0.8722	0.8919	0.9124	0.9336	0.9555	0.9783	1.0018	1.0260	1.051
4.8	0.8722	0.8896	0.9077	0.9266	0.9462	0.9666	0.9878	1.0097	1.0324	1.0558	1.0800	1.1049	1.130
5.0	0.9464	0.9645	0.9833	1.0029	1.0233	1.0444	1.0662	1.0889	1.1122	1.1364	1.1613	1.1869	1.213
5.2	1.0236	1.0424	1.0619	1.0822	1.1033	1.1251	1.1477	1.1710	1.1951	1.2200	1.2456	1.2719	1.295
5.4	1.1039	1.1234	1.1436	1.1646	1.1864	1.2089	1.2322	1.2563	1.2811	1.3066	1.3329	1.3600	1.387
5.6	1.1871	1.2073	1.2283	1.2500	1.2725	1.2957	1.3197	1.3445	1.3700	1.3963	1.4233	1.4511	1.479
5.8	1.2734	1.2944	1.3160	1.3385	1.3617	1.3856	1.4103	1.4358	1.4620	1.4889	1.5167	1.5452	1.574
6.0	1.3628	1.3844	1.4068	1.4299	1.4538	1.4785	1.5039	1.5301	1.5570	1.5847	1.6131	1.6423	1.672

APPENDIX B

PAGE 36 - PANEL 2 of 3

TABLE B-6F. BEARING ERROR VARIANCE, S^2 - QUADRANTS II AND IV

1.3	1.4	1.5	1.6	1.7	1.8	1.9	2.0	2.1	2.2	2.3	2.4	2.5	2.6	2.7	2.8	2.9	3.0	3.2	3.4
0.0640	0.0742	0.0852	0.0969	0.1094	0.1227	0.1367	0.1514	0.1669	0.1832	0.2003	0.2180	0.2366	0.2559	0.2760	0.2968	0.3184	0.3407	0.876	0.4376
0.0690	0.0795	0.0909	0.1030	0.1158	0.1294	0.1438	0.1589	0.1748	0.1914	0.2088	0.2269	0.2458	0.2655	0.2859	0.3071	0.3290	0.3517	0.993	0.4500
0.0747	0.0856	0.0973	0.1098	0.1230	0.1369	0.1516	0.1671	0.1833	0.2003	0.2181	0.2366	0.2558	0.2758	0.2966	0.3181	0.3404	0.3635	0.4118	0.4632
0.0812	0.0925	0.1045	0.1173	0.1309	0.1452	0.1602	0.1761	0.1927	0.2100	0.2281	0.2469	0.2666	0.2869	0.3081	0.3299	0.3526	0.3760	0.4250	0.4771
0.0884	0.1001	0.1125	0.1256	0.1395	0.1542	0.1696	0.1858	0.2027	0.2204	0.2389	0.2581	0.2781	0.2988	0.3203	0.3425	0.3655	0.3892	0.4390	0.4918
0.0965	0.1084	0.1212	0.1347	0.1490	0.1640	0.1798	0.1963	0.2136	0.2316	0.2504	0.2700	0.2903	0.3114	0.3332	0.3558	0.3792	0.4033	0.4538	0.5073
0.1052	0.1176	0.1307	0.1445	0.1591	0.1745	0.1907	0.2075	0.2252	0.2436	0.2627	0.2827	0.3033	0.3248	0.3470	0.3699	0.3936	0.4181	0.4693	0.5235
0.1147	0.1274	0.1409	0.1551	0.1701	0.1858	0.2023	0.2195	0.2375	0.2563	0.2758	0.2961	0.3171	0.3389	0.3614	0.3847	0.4088	0.4336	0.4855	0.5404
0.1250	0.1381	0.1519	0.1665	0.1818	0.1979	0.2147	0.2323	0.2507	0.2698	0.2896	0.3103	0.3316	0.3538	0.3767	0.4003	0.4247	0.4499	0.5025	0.5581
0.1361	0.1495	0.1636	0.1786	0.1942	0.2107	0.2279	0.2458	0.2645	0.2840	0.3042	0.3252	0.3469	0.3694	0.3927	0.4167	0.4414	0.4670	0.5203	0.5766
0.1479	0.1616	0.1761	0.1914	0.2075	0.2242	0.2418	0.2601	0.2792	0.2990	0.3196	0.3409	0.3630	0.3858	0.4094	0.4338	0.4589	0.4848	0.5388	0.5959
0.1604	0.1745	0.1894	0.2050	0.2214	0.2386	0.2565	0.2751	0.2945	0.3147	0.3356	0.3573	0.3798	0.4030	0.4269	0.4517	0.4771	0.5034	0.5581	0.6158
0.1737	0.1882	0.2034	0.2194	0.2361	0.2536	0.2719	0.2909	0.3107	0.3312	0.3525	0.3745	0.3973	0.4209	0.4452	0.4703	0.4961	0.5227	0.5781	0.6366
0.1878	0.2026	0.2182	0.2345	0.2516	0.2695	0.2881	0.3075	0.3276	0.3485	0.3701	0.3925	0.4157	0.4396	0.4642	0.4897	0.5158	0.5428	0.5989	0.6583
0.2026	0.2178	0.2337	0.2504	0.2679	0.2861	0.3050	0.3248	0.3452	0.3665	0.3885	0.4112	0.4347	0.4590	0.4840	0.5098	0.5363	0.5636	0.6205	0.6804
0.2182	0.2337	0.2500	0.2671	0.2849	0.3034	0.3227	0.3428	0.3637	0.3852	0.4076	0.4307	0.4546	0.4792	0.5045	0.5307	0.5576	0.5852	0.6428	0.7034
0.2345	0.2504	0.2671	0.2845	0.3026	0.3215	0.3412	0.3616	0.3828	0.4048	0.4275	0.4509	0.4751	0.5001	0.5258	0.5523	0.5796	0.6076	0.6658	0.727
0.2516	0.2679	0.2849	0.3026	0.3211	0.3404	0.3604	0.3812	0.4028	0.4251	0.4481	0.4719	0.4965	0.5218	0.5479	0.5747	0.6023	0.6307	0.6897	0.751
0.2695	0.2861	0.3034	0.3215	0.3404	0.3600	0.3804	0.4015	0.4234	0.4461	0.4695	0.4937	0.5186	0.5443	0.5707	0.5979	0.6259	0.6546	0.7142	0.777
0.2881	0.3050	0.3227	0.3412	0.3604	0.3804	0.4011	0.4226	0.4449	0.4679	0.4917	0.5162	0.5414	0.5675	0.5943	0.6218	0.6501	0.6792	0.7396	0.803
0.3075	0.3248	0.3428	0.3616	0.3812	0.4015	0.4226	0.4445	0.4671	0.4904	0.5146	0.5394	0.5651	0.5915	0.6186	0.6465	0.6752	0.7046	0.7657	0.8298
0.3276	0.3452	0.3637	0.3828	0.4028	0.4234	0.4449	0.4671	0.4900	0.5138	0.5382	0.5635	0.5894	0.6162	0.6437	0.6719	0.7009	0.7307	0.7925	0.857
0.3485	0.3665	0.3852	0.4048	0.4251	0.4461	0.4679	0.4904	0.5138	0.5378	0.5626	0.5882	0.6146	0.6417	0.6695	0.6981	0.7275	0.7576	0.8201	0.885
0.3701	0.3885	0.4076	0.4275	0.4481	0.4695	0.4917	0.5146	0.5382	0.5626	0.5878	0.6138	0.6405	0.6679	0.6961	0.7251	0.7548	0.7853	0.8485	0.914
0.3925	0.4112	0.4307	0.4509	0.4719	0.4937	0.5162	0.5394	0.5635	0.5882	0.6138	0.6401	0.6671	0.6949	0.7235	0.7528	0.7829	0.8137	0.8776	0.944
0.4157	0.4347	0.4546	0.4751	0.4965	0.5186	0.5414	0.5651	0.5894	0.6146	0.6405	0.6671	0.6945	0.7227	0.7516	0.7812	0.8117	0.8429	0.9075	0.975
0.4396	0.4590	0.4792	0.5001	0.5218	0.5443	0.5675	0.5915	0.6162	0.6417	0.6679	0.6949	0.7227	0.7512	0.7804	0.8105	0.8413	0.8728	0.9381	1.006
0.4642	0.4840	0.5045	0.5258	0.5479	0.5707	0.5943	0.6186	0.6437	0.6695	0.6961	0.7235	0.7516	0.7804	0.8101	0.8404	0.8716	0.9035	0.9695	1.038
0.4897	0.5098	0.5307	0.5523	0.5747	0.5979	0.6219	0.6465	0.6719	0.6981	0.7251	0.7528	0.7812	0.8105	0.8404	0.8712	0.9027	0.9349	1.0017	1.071
0.5158	0.5363	0.5576	0.5796	0.6023	0.6259	0.6501	0.6752	0.7009	0.7275	0.7548	0.7829	0.8117	0.8413	0.8716	0.9027	0.9345	0.9671	1.0346	1.105
0.5428	0.5636	0.5852	0.6076	0.6307	0.6546	0.6792	0.7046	0.7307	0.7576	0.7853	0.8137	0.8429	0.8728	0.9035	0.9349	0.9671	1.0001	1.0683	1.139
0.5989	0.6205	0.6428	0.6658	0.6897	0.7142	0.7396	0.7657	0.7925	0.8201	0.8485	0.8776	0.9075	0.9381	0.9695	1.0017	1.0346	1.0683	1.1379	1.210
0.6581	0.6804	0.7034	0.7271	0.7517	0.7770	0.8030	0.8298	0.8574	0.8857	0.9148	0.9446	0.9752	1.0065	1.0386	1.0715	1.1051	1.1395	1.2105	1.284
0.7203	0.7433	0.7670	0.7915	0.8167	0.8427	0.8695	0.8970	0.9252	0.9543	0.9840	1.0146	1.0459	1.0779	1.1107	1.1443	1.1786	1.2137	1.2862	1.361
0.7855	0.8092	0.8336	0.8588	0.8848	0.9115	0.9389	0.9672	0.9961	1.0259	1.0564	1.0876	1.1196	1.1524	1.1859	1.2202	1.2552	1.2910	1.3648	1.441
0.8538	0.8782	0.9033	0.9292	0.9559	0.9833	1.0115	1.0404	1.0701	1.1005	1.1317	1.1637	1.1964	1.2298	1.2641	1.2991	1.3348	1.3713	1.4466	1.524
0.9251	0.9502	0.9760	1.0026	1.0300	1.0581	1.0870	1.1166	1.1470	1.1782	1.2101	1.2427	1.2762	1.3103	1.3453	1.3810	1.4174	1.4546	1.5313	1.611
0.9994	1.0252	1.0518	1.0791	1.1071	1.1360	1.1656	1.1959	1.2270	1.2589	1.2915	1.3248	1.3590	1.3939	1.4295	1.4659	1.5031	1.5410	1.6191	1.700
1.0767	1.1032	1.1305	1.1585	1.1873	1.2169	1.2472	1.2782	1.3100	1.3426	1.3759	1.4100	1.4448	1.4804	1.5168	1.5539	1.5917	1.6304	1.7099	1.792
1.1571	1.1843	1.2123	1.2410	1.2705	1.3008	1.3318	1.3635	1.3961	1.4293	1.4634	1.4981	1.5337	1.5700	1.6071	1.6449	1.6834	1.7228	1.8037	1.887
1.2405	1.2684	1.2971	1.3266	1.3568	1.3877	1.4194	1.4519	1.4851	1.5191	1.5538	1.5893	1.6256	1.6626	1.7004	1.7389	1.7782	1.8182	1.9006	1.985
1.3269	1.3556	1.3850	1.4151	1.4460	1.4777	1.5101	1.5433	1.5772	1.6119	1.6474	1.6836	1.7205	1.7582	1.7967	1.8360	1.8759	1.9167	2.0005	2.087
1.4164	1.4457	1.4758	1.5067	1.5383	1.5707	1.6038	1.6377	1.6723	1.7077	1.7437	1.7808	1.8185	1.8569	1.8961	1.9360	1.9767	2.0182	2.1034	2.191
1.5089	1.5389	1.5698	1.6013	1.6336	1.6667	1.7006	1.7351	1.7705	1.8066	1.8435	1.8811	1.9195	1.9586	1.9985	2.0391	2.0806	2.1227	2.2093	2.298
1.6044	1.6352	1.6667	1.6990	1.7320	1.7658	1.8003	1.8356	1.8717	1.9085	1.9461	1.9844	2.0235	2.0633	2.1039	2.1453	2.1874	2.2303	2.3183	2.409
1.7030	1.7344	1.7666	1.7996	1.8334	1.8679	1.9031	1.9391	1.9759	2.0134	2.0517	2.0907	2.1305	2.1711	2.2124	2.2545	2.2973	2.3409	2.4303	2.522

APPENDIX B
PAGE 36-PANEL 3 of 3

3.6	3.8	4.0	4.2	4.4	4.6	4.8	5.0	5.2	5.4	5.6	5.8	6.0	X_H / X_L
0.4906	0.5466	0.6057	0.6678	0.7329	0.8010	0.8722	0.9464	1.0236	1.1039	1.1871	1.2734	1.3628	0.0
0.5037	0.5605	0.6202	0.6830	0.7488	0.8177	0.8896	0.9645	1.0424	1.1234	1.2073	1.2944	1.3844	0.1
0.5176	0.5751	0.6355	0.6990	0.7655	0.8351	0.9077	0.9833	1.0619	1.1436	1.2283	1.3160	1.4068	0.2
0.5323	0.5904	0.6516	0.7158	0.7830	0.8533	0.9266	1.0029	1.0822	1.1646	1.2500	1.3385	1.4299	0.3
0.5476	0.6065	0.6684	0.7333	0.8013	0.8722	0.9462	1.0233	1.1033	1.1864	1.2725	1.3617	1.4538	0.4
0.5638	0.6234	0.6860	0.7516	0.8202	0.8919	0.9666	1.0444	1.1251	1.2089	1.2957	1.3856	1.4785	0.5
0.5807	0.6410	0.7043	0.7706	0.8400	0.9124	0.9878	1.0662	1.1477	1.2322	1.3197	1.4103	1.5039	0.6
0.5984	0.6594	0.7234	0.7904	0.8605	0.9336	1.0097	1.0889	1.1710	1.2563	1.3445	1.4358	1.5301	0.7
0.6168	0.6785	0.7432	0.8110	0.8817	0.9555	1.0324	1.1122	1.1951	1.2811	1.3700	1.4620	1.5570	0.8
0.6360	0.6984	0.7638	0.8323	0.9038	0.9783	1.0558	1.1364	1.2200	1.3066	1.3963	1.4889	1.5847	0.9
0.6559	0.7190	0.7852	0.8543	0.9265	1.0018	1.0800	1.1613	1.2456	1.3329	1.4233	1.5167	1.6131	1.0
0.6766	0.7404	0.8073	0.8772	0.9501	1.0260	1.1049	1.1869	1.2719	1.3600	1.4511	1.5452	1.6423	1.1
0.6981	0.7626	0.8302	0.9007	0.9743	1.0510	1.1307	1.2133	1.2991	1.3878	1.4796	1.5744	1.6722	1.2
0.7203	0.7855	0.8538	0.9251	0.9994	1.0767	1.1571	1.2405	1.3269	1.4164	1.5089	1.6044	1.7030	1.3
0.7433	0.8092	0.8782	0.9502	1.0252	1.1032	1.1843	1.2684	1.3556	1.4457	1.5389	1.6352	1.7344	1.4
0.7670	0.8336	0.9033	0.9760	1.0518	1.1305	1.2123	1.2971	1.3850	1.4758	1.5698	1.6667	1.7666	1.5
0.7915	0.8588	0.9292	1.0026	1.0791	1.1585	1.2410	1.3266	1.4151	1.5067	1.6013	1.6990	1.7996	1.6
0.8167	0.8848	0.9559	1.0300	1.1071	1.1873	1.2705	1.3568	1.4460	1.5383	1.6336	1.7320	1.8334	1.7
0.8427	0.9115	0.9833	1.0581	1.1360	1.2169	1.3008	1.3877	1.4777	1.5707	1.6667	1.7658	1.8679	1.8
0.8695	0.9389	1.0115	1.0870	1.1656	1.2472	1.3318	1.4194	1.5101	1.6038	1.7006	1.8003	1.9031	1.9
0.8970	0.9672	1.0404	1.1166	1.1959	1.2782	1.3635	1.4519	1.5433	1.6377	1.7351	1.8356	1.9391	2.0
0.9252	0.9961	1.0701	1.1470	1.2270	1.3100	1.3961	1.4851	1.5772	1.6723	1.7705	1.8717	1.9759	2.1
0.9543	1.0259	1.1005	1.1782	1.2589	1.3426	1.4293	1.5191	1.6119	1.7077	1.8066	1.9085	2.0134	2.2
0.9840	1.0564	1.1317	1.2101	1.2915	1.3759	1.4634	1.5538	1.6474	1.7439	1.8435	1.9461	2.0517	2.3
1.0146	1.0876	1.1637	1.2427	1.3248	1.4100	1.4981	1.5893	1.6836	1.7808	1.8811	1.9844	2.0907	2.4
1.0459	1.1196	1.1964	1.2762	1.3590	1.4448	1.5337	1.6256	1.7205	1.8185	1.9195	2.0235	2.1305	2.5
1.0779	1.1524	1.2298	1.3103	1.3939	1.4804	1.5700	1.6626	1.7582	1.8569	1.9586	2.0633	2.1711	2.6
1.1107	1.1859	1.2641	1.3453	1.4295	1.5168	1.6071	1.7004	1.7967	1.8961	1.9985	2.1039	2.2124	2.7
1.1443	1.2202	1.2991	1.3810	1.4659	1.5539	1.6449	1.7389	1.8360	1.9360	2.0391	2.1453	2.2545	2.8
1.1786	1.2552	1.3348	1.4174	1.5031	1.5917	1.6834	1.7782	1.8759	1.9767	2.0806	2.1874	2.2973	2.9
1.2137	1.2910	1.3713	1.4546	1.5410	1.6304	1.7228	1.8182	1.9167	2.0182	2.1227	2.2303	2.3409	3.0
1.2662	1.3648	1.4466	1.5313	1.6191	1.7099	1.8037	1.9006	2.0005	2.1034	2.2093	2.3183	2.4303	3.2
1.3616	1.4417	1.5249	1.6110	1.7002	1.7924	1.8877	1.9859	2.0873	2.1916	2.2989	2.4093	2.5227	3.4
1.4401	1.5216	1.6062	1.6938	1.7844	1.8780	1.9747	2.0744	2.1771	2.2828	2.3916	2.5034	2.6182	3.6
1.5216	1.6046	1.6905	1.7795	1.8716	1.9666	2.0647	2.1658	2.2699	2.3771	2.4873	2.6005	2.7168	3.8
1.6062	1.6905	1.7779	1.8683	1.9618	2.0582	2.1577	2.2603	2.3658	2.4744	2.5860	2.7006	2.8183	4.0
1.6938	1.7795	1.8683	1.9602	2.0550	2.1529	2.2538	2.3577	2.4647	2.5747	2.6877	2.8038	2.9229	4.2
1.7844	1.8716	1.9618	2.0550	2.1513	2.2506	2.3529	2.4583	2.5667	2.6781	2.7925	2.9100	3.0305	4.4
1.8780	1.9666	2.0582	2.1529	2.2506	2.3513	2.4550	2.5618	2.6716	2.7844	2.9003	3.0192	3.1411	4.6
1.9747	2.0647	2.1577	2.2538	2.3529	2.4550	2.5602	2.6684	2.7796	2.8939	3.0111	3.1314	3.2548	4.8
2.0744	2.1658	2.2603	2.3577	2.4583	2.5618	2.6684	2.7780	2.8906	3.0063	3.1250	3.2467	3.3715	5.0
2.1771	2.2699	2.3658	2.4647	2.5667	2.6716	2.7796	2.8906	3.0047	3.1218	3.2419	3.3650	3.4912	5.2
2.2828	2.3771	2.4744	2.5747	2.6781	2.7844	2.8939	3.0063	3.1218	3.2403	3.3618	3.4863	3.6139	5.4
2.3916	2.4873	2.5860	2.6877	2.7925	2.9003	3.0111	3.1250	3.2419	3.3618	3.4847	3.6107	3.7397	5.6
2.5034	2.6005	2.7006	2.8038	2.9100	3.0192	3.1314	3.2467	3.3650	3.4863	3.6107	3.7381	3.8685	5.8
2.6182	2.7168	2.8183	2.9229	3.0305	3.1411	3.2548	3.3715	3.4912	3.6139	3.7397	3.8685	4.0003	6.0

A P P E N D I X C

RECEIVER RF INPUT VOLTAGE

(HARD AND EASY MICROVOLTS)

THIS PAGE INTENTIONALLY LEFT BLANK

RECEIVER RF SIGNAL LEVELS

Modern RF signal generators are usually calibrated in dBm (decibels with respect to 1 milliwatt into 50 ohms), and in volts, millivolts, or microvolts into a 50 ohm termination. (Note that 0 dBm = .224 volts.)

Therefore, this unit of measurement will be used throughout this document.

Older RF signal generators were calibrated in open circuit voltage, or emf, and would deliver one-half of the open-circuit voltage into a terminating impedance equal to the generator source impedance.

Historically, sensitivity standards for VOR, localizer and glide slope receivers were originally set up using emf-calibrated generators. When the termination-related signal generators came into use, it was not considered desirable to change the sensitivity values. Since the termination-related generator delivered twice as much voltage into the receiver as an emf-rated generator, it was easier to meet sensitivity standards, and the termination-rated voltages were known as "easy" microvolts. In order to get back to the harder-to-meet levels ("hard" microvolts), a 6 dB pad was connected between the termination-rated generator and the receiver.

As a result of the almost universal availability of 50 ohm measurement use and synthesis equipment, the dBm as a unit of measurement has been adopted in this document.

Therefore, when using this document with a 50 ohm generator, a 6 dB attenuator is not necessary and the generator may be read directly.

THIS PAGE INTENTIONALLY LEFT BLANK