AERIAL REPORTS
ACCURATE AERIAL MEASUREMENT SERVICES

WALL & SIDING STANDARD

Prepared For:

Ordered By : Your Insurance Claims Network, LLC
Phone: 216-331-8323
E-mail: yourinsuranceclaimsnetwork@gmail.com
Site Address: 11318 MT OVERLOOK CLEVELAND OH 44104
GPS Coordinates: 41.4899,-81.604962

Property Image

Table of Contents

Description	Page
Property Image	1
3D Wall Sketch & Summary	2
Waste Factor	2
Oblique Views	3
Wall Length	4
Wall Facets Labels	5
Wall Table Area	5

Powered by: **AERIAL REPORTS** | Copyright© 2012 -2025 All Rights Reserved. Use of this document is governed by AerialReports' Terms of Use and is provided "as is." AerialReports offers no guarantees, representations, or warranties, whether express or implied, by law or otherwise, regarding this document or its contents or use, including but not limited to, quality, accuracy, completeness, reliability, or suitability for a specific purpose.

3D Wall Sketch

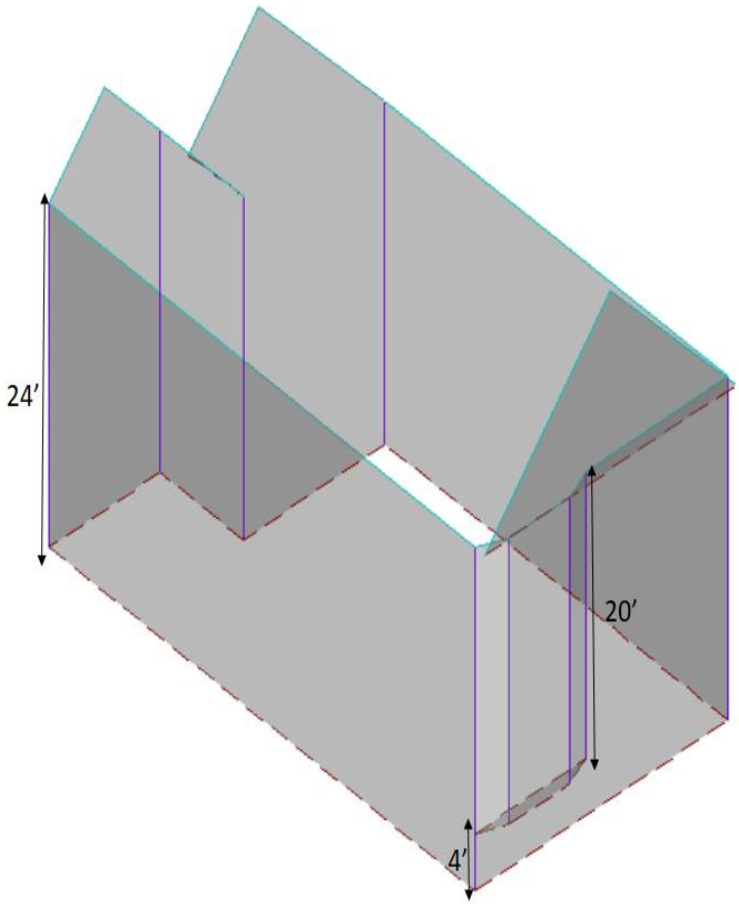

Wall Summary

TOTAL WALL AREA (FT²)	3728.20
NO OF WALL FACADES	10
WALL TOP (FT)	195.87
WALL BOTTOM (FT)	197.16
TOTAL WALL CORNERS (FT)	204.00
INSIDE CORNERS	1
LENGTH OF INSIDE CORNERS	20.00
OUTSIDE CORNERS	9
LENGTH OF OUTSIDE CORNERS	184.00
TOTAL WALL LENGTH	183.89
NO OF WALL BASES	12
NO OF WALL TOPS	13

NOTES: NONE

WASTE CHART - (3728.20 ft²)

Waste %	5 %	10 %	12 %	15 %	17%	20%
Wall Area Ft²	3914.61	4101.02	4175.58	4287.43	4361.99	4473.84
Wall Squares	39.15	41.01	41.76	42.87	43.62	44.74

Powered by: AERIAL REPORTS | Copyright© 2012 -2025 All Rights Reserved. Use of this document is governed by AerialReports' Terms of Use and is provided "as is." AerialReports offers no guarantees, representations, or warranties, whether express or implied, by law or otherwise, regarding this document or its contents or use, including but not limited to, quality, accuracy, completeness, reliability, or suitability for a specific purpose.

Site Address: 11318 MT OVERLOOK CLEVELAND OH 44104, Coordinates: 41.4899,-81.604962
Order No: AR260205390047

Oblique Property

North

East

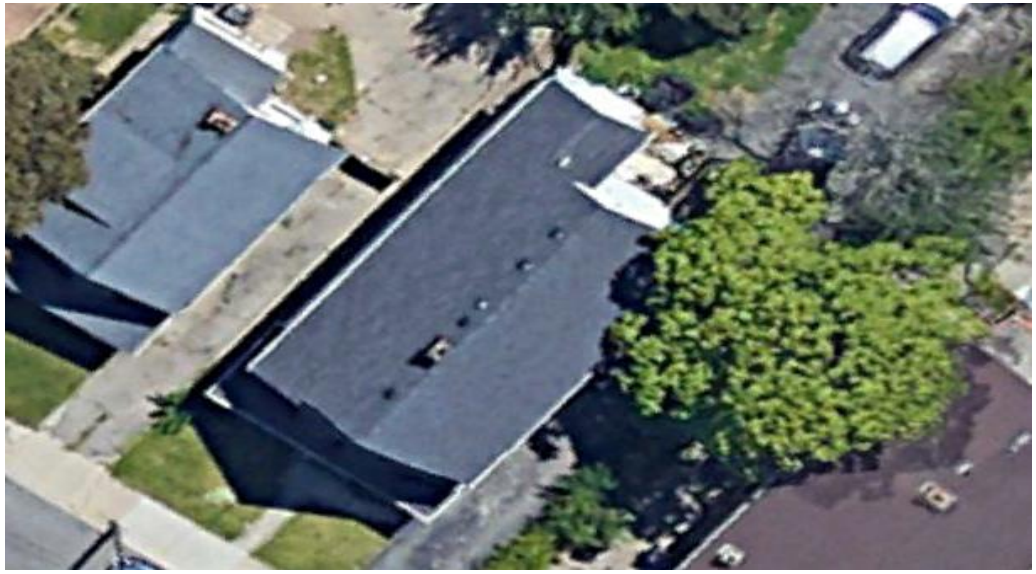

South

West

Powered by: **AERIAL REPORTS** | Copyright© 2012 -2025 All Rights Reserved. Use of this document is governed by AerialReports' Terms of Use and is provided "as is." AerialReports offers no guarantees, representations, or warranties, whether express or implied, by law or otherwise, regarding this document or its contents or use, including but not limited to, quality, accuracy, completeness, reliability, or suitability for a specific purpose.

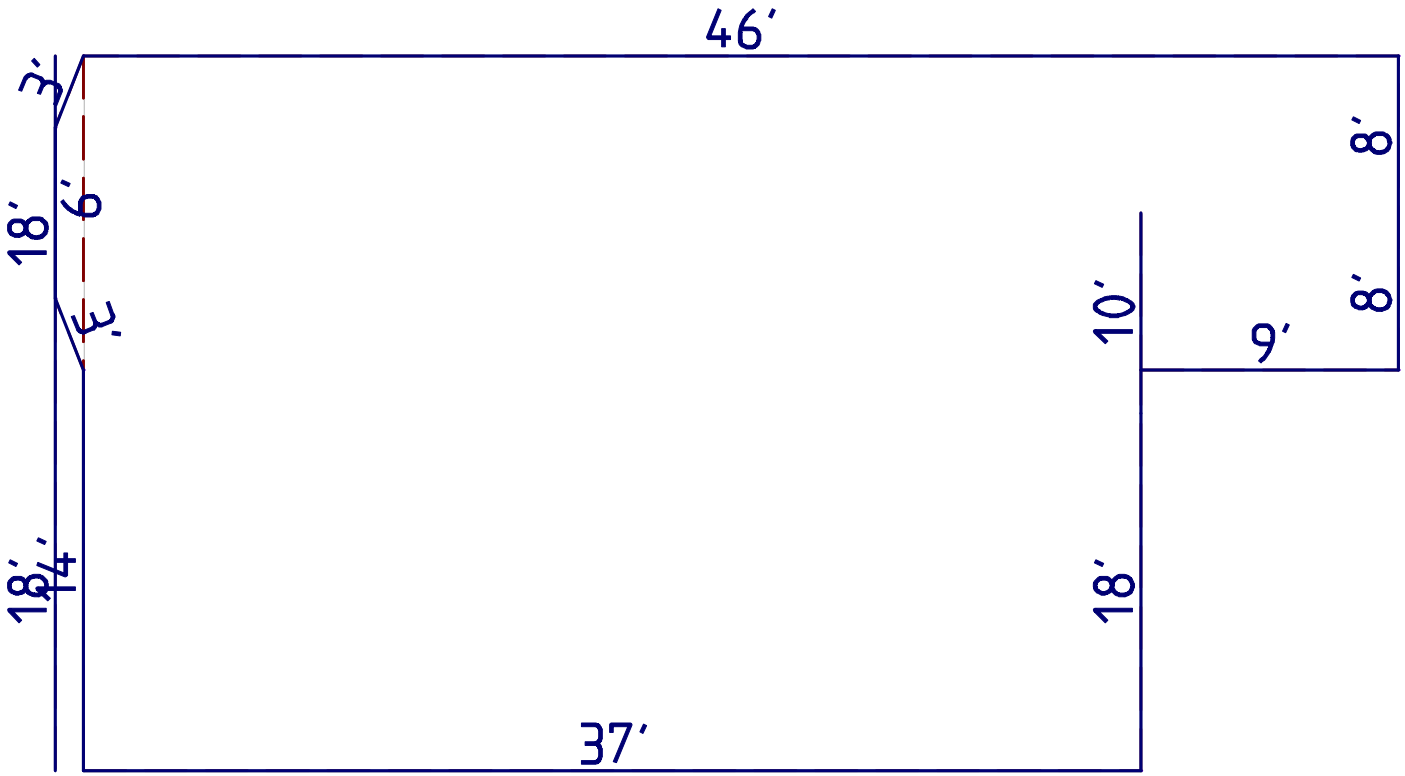

Length segments are rounded to the nearest whole number for readability.

Powered by: **AERIAL REPORTS** | Copyright© 2012 -2025 All Rights Reserved. Use of this document is governed by AerialReports' Terms of Use and is provided "as is." AerialReports offers no guarantees, representations, or warranties, whether express or implied, by law or otherwise, regarding this document or its contents or use, including but not limited to, quality, accuracy, completeness, reliability, or suitability for a specific purpose.

 Site Address: 11318 MT OVERLOOK CLEVELAND OH 44104, Coordinates: 41.4899,-81.604962 Order No: AR260205390047

Wall Facet Labels

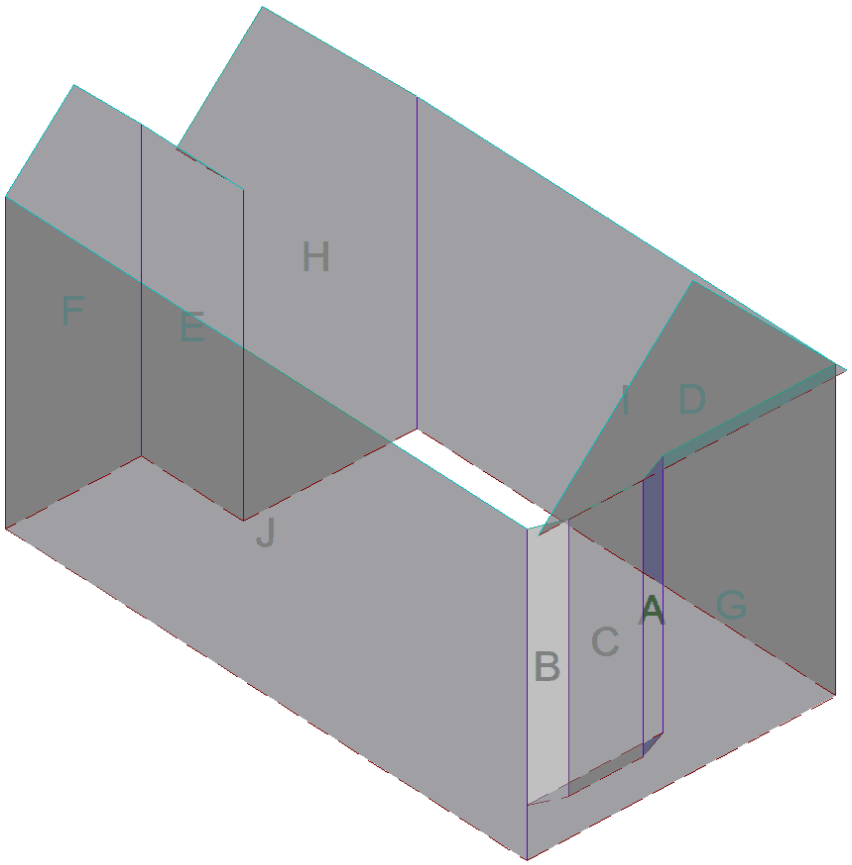

Wall Facet Table

Facet	Area	Plane Type
A	54ft²	Wall
B	54ft²	Wall
C	120ft²	Wall
D	157ft²	Wall
E	216ft²	Wall
F	295ft²	Wall
G	380ft²	Wall
H	462ft²	Wall
I	888ft²	Wall
J	1104ft²	Wall

Powered by: **AERIAL REPORTS** | Copyright© 2012 -2025 All Rights Reserved. Use of this document is governed by AerialReports' Terms of Use and is provided "as is." AerialReports offers no guarantees, representations, or warranties, whether express or implied, by law or otherwise, regarding this document or its contents or use, including but not limited to, quality, accuracy, completeness, reliability, or suitability for a specific purpose.

Site Address: 11318 MT OVERLOOK CLEVELAND OH 44104, Coordinates: 41.4899,-81.604962
Order No: AR260205390047