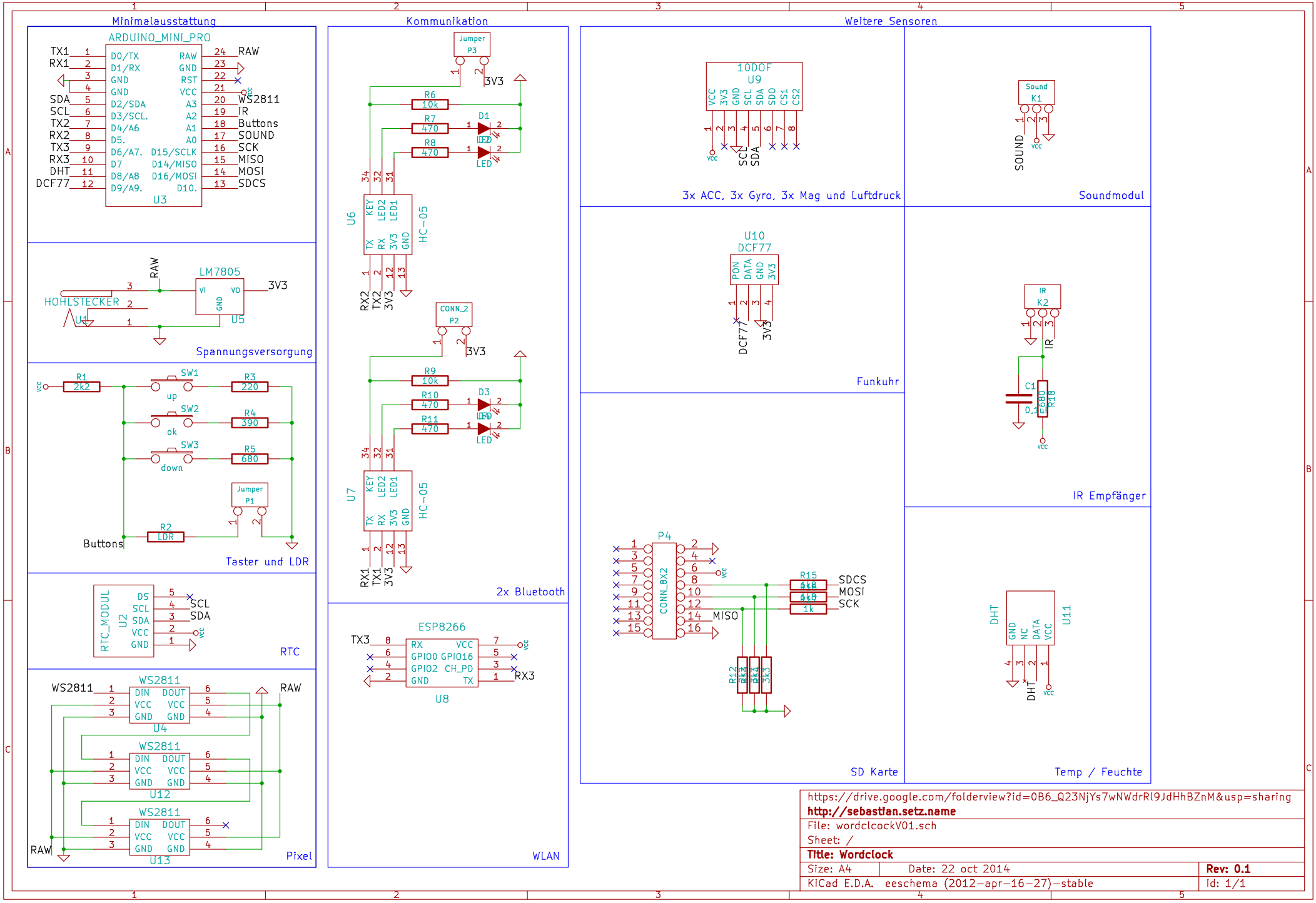
Minimalausstattung
ARDUINO_MINI_PRO
U3
Spannungsversorgung
HOHLSTECKER
LM7805
U5
Taster und LDR
Buttons
RTC
RTC_MODUL
U2
Pixel
WS2811
U4
U12
U13
Kommunikation
U6
U7
HC-05
2x Bluetooth
ESP8266
U8
WLAN
Weitere Sensoren
10DOF
U9
3x ACC, 3x Gyro, 3x Mag und Luftdruck
Soundmodul
U10
DCF77
Funkuhr
IR Empfänger
P4
CONN_8X2
SD Karte
DHT
U11
Temp / Feuchte
https://drive.google.com/folderview?id=0B6_Q23NjYs7wNWdrRl9JdHhBZnM&usp=sharing
http://sebastian.setz.name
File: wordclockV01.sch
Sheet: /
Title: Wordclock
Size: A4
Date: 22 oct 2014
Rev: 0.1
KiCad E.D.A. eeschema (2012-apr-16-27)-stable
Id: 1/1

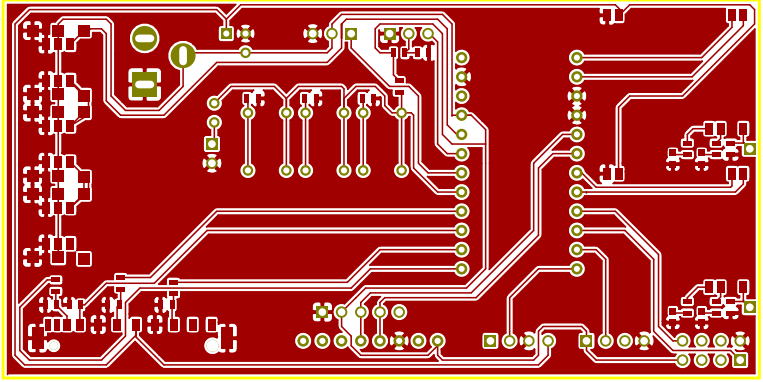

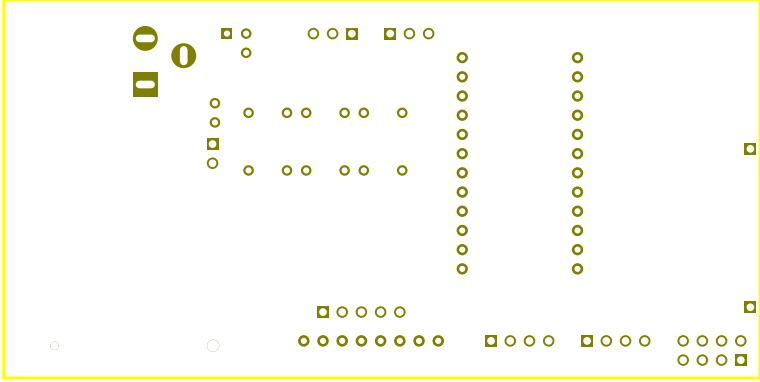

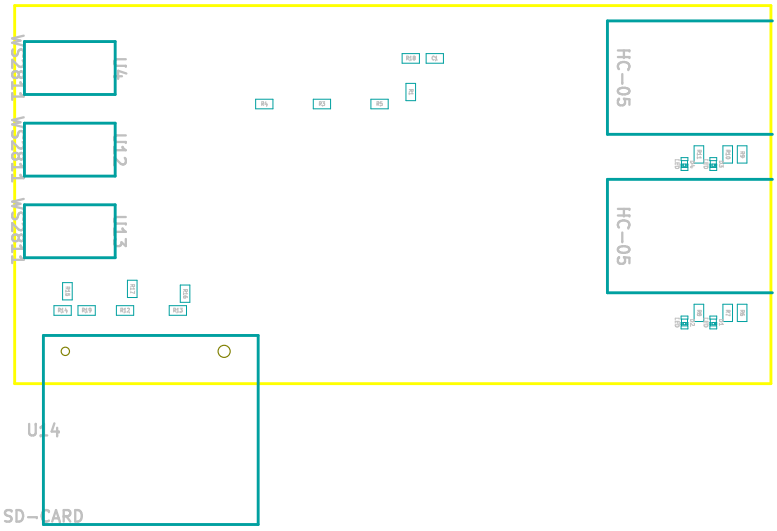
U14
SD-CARD
HC-05
HC-05

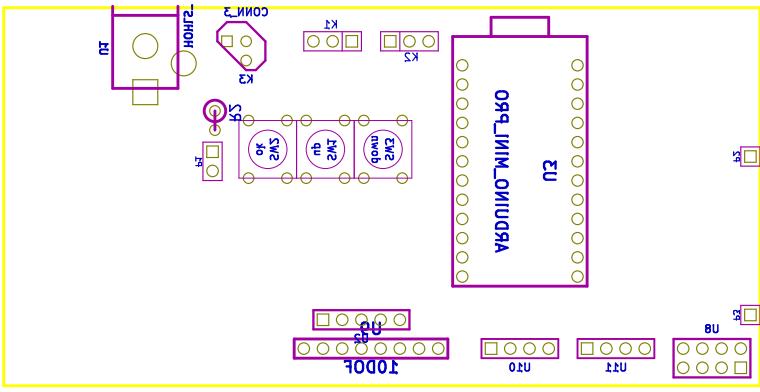
ARDUINO_PRO_MINI
U3
J3
U8
U11
U10
U9
J2
J4
K1
K2
K3
K4
K5
K6
K7
K8
K9
K10
K11
K12
K13
K14
K15
K16
K17
K18
K19
K20
K21
K22
K23
K24
K25
K26
K27
K28
K29
K30
K31
K32
K33
K34
K35
K36
K37
K38
K39
K40