Technische Universität Braunschweig

Chair for Chip Design for Embedded Computing

HWSW-Systeme

Übung 12: FPGA Elemente: DSP

M.Sc. Eike Trumann, M.Sc. Jasper Homann

Prof. Dr.-Ing. Guillermo Payá Vayá

23. Januar 2026

1 FIR

Finite-Impulse-Response Filter (FIR)

Das folgende Datenflussdiagramm eines 4-tap FIR Filters soll in Hardware realisiert werden. Alle Eingangs-Datensignale haben ein signed 16-bit Format. Die Koeffizienten haben ebenfalls signed 16-bit und liegen in einem (externen) Register.

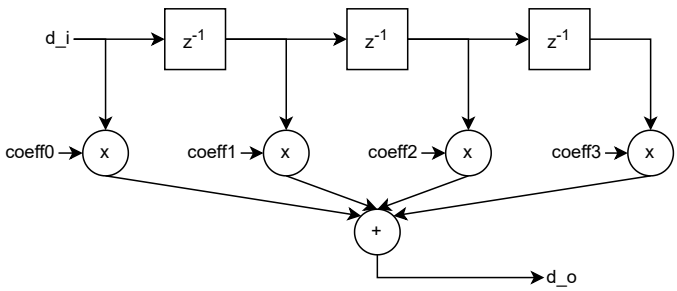

Die Elemente (des FIR) sind:

z^{-1}	Register
$\times$	Multiplikationen
$+$	Additionen
$coeff_x$	Koeffizienten
d_{in}, d_x, d_{out}	Eingangs-/Zwischen- und Ausgangsdaten

Bennenen Sie in der Abbildung oben alle noch unbenannten Signale.
Beschreiben Sie das FIR-Modul in VHDL

```
library IEEE;
use IEEE.std_logic_1164.all;
use ieee.numeric_std.all;

entity FIR is
        port(
                clk, rst_n                      : in  std_ulogic;
                coeff0, coeff1, coeff2, coeff3 : in  signed(15 downto 0);
                d_i                             : in  signed(15 downto 0);
                d_o                             : out signed(31 downto 0)
        );
end entity;

architecture RTL of FIR is
        -- temporary signals




        -- registers (process template below)




begin
```

```
        seq_register: process(clk)
        begin
          if rising_edge(clk) then
            if rst_n = '0' then



            else



            end if;        -- reset
          end if; -- clk
        end process;
end architecture RTL;
```

2 DSP

Welche Operationen können durch eine DSP Slice berechnet werden?

DSP Instanziierung: DSP48E1

Instanziieren und Konfigurieren Sie eine DSP48E1 Slice Instanz, sodass die folgende Schaltung durch die DSP Slice berechnet wird: Tragen Sie dazu zunächst in der Abbildung ein, welche (internen) Signale und Register des DSP auf die Elemente der Schaltung abgebildet werden.

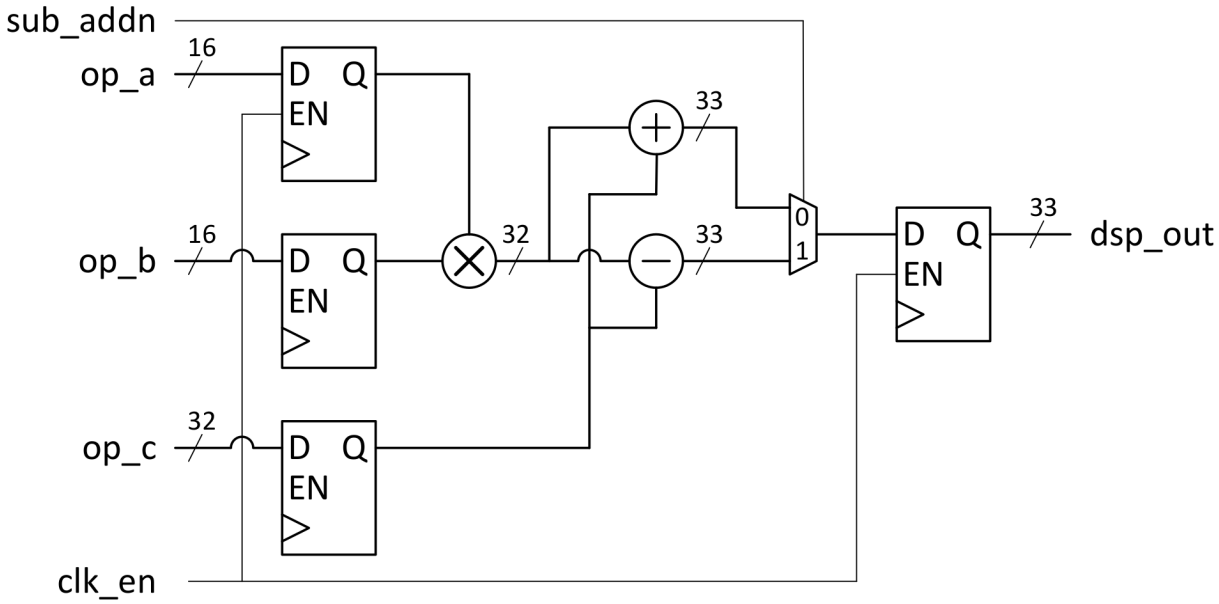

```
begin
...
DSP48E1_inst1 : DSP48E1
generic map(
        -- Feature Control Attributes: Data Path Selection
        A_INPUT            => "                 ", -- Selects A input source, "DIRECT" (A port) or "CASCADE" (ACIN port)
        B_INPUT            => "                 ", -- Selects B input source, "DIRECT" (B port) or "CASCADE" (BCIN port)
        USE_DPORT          =>                   , -- Select D port usage (TRUE or FALSE)
        USE_MULT           => "                 ", -- Select multiplier usage ("MULTIPLY", "DYNAMIC", or "NONE")
        -- Pattern Detector Attributes: Pattern Detection Configuration
        AUTORESET_PATDET   => "                 ", -- "NO_RESET", "RESET_MATCH", "RESET_NOT_MATCH"
        MASK               =>                   , -- 48-bit mask value for pattern detect (1=ignore)
        PATTERN            =>                   , -- 48-bit pattern match for pattern detect
        SEL_MASK           => "                 ", -- "C", "MASK", "ROUNDING_MODE1", "ROUNDING_MODE2"
        SEL_PATTERN        => "                 ", -- Select pattern value ("PATTERN" or "C")
        USE_PATTERN_DETECT => "                 ", -- Enable pattern detect ("PATDET" or "NO_PATDET")
        -- Register Control Attributes: Pipeline Register Configuration
        ACASCREG           =>                   , -- Number of pipeline stages between A/ACIN and ACOUT (0, 1 or 2)
        ADREG              =>                   , -- Number of pipeline stages for pre-adder (0 or 1)
        ALUMODEREG         =>                   , -- Number of pipeline stages for ALUMODE (0 or 1)
        AREG               =>                   , -- Number of pipeline stages for A (0, 1 or 2)
        BCASCREG           =>                   , -- Number of pipeline stages between B/BCIN and BCOUT (0, 1 or 2)
        BREG               =>                   , -- Number of pipeline stages for B (0, 1 or 2)
        CARRYINREG         =>                   , -- Number of pipeline stages for CARRYIN (0 or 1)
        CARRYINSELREG      =>                   , -- Number of pipeline stages for CARRYINSEL (0 or 1)
        CREG               =>                   , -- Number of pipeline stages for C (0 or 1)
        DREG               =>                   , -- Number of pipeline stages for D (0 or 1)
        INMODEREG          =>                   , -- Number of pipeline stages for INMODE (0 or 1)
        MREG               =>                   , -- Number of multiplier pipeline stages (0 or 1)
        OPMODEREG          =>                   , -- Number of pipeline stages for OPMODE (0 or 1)
        PREG               =>                   , -- Number of pipeline stages for P (0 or 1)
        USE_SIMD           => "                 "  -- SIMD selection ("ONE48", "TWO24", "FOUR12")
)
port map(
        -- Cascade: 30-bit (each) output: Cascade Ports
        ACOUT          =>                  , -- 30-bit output: A port cascade output
        BCOUT          =>                  , -- 18-bit output: B port cascade output
        CARRYCASCOUT   =>                  , --  1-bit output: Cascade carry output
        MULTSIGNOUT    =>                  , --  1-bit output: Multiplier sign cascade output
        PCOUT          =>                  , -- 48-bit output: Cascade output
        -- Control: 1-bit (each) output: Control Inputs/Status Bits
        OVERFLOW       =>                  , --  1-bit output: Overflow in add/acc output
        PATTERNBDETECT =>                  , --  1-bit output: Pattern bar detect output
        PATTERNDETECT  =>                  , --  1-bit output: Pattern detect output
        UNDERFLOW      =>                  , --  1-bit output: Underflow in add/acc output
        -- Data & colon; 4-bit (each) output: Data Ports
        CARRYOUT       =>                  , --  4-bit output: Carry output
        P              =>                  , -- 48-bit output: Primary data output
        -- Cascade: 30-bit (each) input: Cascade Ports
        ACIN           =>                  , -- 30-bit input: A cascade data input
        BCIN           =>                  , -- 18-bit input: B cascade input
        CARRYCASCIN    =>                  , --  1-bit input: Cascade carry input
        MULTSIGNIN     =>                  , --  1-bit input: Multiplier sign input
        PCIN           =>                  , -- 48-bit input: P cascade input
        -- Control: 4-bit (each) input: Control Inputs/Status Bits
        ALUMODE        => "               ", --  4-bit input: ALU control input
        CARRYINSEL     => "               ", --  3-bit input: Carry select input
        CEINMODE       =>                  , --  1-bit input: Clock enable input for INMODEREG
        CLK            =>                  , --  1-bit input: Clock input
        INMODE         => "               ", --  5-bit input: INMODE control input ///
        OPMODE         => "               ", --  7-bit input: Operation mode input
        RSTINMODE      =>                  , --  1-bit input: Reset input for INMODEREG
        -- Data & colon; 30-bit (each) input: Data Ports
        A              =>                  , -- 30-bit input: A data input
        B              =>                  , -- 18-bit input: B data input
        C              =>                  , -- 48-bit input: C data input
        CARRYIN        =>                  , --  1-bit input: Carry input signal
```

```
            D              =>                  , -- 25-bit input: D data input
            -- Reset/Clock Enable: 1-bit (each) input: Reset/Clock Enable Inputs
            CEA1           =>                  , --  1-bit input: Clock enable input for 1st stage AREG
            CEA2           =>                  , --  1-bit input: Clock enable input for 2nd stage AREG
            CEAD           =>                  , --  1-bit input: Clock enable input for ADREG
            CEALUMODE      =>                  , --  1-bit input: Clock enable input for ALUMODERE
            CEB1           =>                  , --  1-bit input: Clock enable input for 1st stage BREG
            CEB2           =>                  , --  1-bit input: Clock enable input for 2nd stage BREG
            CEC            =>                  , --  1-bit input: Clock enable input for CREG
            CECARRYIN      =>                  , --  1-bit input: Clock enable input for CARRYINREG
            CECTRL         =>                  , --  1-bit input: Clock enable input for OPMODEREG and CARRYINSELREG
            CED            =>                  , --  1-bit input: Clock enable input for DREG
            CEM            =>                  , --  1-bit input: Clock enable input for MREG
            CEP            =>                  , --  1-bit input: Clock enable input for PREG
            RSTA           =>                  , --  1-bit input: Reset input for AREG
            RSTALLCARRYIN  =>                  , --  1-bit input: Reset input for CARRYINREG
            RSTALUMODE     =>                  , --  1-bit input: Reset input for ALUMODEREG
            RSTB           =>                  , --  1-bit input: Reset input for BREG
            RSTC           =>                  , --  1-bit input: Reset input for CREG
            RSTCTRL        =>                  , --  1-bit input: Reset input for OPMODEREG and CARRYINSELREG
            RSTD           =>                  , --  1-bit input: Reset input for DREG and ADREG
            RSTM           =>                  , --  1-bit input: Reset input for MREG
            RSTP           =>                    --  1-bit input: Reset input for PREG
        );
        ...


end architecture RTL of dsp_example;
```

Wann lohnt es sich, die DSP Slices zu verwenden?