Technische Universität Braunschweig

Chair for Chip Design for Embedded Computing

Hardware-Software-Systeme

Übung 12: FPGA Elemente: DSP

M.Sc. Eike Trumann, M. Sc. Jasper Homann, Prof. Dr.-Ing. G. Payá Vayá,
23.01.2026

Finite-Impulse-Response Filter (FIR)

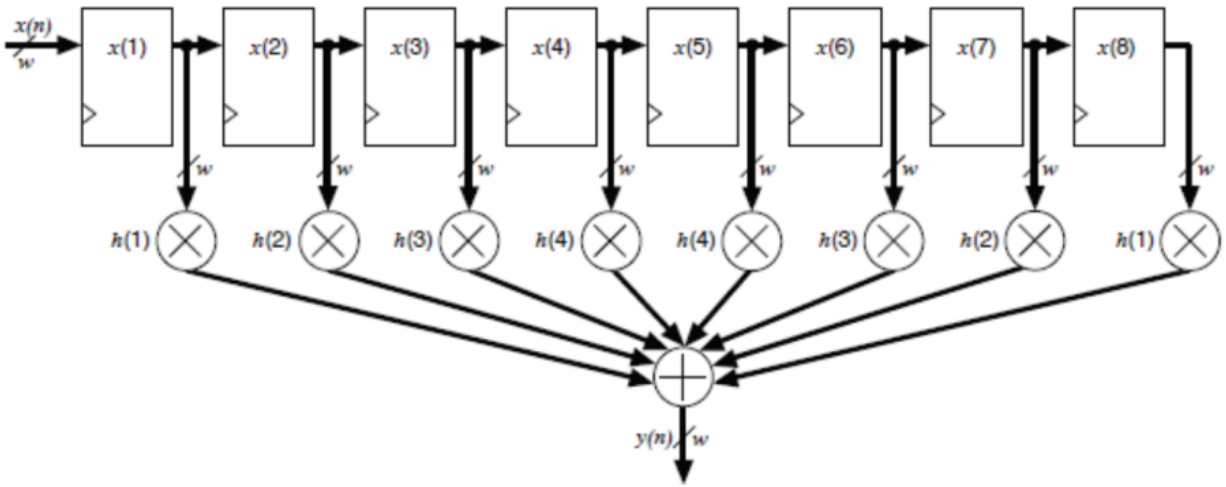

Finite-Impulse-Response Filter (FIR)

Das folgende Datenflussdiagramm eines 4-tap FIR Filters soll in Hardware realisiert werden. Alle Eingangs-Datensignale haben ein signed 16-bit Format. Die Koeffizienten haben ebenfalls signed 16-bit und liegen in einem (externen) Register.

Die Elemente (des FIR) sind:

z^{-1}	Register
x	Multiplikationen
$+$	Additionen
$coeff_x$	Koeffizienten
d_{in}, d_x, d_{out}	Eingangs-/Zwischen- und Ausgangsdaten

Finite-Impulse-Response Filter (FIR)

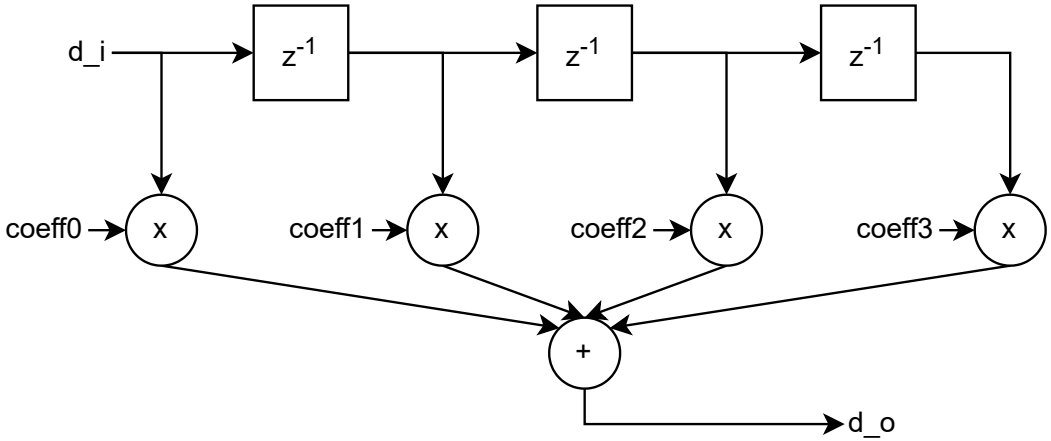

Bennen Sie in der Abbildung oben alle noch unbenannten Signale.

FIR Implementierung

Beschreiben Sie das FIR-Modul in VHDL

```
library IEEE;
use IEEE.std_logic_1164.all;
use ieee.numeric_std.all;

entity FIR is
port(
        clk, rst_n                          : in  std_ulogic;
        coeff0, coeff1, coeff2, coeff3 : in  signed(15 downto 0);
        d_i                                 : in  signed(15 downto 0);
        d_o                                 : out signed(31 downto 0)
);
end entity;

architecture RTL of FIR is
...
```

Synthese FIR

DEMO

DSPs

Welche Operationen können durch eine DSP Slice berechnet werden?

DSP Slice DSP48E1 (Xilinx)

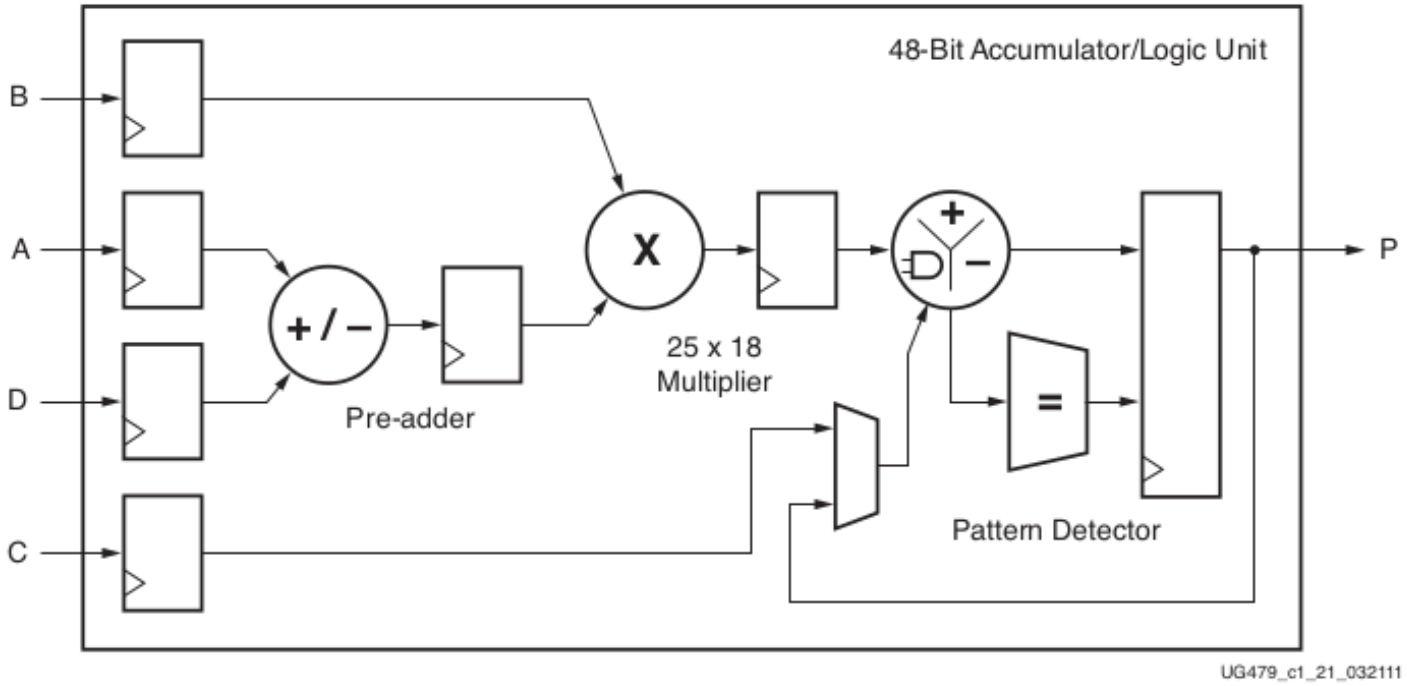

Figure 1-1: **Basic DSP48E1 Slice Functionality**

DSP Slice DSP48E1 (Xilinx)

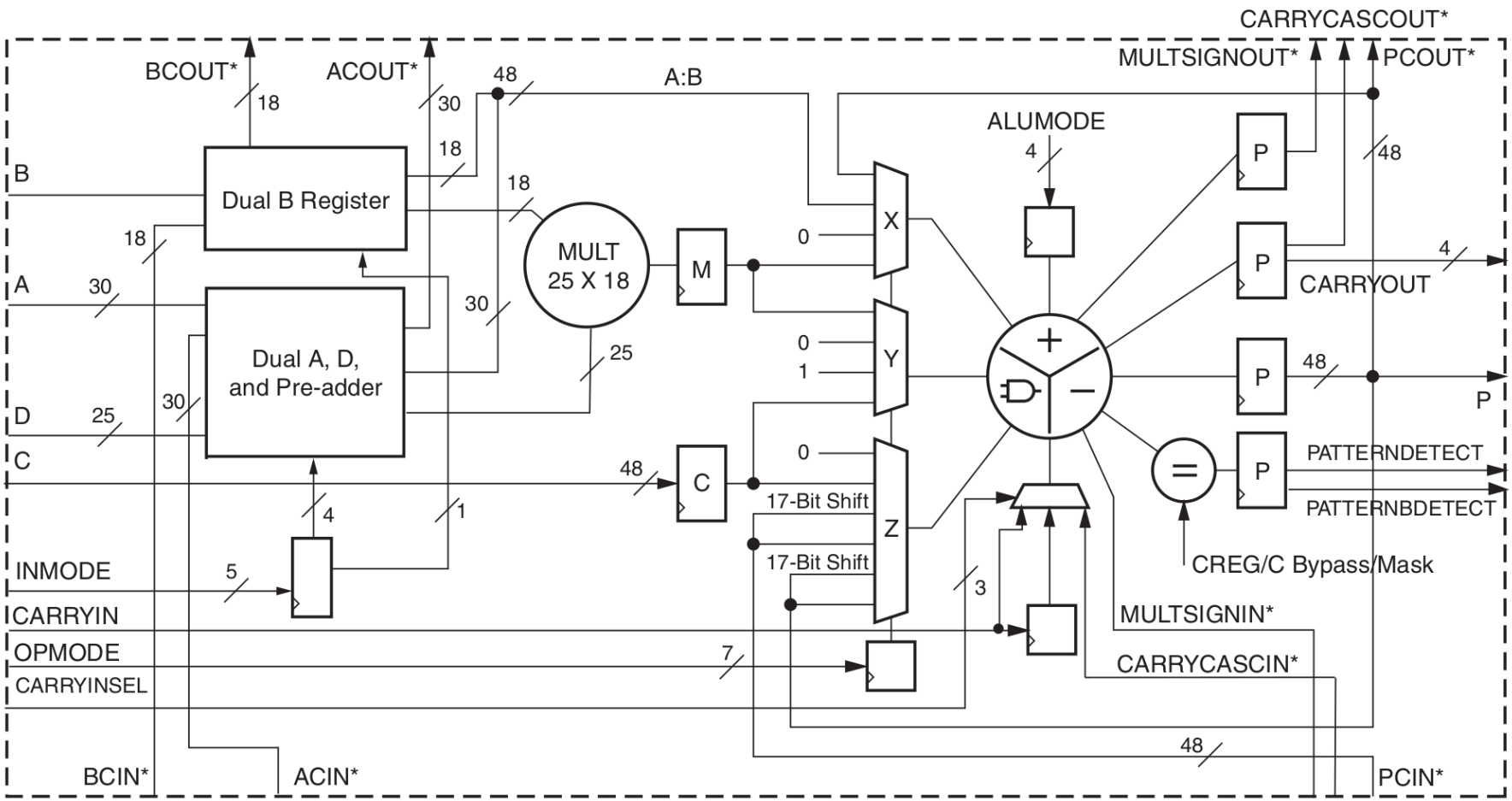

*These signals are dedicated routing paths internal to the DSP48E1 column. They are not accessible via fabric routing resources.

UG369_c1_01_052109

DSP Slice DSP48E1 (Xilinx)

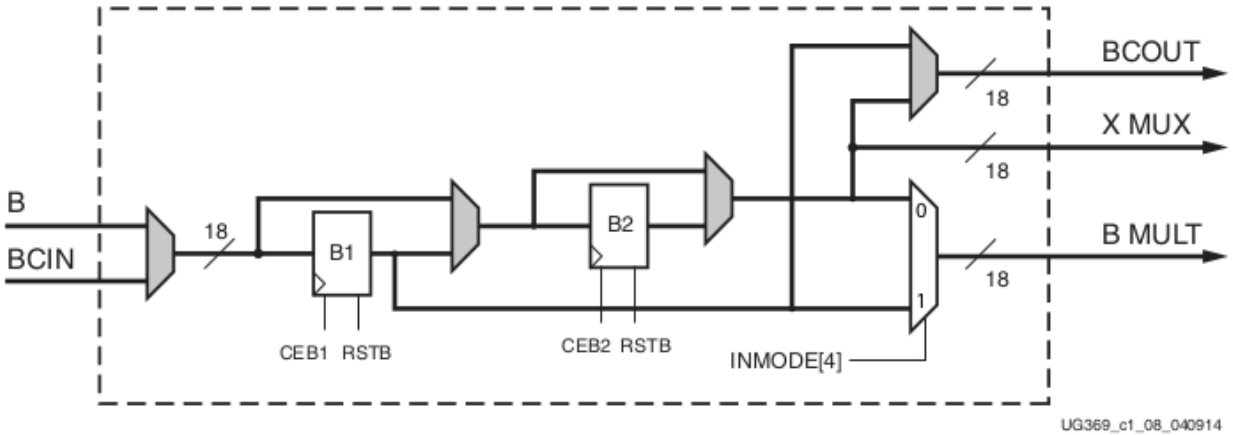

Figure 2-8: **Dual B Register Logic**

DSP Slice DSP48E1 (Xilinx)

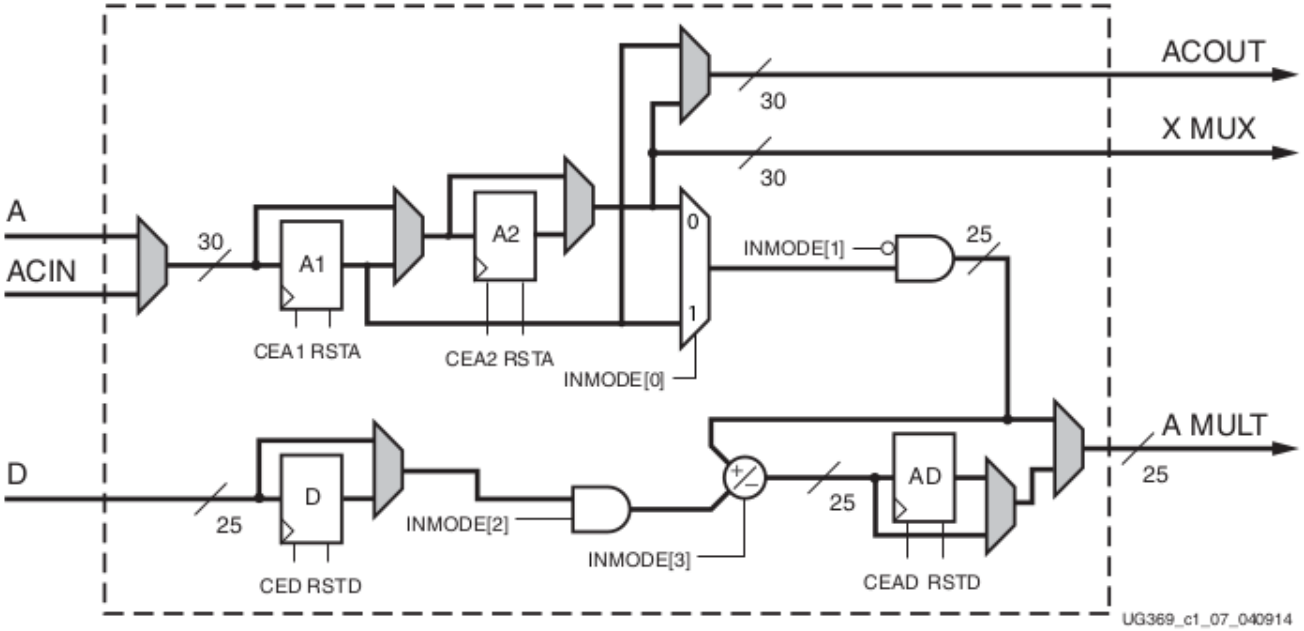

Figure 2-7: **Dual A, D, and Pre-adder Logic**

DSP Slice DSP48E1 (Xilinx)

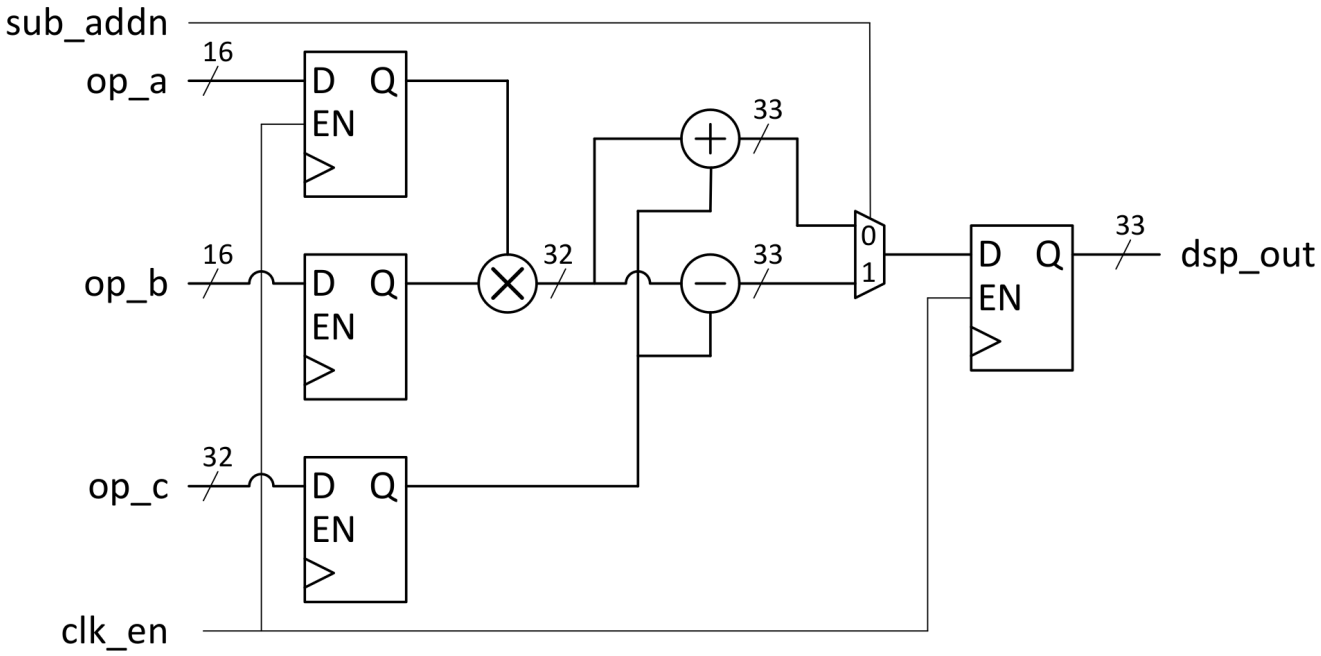

Tragen Sie in der Abbildung ein, welche (internen) Signale und Register des DSP auf die Elemente der Schaltung abgebildet werden.

DSP Slice DSP48E1 (Xilinx)

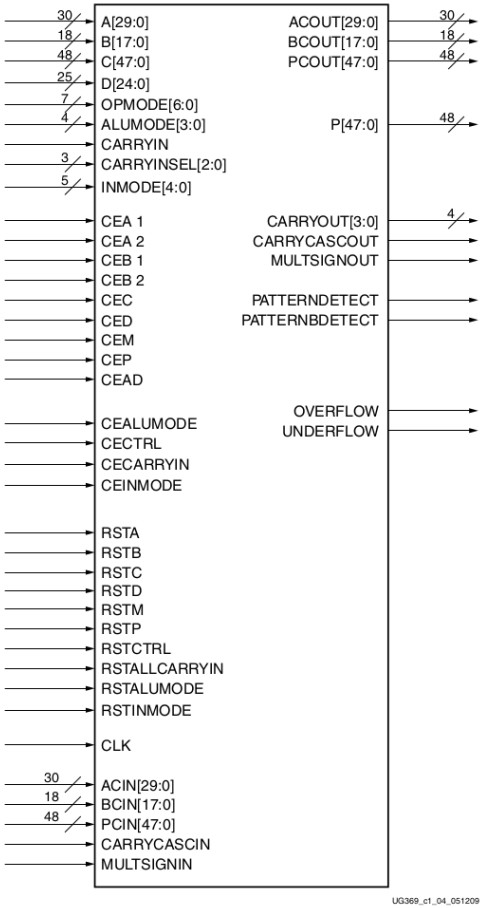

Figure 2-4: **DSP48E1 Slice Primitive**

DSP Slice DSP48E1 (Xilinx) Generics 1/2

```
...
DSP48E1_inst1 : DSP48E1
generic map(
 -- Feature Control Attributes: Data Path Selection
 A_INPUT            => "     ", -- Selects A input source, "DIRECT" (A port) or "CASCADE" (ACIN port)
 B_INPUT            => "     ", -- Selects B input source, "DIRECT" (B port) or "CASCADE" (BCIN port)
 USE_DPORT          =>        , -- Select D port usage (TRUE or FALSE)
 USE_MULT           => "     ", -- Select multiplier usage ("MULTIPLY", "DYNAMIC", or "NONE")
 -- Pattern Detector Attributes: Pattern Detection Configuration
 AUTORESET_PATDET   => "     ", -- "NO_RESET", "RESET_MATCH", "RESET_NOT_MATCH"
 MASK               =>        , -- 48-bit mask value for pattern detect (1=ignore)
 PATTERN            =>        , -- 48-bit pattern match for pattern detect
 SEL_MASK           => "     ", -- "C", "MASK", "ROUNDING_MODE1", "ROUNDING_MODE2"
 SEL_PATTERN        => "     ", -- Select pattern value ("PATTERN" or "C")
 USE_PATTERN_DETECT => "     ", -- Enable pattern detect ("PATDET" or "NO_PATDET")
 ...
```

DSP Slice DSP48E1 (Xilinx) Generics 2/2

```
...
 -- Register Control Attributes: Pipeline Register Configuration
 ACASCREG          =>        , -- Number of pipeline stages between A/ACIN and ACOUT (0, 1 or 2)
 ADREG             =>        , -- Number of pipeline stages for pre-adder (0 or 1)
 ALUMODEREG        =>        , -- Number of pipeline stages for ALUMODE (0 or 1)
 AREG              =>        , -- Number of pipeline stages for A (0, 1 or 2)
 BCASCREG          =>        , -- Number of pipeline stages between B/BCIN and BCOUT (0, 1 or 2)
 BREG              =>        , -- Number of pipeline stages for B (0, 1 or 2)
 CARRYINREG        =>        , -- Number of pipeline stages for CARRYIN (0 or 1)
 CARRYINSELREG     =>        , -- Number of pipeline stages for CARRYINSEL (0 or 1)
 CREG              =>        , -- Number of pipeline stages for C (0 or 1)
 DREG              =>        , -- Number of pipeline stages for D (0 or 1)
 INMODEREG         =>        , -- Number of pipeline stages for INMODE (0 or 1)
 MREG              =>        , -- Number of multiplier pipeline stages (0 or 1)
 OPMODEREG         =>        , -- Number of pipeline stages for OPMODE (0 or 1)
 PREG              =>        , -- Number of pipeline stages for P (0 or 1)
 USE_SIMD          => "     "  -- SIMD selection ("ONE48", "TWO24", "FOUR12")
)
...
```

DSP Slice DSP48E1 (Xilinx) Ports 1/3

```
...
port map(
 -- Cascade: 30-bit (each) output: Cascade Ports
 ACOUT          =>     , -- 30-bit output: A port cascade output
 BCOUT          =>     , -- 18-bit output: B port cascade output
 CARRYCASCOUT   =>     , --  1-bit output: Cascade carry output
 MULTSIGNOUT    =>     , --  1-bit output: Multiplier sign cascade output
 PCOUT          =>     , -- 48-bit output: Cascade output

 -- Control: 1-bit (each) output: Control Inputs/Status Bits
 OVERFLOW       =>     , --  1-bit output: Overflow in add/acc output
 PATTERNBDETECT =>     , --  1-bit output: Pattern bar detect output
 PATTERNDETECT  =>     , --  1-bit output: Pattern detect output
 UNDERFLOW      =>     , --  1-bit output: Underflow in add/acc output

 -- Data & colon; 4-bit (each) output: Data Ports
 CARRYOUT       =>     , --  4-bit output: Carry output
 P              =>     , -- 48-bit output: Primary data output
 ...
```

DSP Slice DSP48E1 (Xilinx) Ports 2/3

```
...
-- Cascade: 30-bit (each) input: Cascade Ports
ACIN           =>     , -- 30-bit input: A cascade data input
BCIN           =>     , -- 18-bit input: B cascade input
CARRYCASCIN    =>     , --  1-bit input: Cascade carry input
MULTSIGNIN     =>     , --  1-bit input: Multiplier sign input
PCIN           =>     , -- 48-bit input: P cascade input

-- Control: 4-bit (each) input: Control Inputs/Status Bits
ALUMODE        => "  ", --  4-bit input: ALU control input
CARRYINSEL     => "  ", --  3-bit input: Carry select input
CEINMODE       =>     , --  1-bit input: Clock enable input for INMODEREG
CLK            =>     , --  1-bit input: Clock input
INMODE         => "  ", --  5-bit input: INMODE control input
OPMODE         => "  ", --  7-bit input: Operation mode input
RSTINMODE      =>     , --  1-bit input: Reset input for INMODEREG

-- Data & colon; 30-bit (each) input: Data Ports
A              =>     , -- 30-bit input: A data input
B              =>     , -- 18-bit input: B data input
C              =>     , -- 48-bit input: C data input
CARRYIN        =>     , --  1-bit input: Carry input signal
D              =>     , -- 25-bit input: D data input
...
```

DSP Slice DSP48E1 (Xilinx) Ports 3/3

```
...
-- Reset/Clock Enable: 1-bit (each) input: Reset/Clock Enable Inputs
CEA1           =>     , --  1-bit input: Clock enable input for 1st stage AREG
CEA2           =>     , --  1-bit input: Clock enable input for 2nd stage AREG
CEAD           =>     , --  1-bit input: Clock enable input for ADREG
CEALUMODE      =>     , --  1-bit input: Clock enable input for ALUMODERE
CEB1           =>     , --  1-bit input: Clock enable input for 1st stage BREG
CEB2           =>     , --  1-bit input: Clock enable input for 2nd stage BREG
CEC            =>     , --  1-bit input: Clock enable input for CREG
CECARRYIN      =>     , --  1-bit input: Clock enable input for CARRYINREG
CECTRL         =>     , --  1-bit input: Clock enable input for OPMODEREG and CARRYINSELREG
CED            =>     , --  1-bit input: Clock enable input for DREG
CEM            =>     , --  1-bit input: Clock enable input for MREG
CEP            =>     , --  1-bit input: Clock enable input for PREG
RSTA           =>     , --  1-bit input: Reset input for AREG
RSTALLCARRYIN  =>     , --  1-bit input: Reset input for CARRYINREG
RSTALUMODE     =>     , --  1-bit input: Reset input for ALUMODEREG
RSTB           =>     , --  1-bit input: Reset input for BREG
RSTC           =>     , --  1-bit input: Reset input for CREG
RSTCTRL        =>     , --  1-bit input: Reset input for OPMODEREG and CARRYINSELREG
RSTD           =>     , --  1-bit input: Reset input for DREG and ADREG
RSTM           =>     , --  1-bit input: Reset input for MREG
RSTP           =>       --  1-bit input: Reset input for PREG
);
...
```

DSP Slice

Wann ist die Verwendung einer DSP Slice sinnvoll?

DSP Slice vs. LUT Multiplikation | Freq

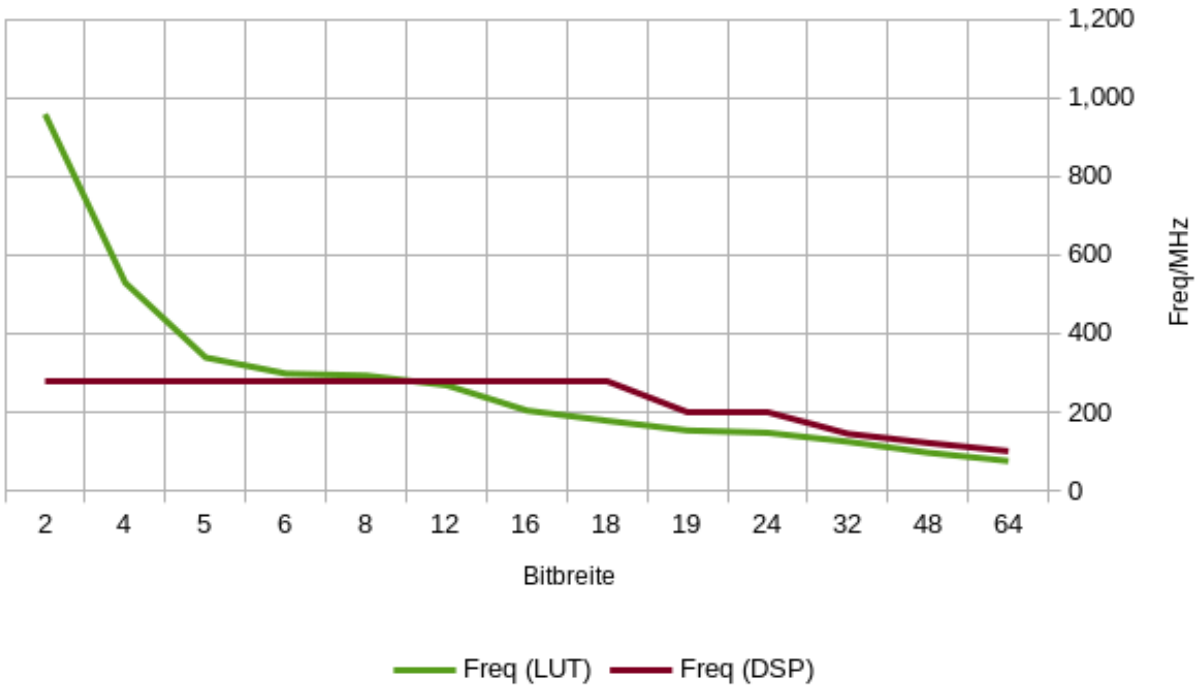

DSP Slice vs. LUT Multiplikation | DSPs

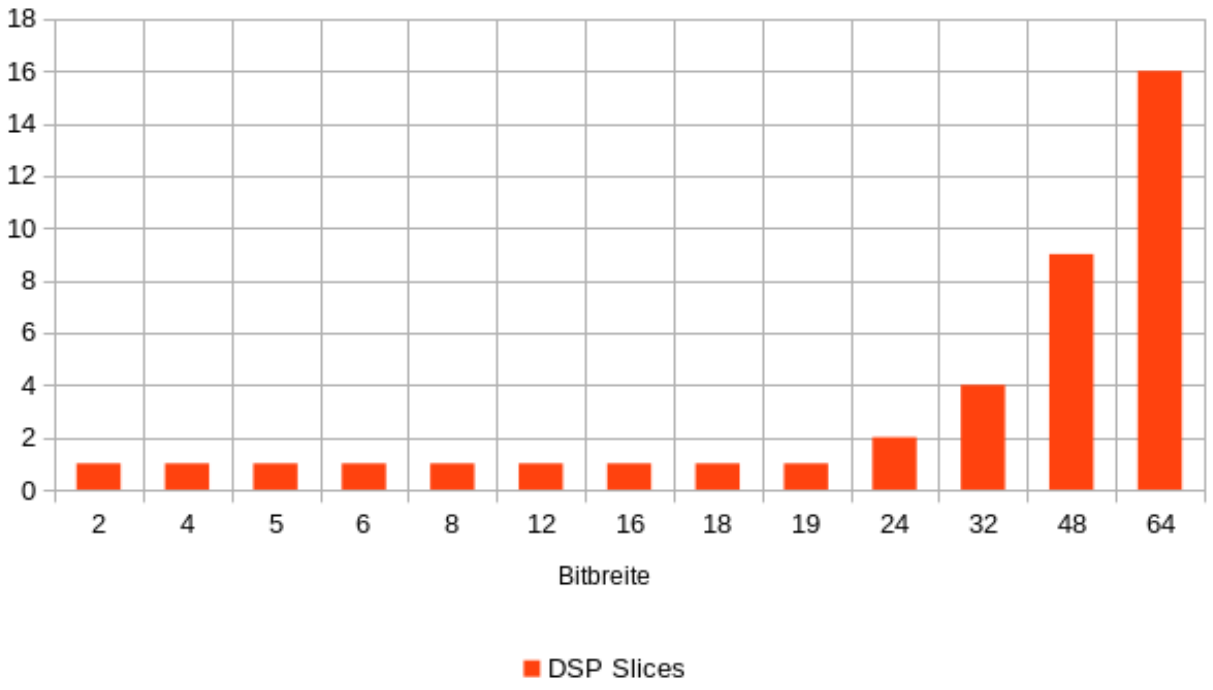
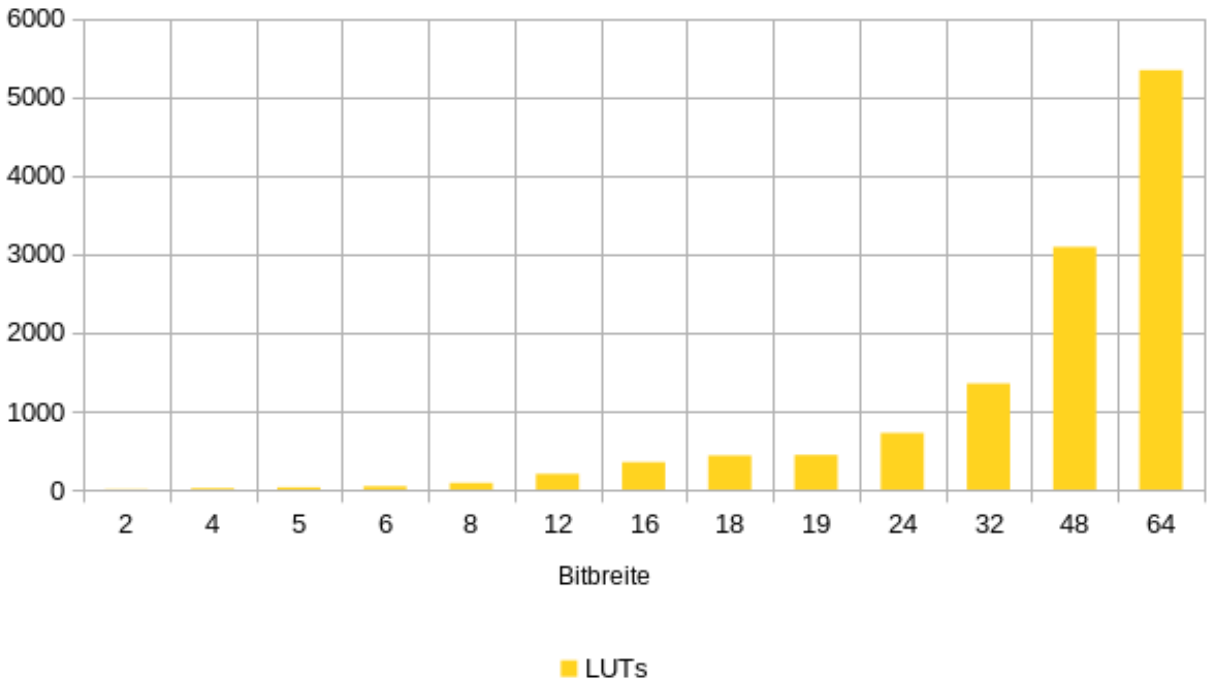
DSP Slice vs. LUT Multiplikation | LUTs