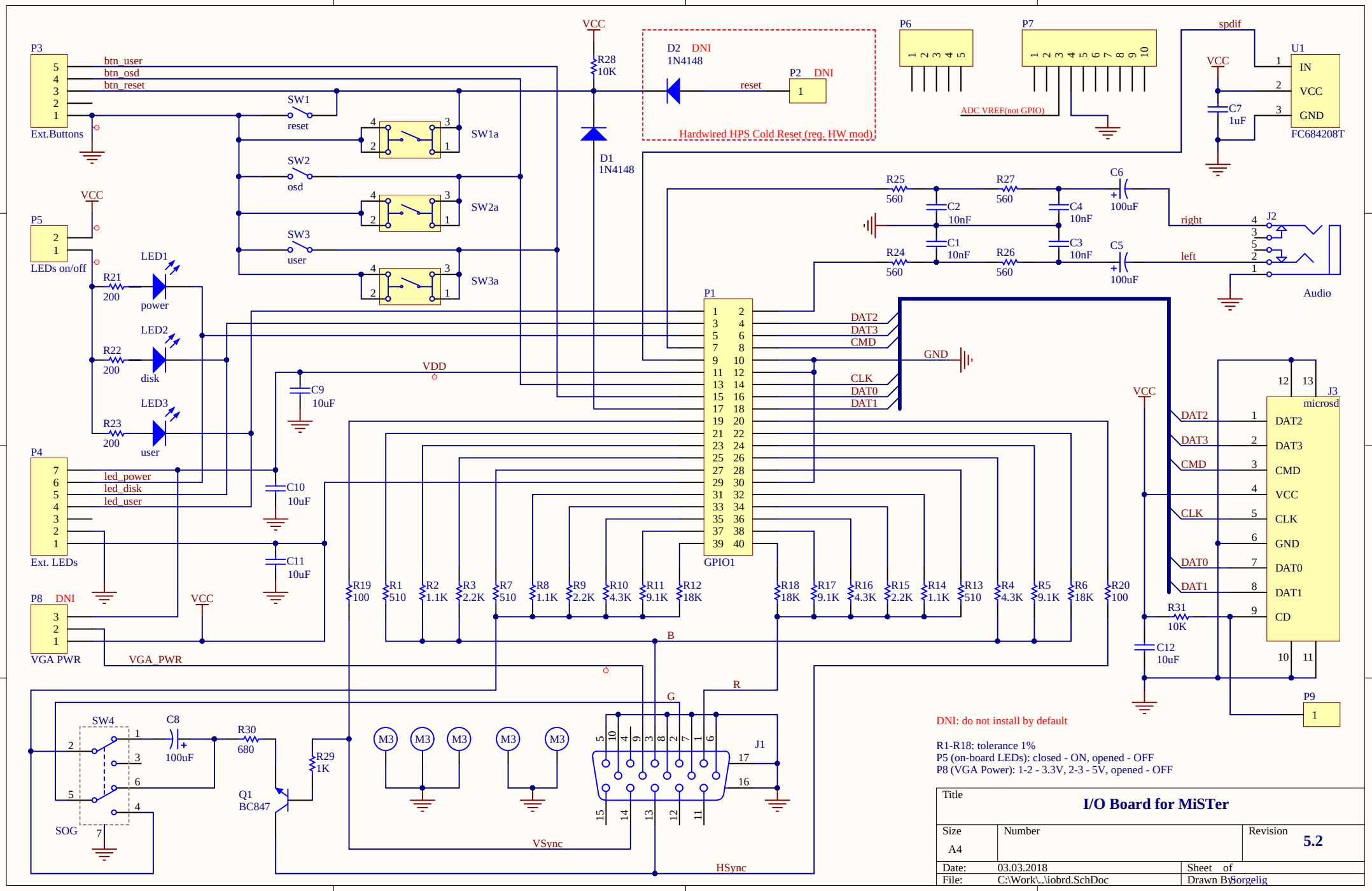
P3
btn_user
btn_osd
btn_reset
Ext.Buttons
SW1
reset
SW1a
SW2
osd
SW2a
SW3
user
SW3a
VCC
R28
10K
D2 DNI
1N4148
reset
P2 DNI
Hardwired HPS Cold Reset (reg. HW mod)
D1
1N4148
P6
P7
ADC VREF(not GPIO)
spdif
U1
IN
VCC
GND
FC684208T
C7
1uF
P5
LEDs on/off
LED1
R21
200
power
LED2
R22
disk
LED3
R23
user
P4
led_power
led_disk
led_user
Ext. LEDs
C9
10uF
C10
10uF
C11
10uF
VDD
P1
GPIO1
DAT2
DAT3
CMD
CLK
DAT0
DAT1
GND
R25
560
R27
560
C2
10nF
C4
10nF
C1
10nF
C3
10nF
R24
560
R26
560
C6
100uF
C5
100uF
right
left
J2
Audio
J3
microsd
CD
R31
10K
C12
10uF
P8 DNI
VGA PWR
VGA_PWR
R19
100
R1
510
R2
1.1K
R3
2.2K
R7
510
R8
1.1K
R9
2.2K
R10
4.3K
R11
9.1K
R12
18K
R18
18K
R17
9.1K
R16
4.3K
R15
2.2K
R14
1.1K
R13
510
R4
4.3K
R5
9.1K
R6
18K
R20
100
B
G
R
SW4
SOG
C8
100uF
R30
680
R29
1K
Q1
BC847
M3
J1
VSync
HSync
P9
DNI: do not install by default
R1-R18: tolerance 1%
P5 (on-board LEDs): closed - ON, opened - OFF
P8 (VGA Power): 1-2 - 3.3V, 2-3 - 5V, opened - OFF
Title
I/O Board for MiSTer
Size
A4
Number
Revision
5.2
Date: 03.03.2018
Sheet of
File: C:\Work\..\iobrd.SchDoc
Drawn By: Sorgelig

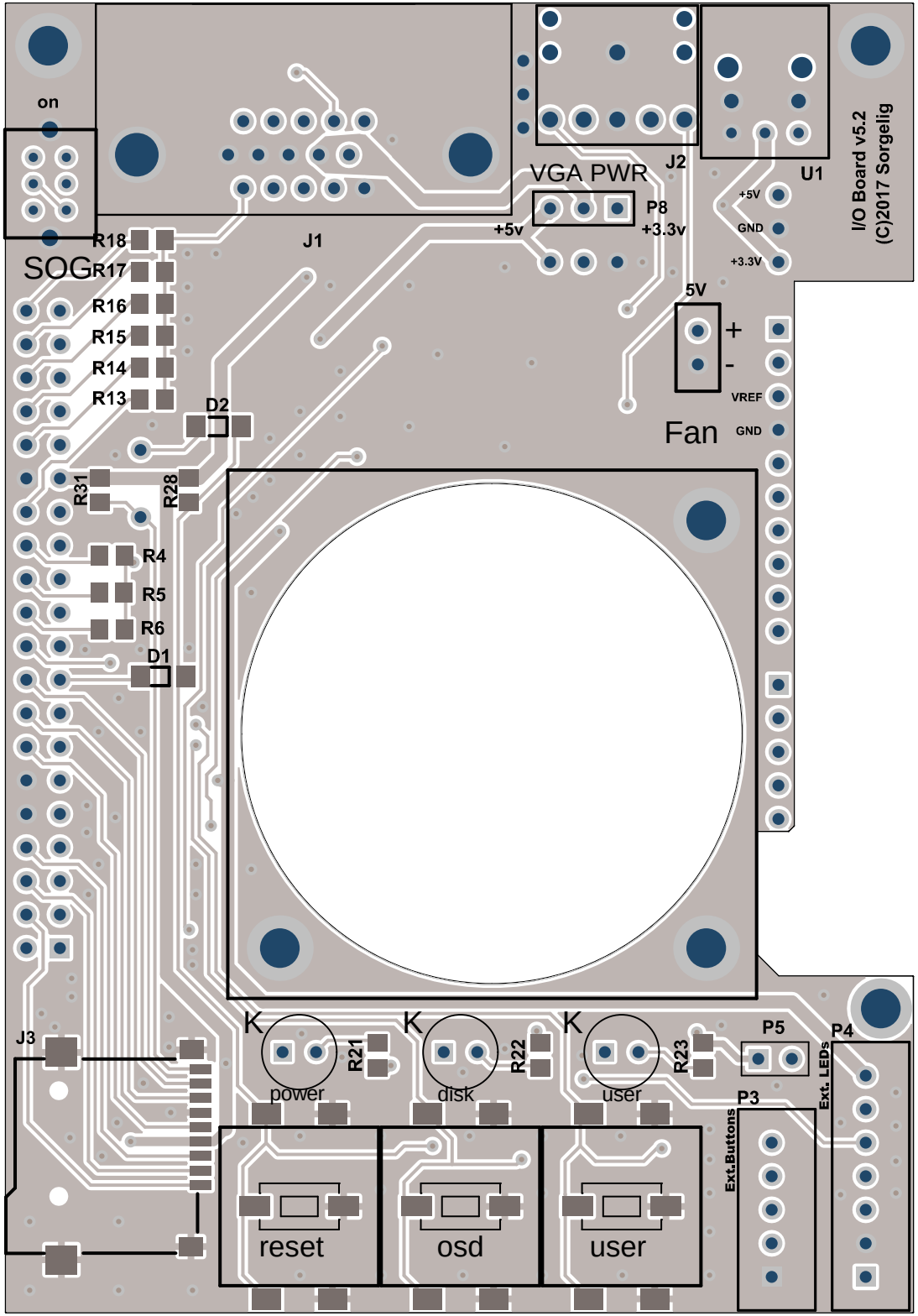
on
SOG
R18
R17
R16
R15
R14
R13
J1
VGA PWR
J2
P8
+5v
+3.3v
U1
+5V
GND
+3.3V
I/O Board v5.2
(C)2017 Sorgelig
5V
+
-
VREF
GND
Fan
D2
R31
R28
R4
R5
R6
D1
J3
K
K
K
R21
R22
R23
P5
P4
power
disk
user
P3
Ext.Buttons
Ext. LEDs
reset
osd
user

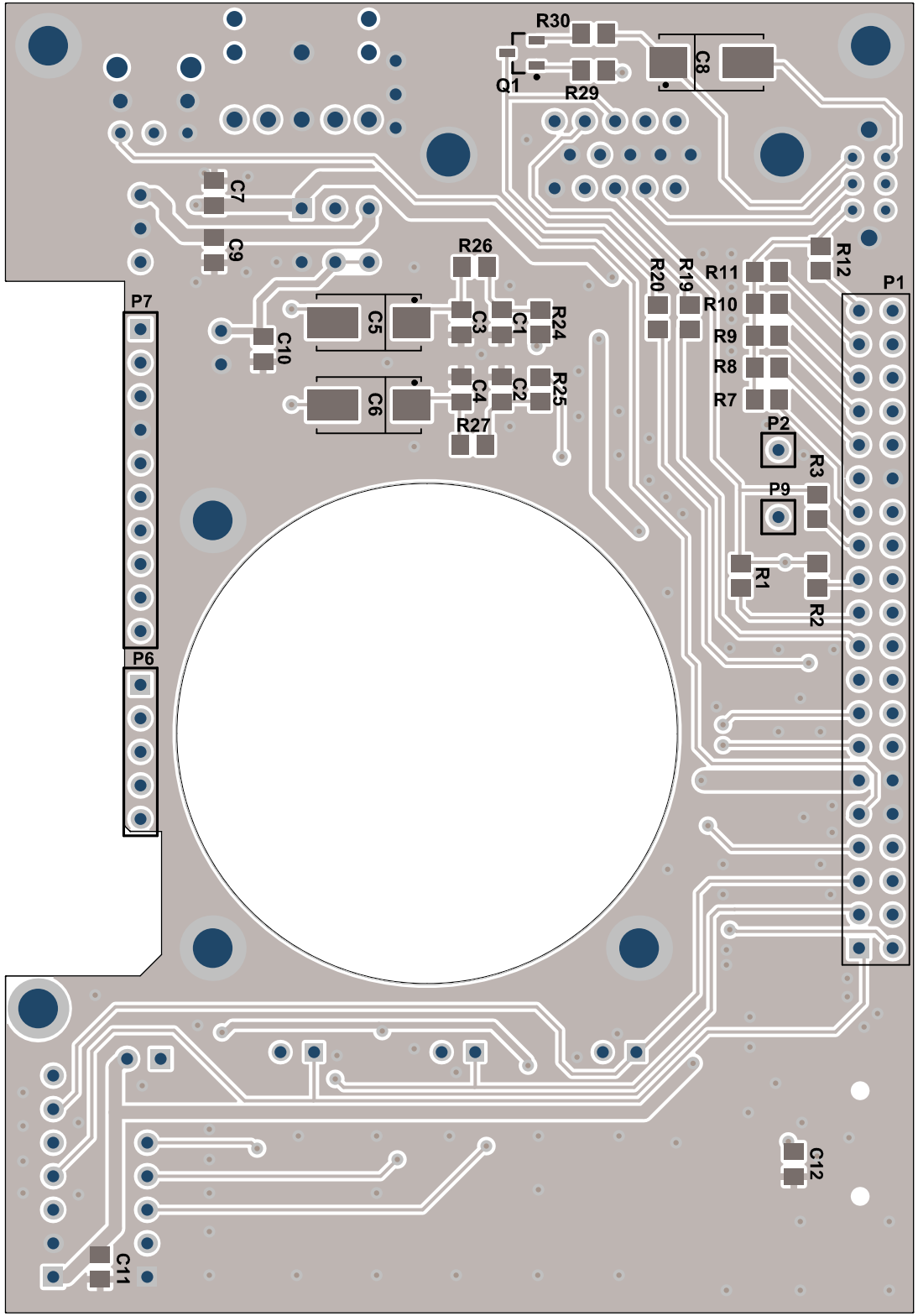
R30
Q1
R29
C8
C7
C9
R26
R20
R19
R11
R12
P1
P7
C5
C3
C1
R24
R10
C10
R9
R8
C6
C4
C2
R25
R7
R27
P2
R3
P9
R1
R2
P6
C12
C11