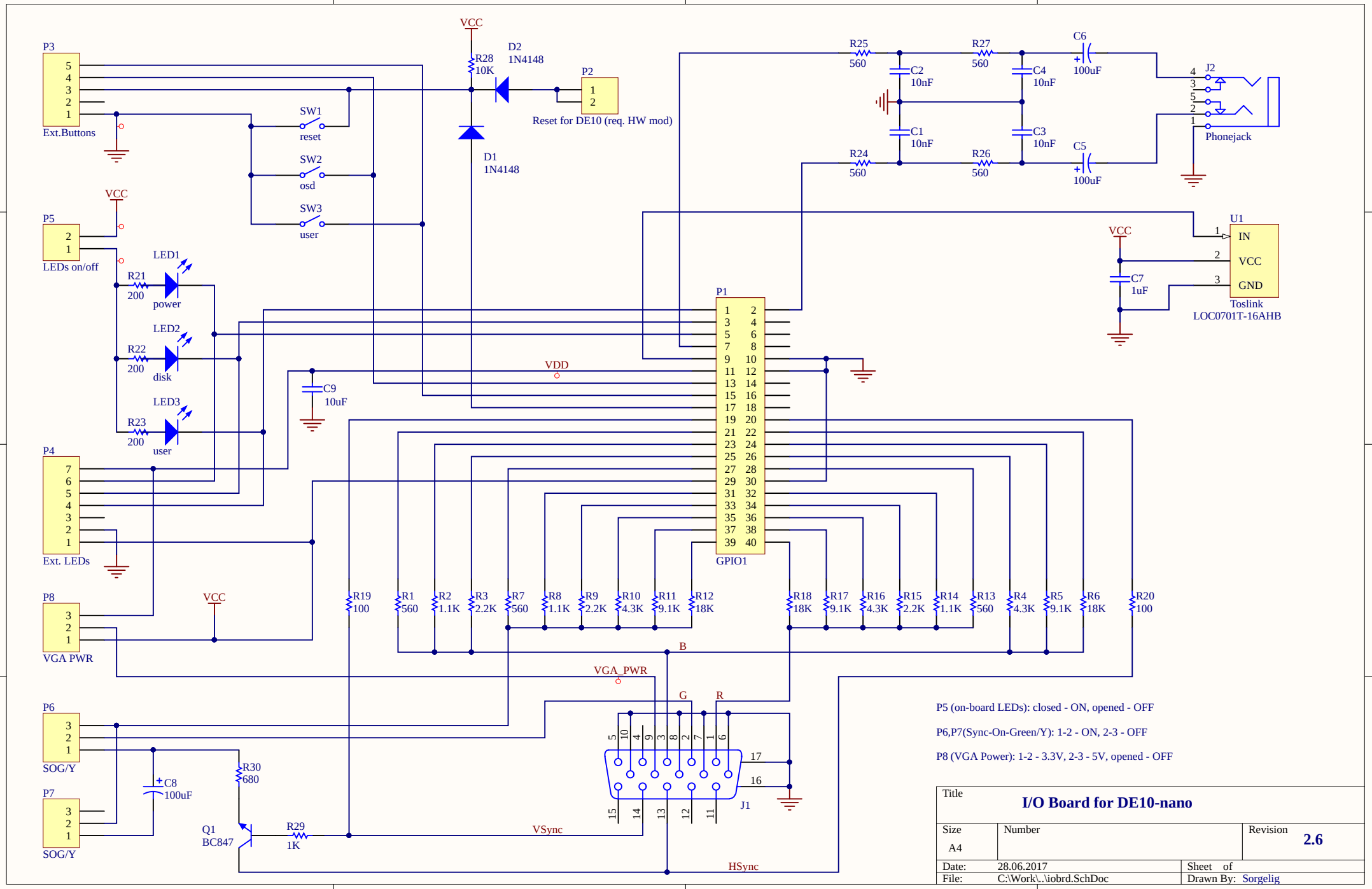
P3
Ext.Buttons
VCC
R28
10K
D2
1N4148
P2
Reset for DE10 (req. HW mod)
D1
1N4148
SW1
reset
SW2
osd
SW3
user
R25
560
R27
560
C6
100uF
C2
10nF
C4
10nF
C1
10nF
C3
10nF
R24
560
R26
560
C5
100uF
J2
Phonejack
P5
LEDs on/off
LED1
R21
200
power
LED2
R22
200
disk
LED3
R23
200
user
U1
IN
VCC
GND
Toslink
LOC0701T-16AHB
C7
1uF
P1
GPIO1
VDD
C9
10uF
P4
Ext. LEDs
P8
VGA PWR
R19
100
R1
560
R2
1.1K
R3
2.2K
R7
560
R8
1.1K
R9
2.2K
R10
4.3K
R11
9.1K
R12
18K
R18
18K
R17
9.1K
R16
4.3K
R15
2.2K
R14
1.1K
R13
560
R4
4.3K
R5
9.1K
R6
18K
R20
100
B
VGA_PWR
G
R
P6
SOG/Y
P7
SOG/Y
C8
100uF
R30
680
Q1
BC847
R29
1K
VSync
HSync
J1
P5 (on-board LEDs): closed - ON, opened - OFF
P6,P7(Sync-On-Green/Y): 1-2 - ON, 2-3 - OFF
P8 (VGA Power): 1-2 - 3.3V, 2-3 - 5V, opened - OFF
Title
I/O Board for DE10-nano
Size
A4
Number
Revision
2.6
Date: 28.06.2017
Sheet of
File: C:\Work\..\iobrd.SchDoc
Drawn By: Sorgelig

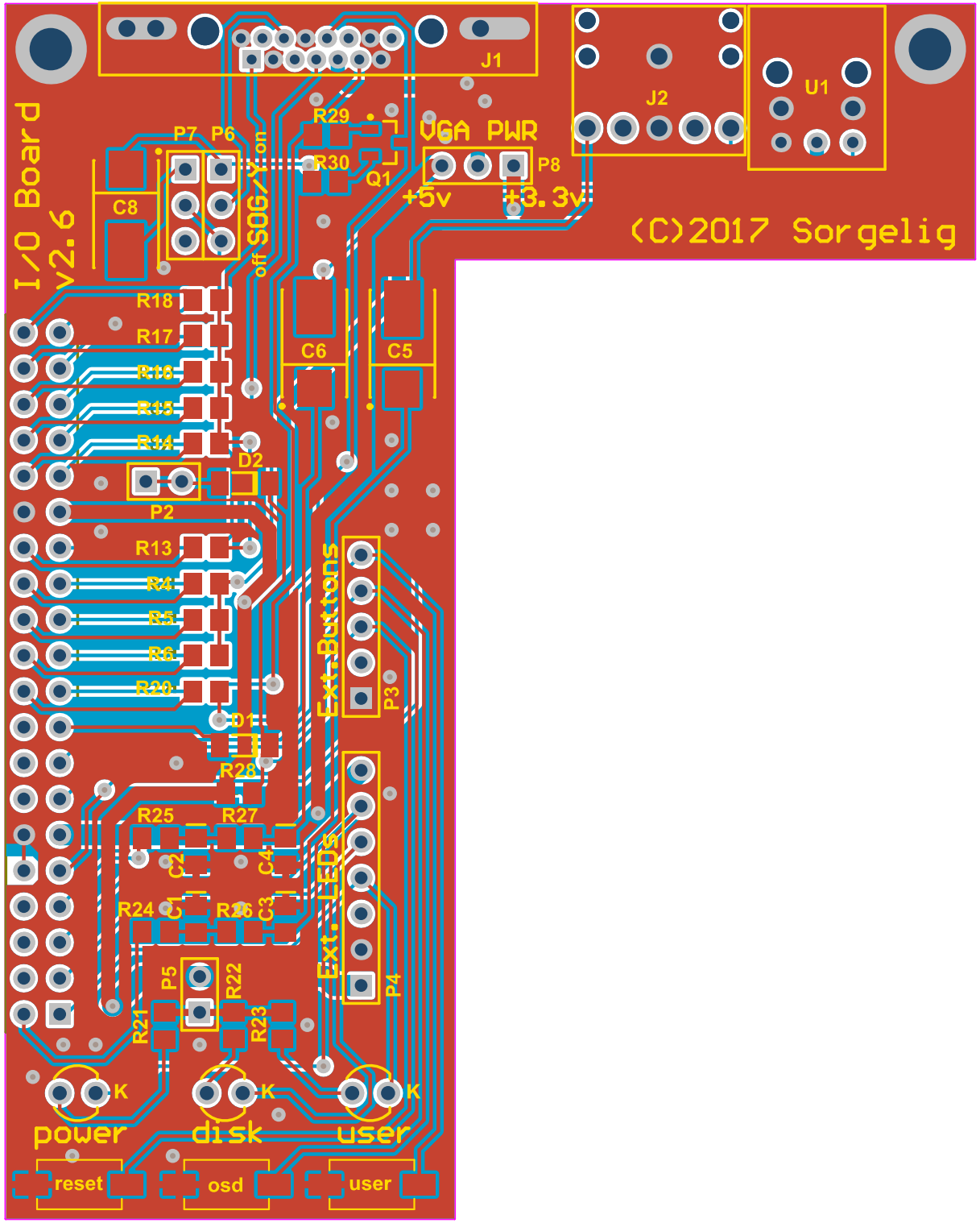
I/O Board
v2.6
J1
J2
U1
P7
P6
off SOG/Y on
R29
R30
Q1
VGA PWR
P8
+5v
+3.3v
(C)2017 Sorgelig
C8
R18
R17
R16
R15
R14
D2
P2
C6
C5
R13
R4
R5
R6
R20
D1
Ext. Buttons
P3
R28
R25
R27
C2
C4
R24
C1
R26
C3
Ext. LEDs
P5
R22
R21
R23
P4
K
K
K
power
disk
user
reset
osd
user