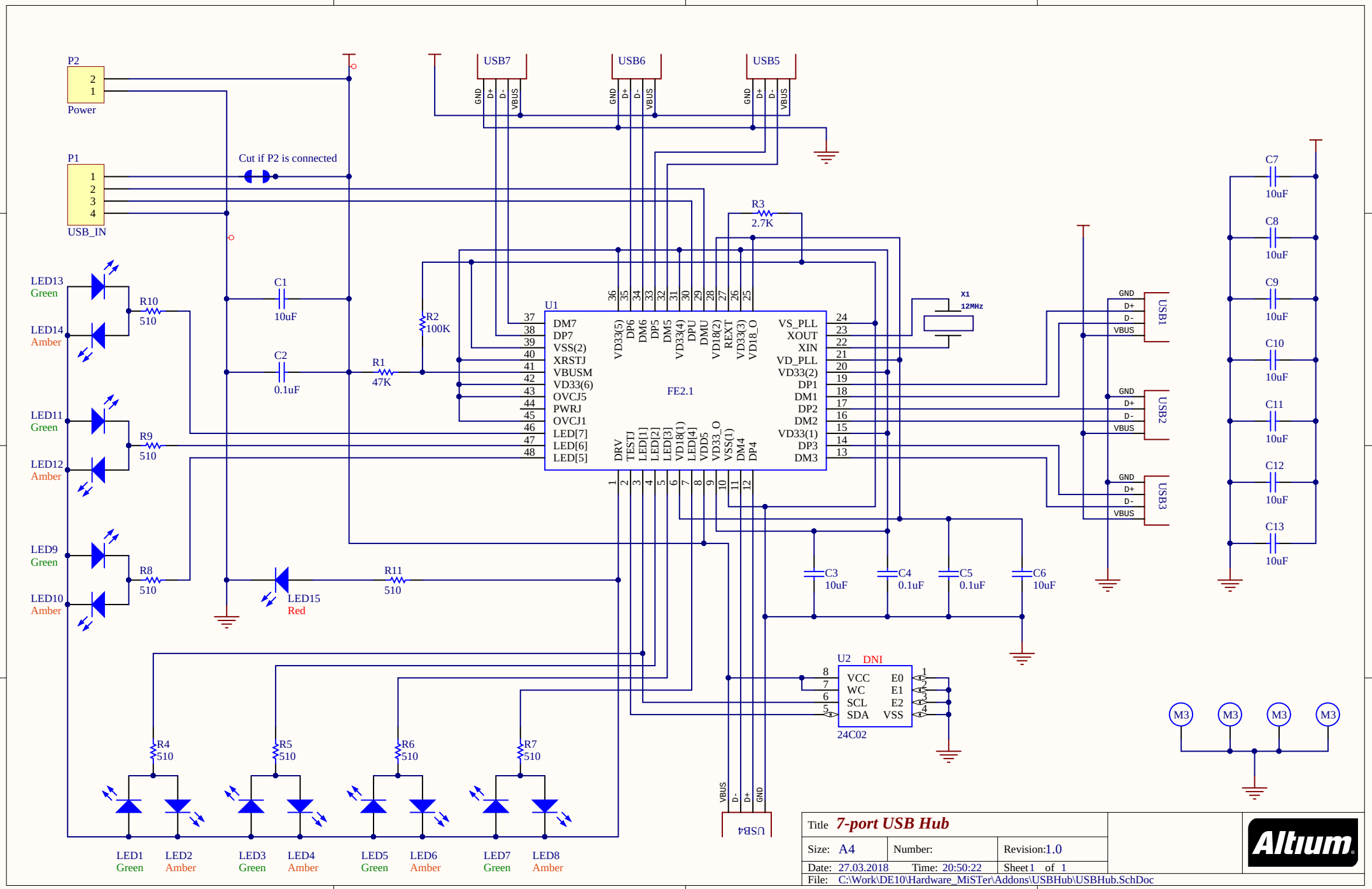
P2
Power
P1
USB_IN
Cut if P2 is connected
USB7
USB6
USB5
USB4
USB1
USB2
USB3
GND
D+
D-
VBUS
R3
2.7K
U1
FE2.1
DM7
DP7
VSS(2)
XRSTJ
VBUSM
VD33(6)
OVCJ5
PWRJ
OVCJ1
LED[7]
LED[6]
LED[5]
VD33(5)
DP6
DM6
DP5
DM5
VD33(4)
DPU
DMU
VD18(2)
REXT
VD33(3)
VD18_O
VS_PLL
XOUT
XIN
VD_PLL
VD33(2)
DP1
DM1
DP2
DM2
VD33(1)
DP3
DM3
DRV
TESTJ
LED[1]
LED[2]
LED[3]
VD18(1)
LED[4]
VDD5
VD33_O
VSS(1)
DM4
DP4
X1
12MHz
C1
10uF
C2
0.1uF
R1
47K
R2
100K
C3
10uF
C4
0.1uF
C5
0.1uF
C6
10uF
C7
10uF
C8
10uF
C9
10uF
C10
10uF
C11
10uF
C12
10uF
C13
10uF
LED13
Green
LED14
Amber
LED11
Green
LED12
Amber
LED9
Green
LED10
Amber
R10
510
R9
510
R8
510
LED15
Red
R11
510
R4
510
R5
510
R6
510
R7
510
LED1
Green
LED2
Amber
LED3
Green
LED4
Amber
LED5
Green
LED6
Amber
LED7
Green
LED8
Amber
U2
DNI
VCC
WC
SCL
SDA
E0
E1
E2
VSS
24C02
M3
M3
M3
M3
Title
7-port USB Hub
Size: A4
Number:
Revision:1.0
Date: 27.03.2018
Time: 20:50:22
Sheet 1 of 1
File: C:\Work\DE10\Hardware_MiSTer\Addons\USBHub\USBHub.SchDoc
Altium
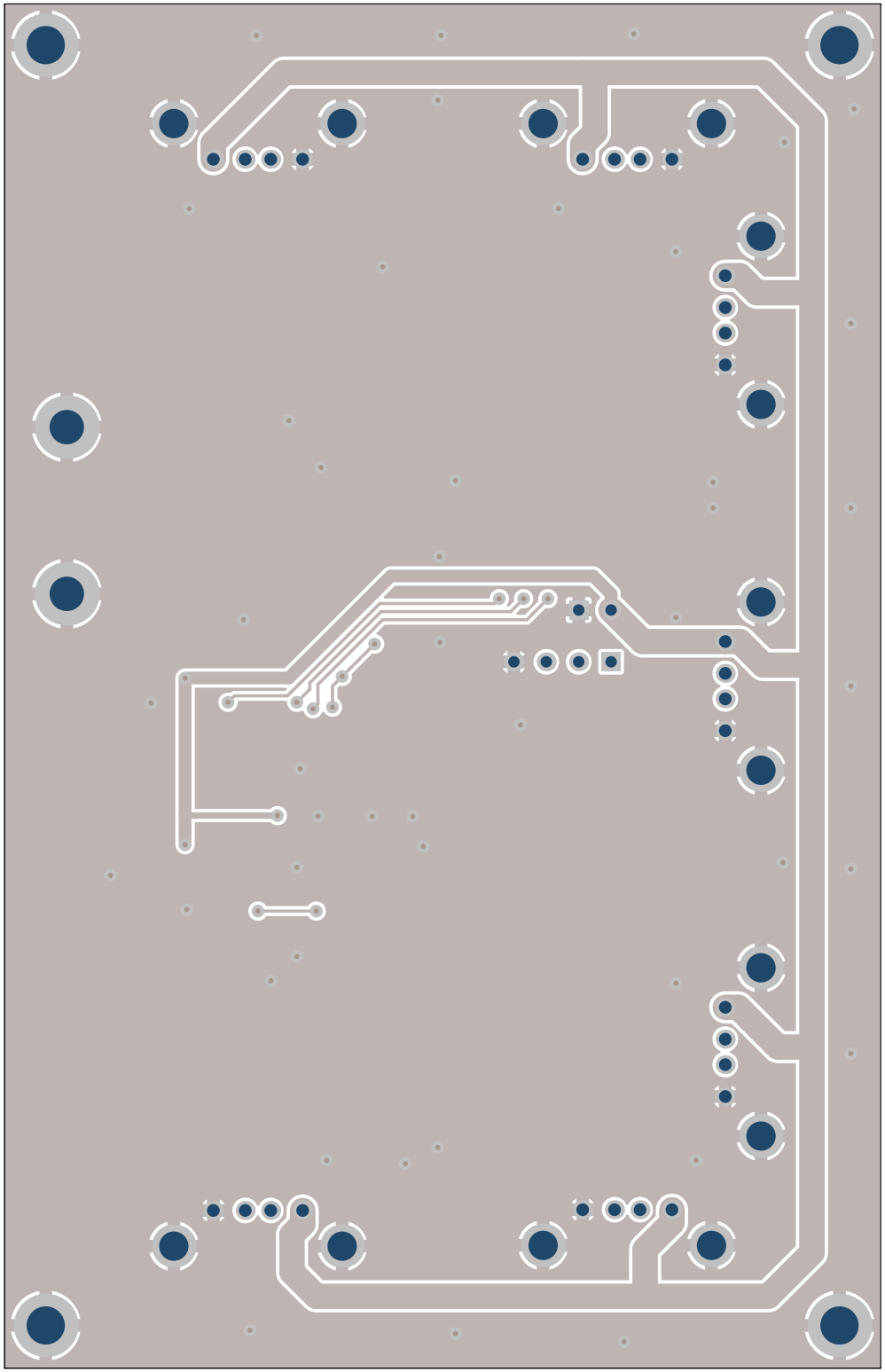
USB Hub v1.0 (c) 2018 Sorgelig
LED5
LED6
LED3
LED4
R6
R5
USB3
USB2
C9
C8
R11
LED15
LED1
C7
USB1
LED2
R4
LED9
C6
C5
R3
X1
U1
P2
P1
C11
USB5
C1
C2
LED10
R8
C3
C4
R2
R1
U2
LED11
C12
USB6
C13
USB7
C10
USB4
LED12
R9
R10
R7
LED13
LED14
LED7
LED8