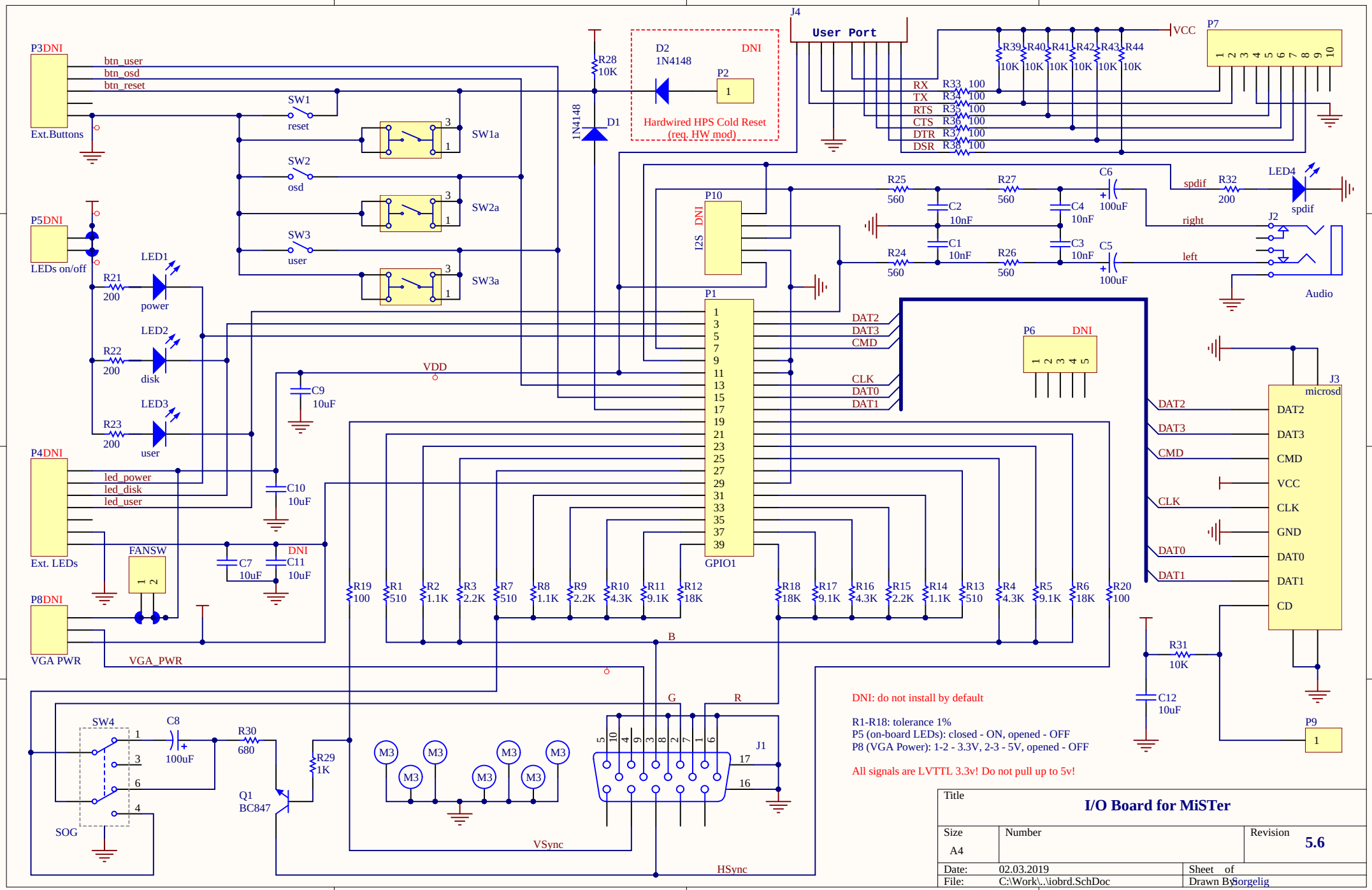
P3DNI
Ext.Buttons
btn_user
btn_osd
btn_reset
SW1
reset
SW2
osd
SW3
user
SW1a
SW2a
SW3a
P5DNI
LEDs on/off
LED1
power
LED2
disk
LED3
user
R21 200
R22 200
R23 200
P4DNI
Ext. LEDs
led_power
led_disk
led_user
FANSW
P8DNI
VGA PWR
VGA_PWR
C9 10uF
C10 10uF
C7 10uF
C11 10uF
DNI
VDD
R28 10K
1N4148
D1
D2 1N4148
DNI
P2
Hardwired HPS Cold Reset
(req. HW mod)
J4
User Port
RX
TX
RTS
CTS
DTR
DSR
R33 100
R34 100
R35 100
R36 100
R37 100
R38 100
R39 10K
R40 10K
R41 10K
R42 10K
R43 10K
R44 10K
VCC
P7
P10
I2S
P1
GPIO1
DAT2
DAT3
CMD
CLK
DAT0
DAT1
R25 560
R24 560
R27 560
R26 560
C2 10nF
C1 10nF
C4 10nF
C3 10nF
C6 100uF
C5 100uF
spdif
right
left
R32 200
LED4
spdif
J2
Audio
P6
DNI
J3
microsd
DAT2
DAT3
CMD
VCC
CLK
GND
DAT0
DAT1
CD
R31 10K
C12 10uF
P9
R19 100
R1 510
R2 1.1K
R3 2.2K
R7 510
R8 1.1K
R9 2.2K
R10 4.3K
R11 9.1K
R12 18K
R18 18K
R17 9.1K
R16 4.3K
R15 2.2K
R14 1.1K
R13 510
R4 4.3K
R5 9.1K
R6 18K
R20 100
B
G
R
J1
VSync
HSync
SW4
SOG
C8 100uF
R30 680
R29 1K
Q1 BC847
M3
DNI: do not install by default
R1-R18: tolerance 1%
P5 (on-board LEDs): closed - ON, opened - OFF
P8 (VGA Power): 1-2 - 3.3V, 2-3 - 5V, opened - OFF
All signals are LVTTL 3.3v! Do not pull up to 5v!
Title
I/O Board for MiSTer
Size
A4
Number
Revision
5.6
Date: 02.03.2019
File: C:\Work\..\iobrd.SchDoc
Sheet of
Drawn By: Sorgelig

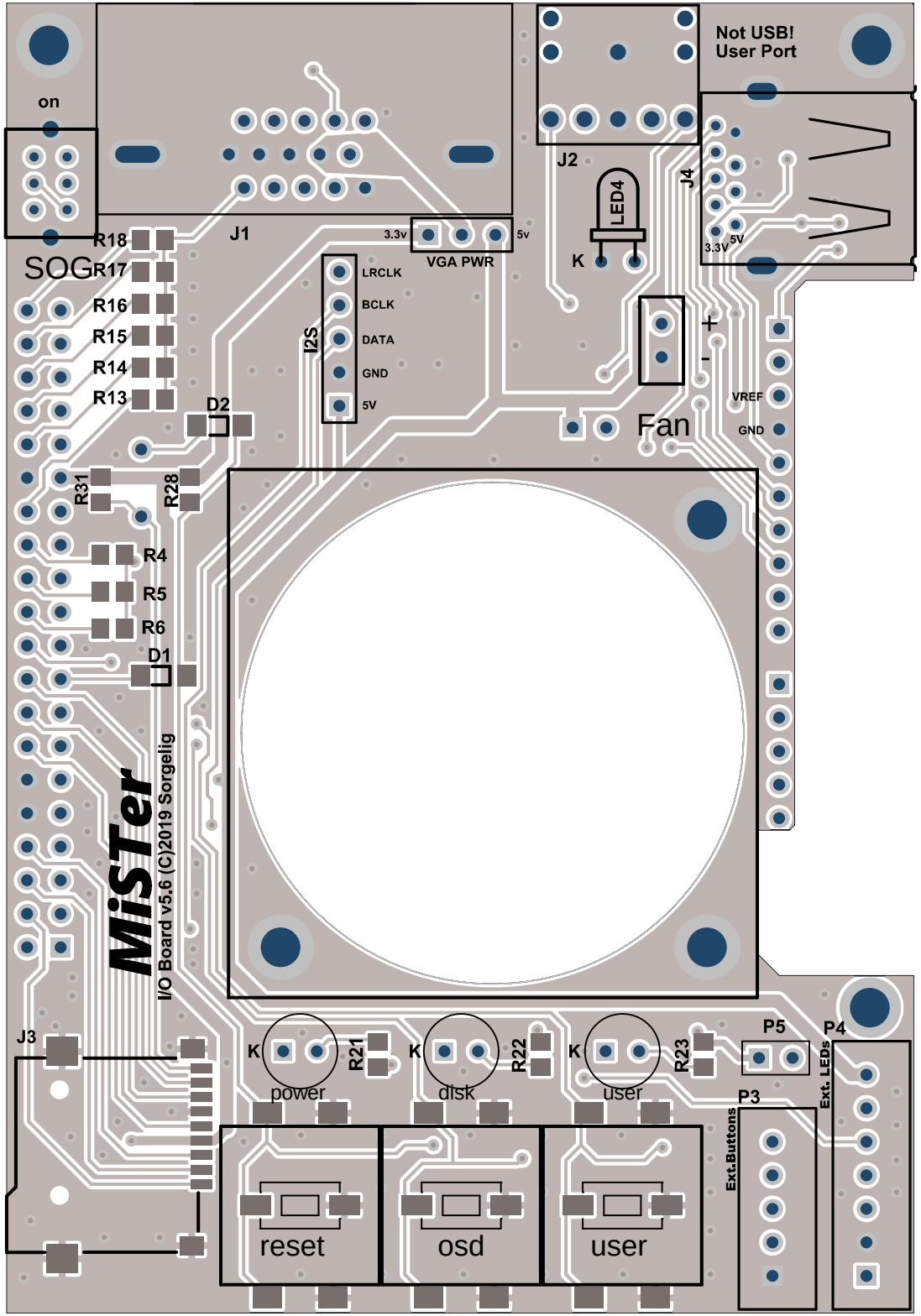
Not USB!
User Port
on
J1
J2
J4
LED4
K
3.3v
5v
VGA PWR
3.3V
5V
SOG
R18
R17
R16
R15
R14
R13
LRCLK
BCLK
DATA
GND
5V
I2S
D2
R31
R28
R4
R5
R6
D1
+
-
Fan
VREF
GND
MiSTer
I/O Board v5.6 (C)2019 Sorgelig
J3
K
R21
power
K
R22
disk
K
R23
user
P5
P4
Ext. LEDs
P3
Ext.Buttons
reset
osd
user

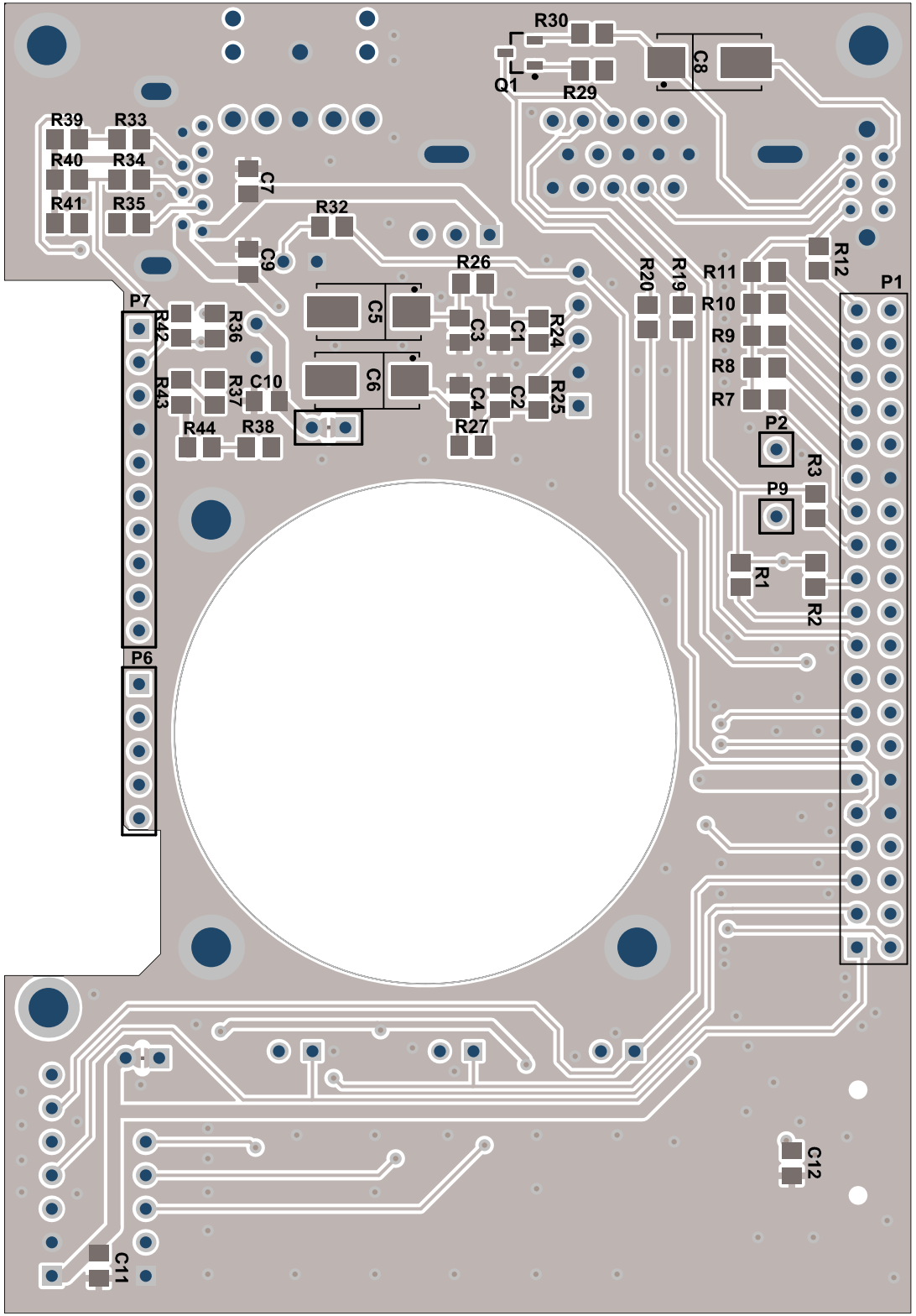
R30
Q1
R29
C8
R39
R33
R40
R34
R41
R35
C7
R32
C9
R26
C5
C3
C1
R24
C6
C4
C2
R25
R27
R36
R42
R37
R43
C10
R44
R38
P7
P6
R20
R19
R11
R10
R9
R8
R7
R12
P1
P2
R3
P9
R1
R2
C12
C11