Neural Network-Based Stock Price Prediction: A Study of LSTM, GRU, and BiLSTM Models

in partial fulfilment for the Degree of

Bachelor of Technology

In

Computer Science Engineering

(Data Science And Artificial Intelligence)

By

KHANAK GUPTA

22STUCHH010823

Under the supervision of

Dr. Pallavi Mishra

ICFAI Foundation of Higher Education (A Deemed University under Section 3 of UGC Act, 1956)

The ICFAI Foundation for Higher Education

Faculty of Science & Technology

(A Deemed to be University under Section 3 of UGC Act. 1956)
Donthanapally, Shankarapalli Road, Hyderabad - 501203, Telangana, India

Phone: +91 8417 236660/61/62; Fax: +91 8417 236671; Email: info@ifheindia.org; www.ifheindia.org

CERTIFICATE

Certified that the project work entitled Neural Network-Based Stock Price Prediction: A Study of LSTM, GRU, and BiLSTM Models has been carried out by Ms. KHANAK GUPTA Enrollment No. 22STUCH1010823 for the course of Special Project. It is also certified that all the modifications suggested have been incorporated in the report. The project report fulfils the requirements respect of the Course SP301 of the Bachelor of Technology in Computer Science Engineering (Data Science and Artificial Intelligence) and submitted to the Department of Data Science and Artificial Intelligence Engineering of The ICFAI Foundation for Higher Education in an authentic record of my own work carried out during a period from January 2025 to April 2025.

The matter presented in this report has not been submitted by me for any other course or for any other degree elsewhere.

Signature of the Instructor ***Signature of the Student***

Date: 24/04/2025
Place: Hyderabad

ABSTRACT

This study presents a comparative analysis of three popular recurrent neural network (RNN) architectures—Long Short-Term Memory (LSTM), Gated Recurrent Unit (GRU), and Bidirectional LSTM (BiLSTM)—in the context of time series forecasting. These models are evaluated based on four performance metrics: Pearson Correlation, Mean Absolute Error (MAE), Mean Squared Error (MSE), and Root Mean Squared Error (RMSE). The analysis aims to determine which architecture provides better predictive accuracy and generalization capability when modeling sequential data.

The results reveal that BiLSTM consistently outperforms both LSTM and GRU across all evaluated metrics. Specifically, BiLSTM achieves the highest Pearson Correlation, indicating a strong linear relationship between the predicted and actual values. Additionally, it records the lowest values for MAE, MSE, and RMSE, demonstrating its ability to minimize both average and squared prediction errors effectively. GRU performs moderately well, showing a strong correlation and relatively lower error metrics compared to LSTM. However, it still falls short of BiLSTM's performance. LSTM, on the other hand, exhibits the weakest performance among the three, with the lowest Pearson Correlation and highest error values, suggesting limitations in capturing the temporal dependencies within the data.

The superior performance of BiLSTM can be attributed to its ability to process input sequences in both forward and backward directions, thereby capturing more comprehensive context and long-term dependencies. These findings suggest that for tasks involving sequential data with complex temporal patterns, BiLSTM offers a significant advantage. This comparative study provides valuable insights for researchers and practitioners in selecting suitable neural architectures for time series forecasting, signal processing, and other sequence modeling tasks. Future work may explore hybrid models or enhancements incorporating attention mechanisms to further boost predictive performance.

TABLE OF CONTENTS

1. INTRODUCTION **6**

2. RELATED WORKS **8**

3. OBJECTIVE **9**

4. THEORETICAL BACKGROUND **10**
- 4.1 Long Short-Term Memory (LSTM)
- 4.2 Gated Recurrent Unit (GRU)
- 4.3 Bidirectional Long Short-Term Memory (BiLSTM)

5. DATA PREPROCESSING AND TRAINING **13**
- 5.1 Data Selection and Normalization
- 5.2 Sequence Construction
- 5.3 Train-Test Split and Validation
- 5.4 Model Training

6. EVALUATION AND VISUALIZATION **15**
- 6.1 Regression Evaluation – Stock Price Prediction
- 6.2 Classification Evaluation
- 6.3 Visualization

7. RESULTS AND OBSERVATIONS **22**
- 7.1 Quantitative Results
- 7.2 Observations

8. CONCLUSION **24**
- 8.1 Regression Performance Evaluation
- 8.2 Classification Performance Evaluation
- 8.3 Key Insights and Observations
- 8.4 Final Thoughts

9. FUTURE WORK **27**
- 9.1 Incorporating Additional Features
- 9.2 Model Optimization and Hyperparameter Tuning
- 9.3 Expanding to Multi-Step Forecasting
- 9.4 Hybrid Models
- 9.5 Real-Time Prediction and Deployment
- 9.6 Evaluation on Multiple Stocks and Market Indices

REFERENCES **28**

LIST OF FIGURES

Figure 4.1 LSTM Architecture Diagram
Figure 4.2 GRU Architecture Diagram
Figure 4.3 BiLSTM Architecture
Figure 6.1 LSTM Model Visualization
Figure 6.2 GRU Model Visualization
Figure 6.3 BiLSTM Model Visualization
Figure 6.4 LSTM Loss Vs Epoch graph
Figure 6.5 GRU Loss Vs Epoch graph
Figure 6.6 BiLSTM Loss Vs Epoch graph
Figure 6.7 Comparative Bar Graph(LSTM vs GRU vs BiLSTM)

LIST OF TABLES

Table 2.1 Related Works
Table 6.1 Results
Table 6.2 LSTM Classification Report
Table 6.3 GRU Classification Report
Table 6.4 BiLSTM Classification Report

1. INTRODUCTION

Stock market prediction has long been an area of intense interest and research, given the immense economic implications associated with accurately forecasting price movements. Financial markets are complex, dynamic systems influenced by a multitude of factors, including economic indicators, investor sentiment, geopolitical events, and company performance. Traditionally, forecasting models such as linear regression, ARIMA, and other statistical techniques have been used to analyse market trends. However, these models often struggle with the non-linear and time-dependent nature of financial data.

In recent years, the advent of deep learning has brought a paradigm shift in how predictive modeling is approached, particularly in the realm of time-series forecasting. Deep learning models, especially those based on Recurrent Neural Networks (RNNs), have shown remarkable capabilities in capturing temporal dependencies and modeling sequential data. Among these, Long Short-Term Memory (LSTM), Gated Recurrent Unit (GRU), and Bidirectional LSTM (BiLSTM) architectures have proven to be highly effective in applications ranging from language modeling to stock price forecasting.

This project aims to leverage these three RNN-based deep learning models—LSTM, GRU, and BiLSTM—to predict stock prices and classify the directional movement of stock prices (i.e., whether the price will go up or down). The objective is twofold: first, to develop a regression model capable of forecasting future stock prices based on historical data; and second, to implement a classification model that predicts the direction of price movement, which can be particularly valuable for making investment decisions.

To ensure a realistic and user-driven approach, historical stock data was sourced dynamically from Yahoo Finance using the yfinance Python library. This allowed users to input custom stock symbols and date ranges, enabling a flexible and interactive system. The raw data underwent a series of preprocessing steps, including feature selection, normalization, and the construction of time-series sequences using a sliding window technique. Only essential features such as "Open" and "Close" prices were used, and data was normalized to ensure faster convergence during model training.

Each model was trained on sequences of 60 days of historical data, with the objective of predicting the 61st day's price. This windowed format effectively captures temporal patterns and trends. The models were evaluated using regression metrics such as Mean Absolute Error (MAE), Mean Squared Error (MSE), Root Mean Squared Error (RMSE), and the Pearson correlation coefficient to quantify how well the predicted prices align with the actual values.

In addition to regression, the project included a binary classification task aimed at predicting whether the next price would go "Up" or "Down." This was evaluated using precision, recall, F1-score, and accuracy metrics to assess the classification performance of each model.

Extensive experimentation and comparison revealed that the BiLSTM model provided the most balanced and accurate performance. It achieved the lowest error values and exhibited a better ability to adapt to market volatility, thanks to its bidirectional architecture that learns from both past and future contexts within the sequence. GRU performed reasonably well and was more computationally efficient than LSTM, while the standard LSTM model showed limitations, especially in terms of delayed response to abrupt market changes.

This report provides a detailed account of the methodology followed, the technical implementations, and the results obtained from the evaluation of all three models. It further discusses the strengths and limitations of each architecture, based on both quantitative results and qualitative observations derived from visualizations.

Ultimately, the project demonstrates the potential of deep learning in financial forecasting and provides a foundational framework for building intelligent, data-driven stock prediction systems. The insights gained from this study can help investors, analysts, and researchers better understand the utility of machine learning in financial decision-making and pave the way for more sophisticated models and tools in the future.

2. RELATED WORKS

Table 2.1 Related Works

Work	Technique	Results	Limitations
Fischer & Krauss [1]	LSTM model on S&P 500 stock data	68.3% Accuracy	Limited to one market index; lacks external feature integration
Selvin et al. [2]	Compared ARIMA, LSTM, RNN, and SVM	LSTM RMSE = 0.01	Lacks classification of directional movement
Zhang et al. [3]	CNN + LSTM hybrid model	RMSE = 1.36	Computationally intensive; limited interpretability
Patel et al. [4]	SVM, ANN, Random Forest on NSE stock data	Accuracy = 90.5%	Static feature set; model performance degrades with real-time data
Chen et al. [5]	GRU with historical time-series and volume data	MAE = 0.032	Less accurate in long-term forecasting; performance drops on unseen patterns
Gudelek et al. [6]	Comparison of LSTM, GRU, and RNN for financial time-series	GRU outperformed LSTM	Generalized dataset; lacks market-specific tuning

Recent research has demonstrated the effectiveness of deep learning models, particularly recurrent neural networks, for stock market prediction. LSTM models have shown promising accuracy on major indices, though many approaches are limited by narrow focus on specific markets and lack of external feature integration. Comparative studies between ARIMA, RNN-based models, and SVMs indicate that LSTMs often yield lower prediction errors, but typically fall short in tasks involving directional movement classification. Hybrid models combining CNN and LSTM architectures have also been proposed, offering strong performance at the cost of increased computational complexity and reduced interpretability. Traditional machine learning models such as SVMs and Random Forests, when applied to financial data, have achieved high accuracy but often struggle with dynamic, real-time datasets. More recently, GRU models have gained attention for outperforming LSTMs in certain scenarios, though they too face challenges with long-term forecasting and adaptation to unseen patterns. These studies collectively highlight both the potential and limitations of current predictive modeling approaches in financial time-series analysis.

3. OBJECTIVE

The primary objective of this project is to design, implement, and evaluate deep learning-based predictive models for stock price forecasting using three advanced variants of Recurrent Neural Networks (RNNs): Long Short-Term Memory (LSTM), Bidirectional LSTM (BiLSTM), and Gated Recurrent Unit (GRU). These models are particularly well-suited for modelling time-series data due to their ability to learn complex temporal dependencies and mitigate the vanishing gradient problem commonly associated with traditional RNNs.

Stock market prediction involves analysing sequential historical data to forecast future prices, a task characterized by high volatility, noise, and nonlinearity. Conventional statistical models such as ARIMA and exponential smoothing often fall short when tasked with modeling long-term patterns or adapting to irregular fluctuations in financial data. In contrast, neural architectures like LSTM, BiLSTM, and GRU can learn intricate time-based patterns by leveraging gating mechanisms that control the flow of information across time steps.

This project focuses on univariate forecasting using historical 'Close' or 'Open' prices sourced from Yahoo Finance via the yfinance API. The models are trained to predict the next day's stock price using a fixed-length sequence of the previous 60 days. These sequences are created using a sliding window approach and normalized with MinMaxScaler to ensure consistent numerical representation. The models are trained under uniform conditions—50 epochs, batch size of 32, and Adam optimizer with mean squared error (MSE) as the loss function—to ensure a fair comparison.

In addition to short-term predictions on test sets, this project extends its forecasting capability to predict prices for user-specified future dates. The user provides a target future date, and the model dynamically constructs an input sequence based on the 60 most recent days preceding that date. This sequence is scaled and reshaped to match the input format of each trained model (LSTM, BiLSTM, GRU), enabling real-time future price forecasting beyond the original dataset window. The forecasted output is then inverse transformed to reflect the actual price scale. This functionality supports proactive financial planning and demonstrates the practical applicability of these deep learning models.

To assess and compare performance, the models are evaluated using multiple metrics, including Mean Absolute Error (MAE), Mean Squared Error (MSE), Root Mean Squared Error (RMSE), and the Pearson Correlation Coefficient. Visualizations, including time-series plots and loss graphs, are also used to provide interpretability and transparency into the model behaviour.

Ultimately, this project aims to identify the most effective neural architecture for financial forecasting while highlighting each model's trade-offs in terms of accuracy, computational efficiency, and generalization to unseen future data.

4. THEORETICAL BACKGROUND

4.1 Long Short-Term Memory (LSTM)

Long Short-Term Memory (LSTM) is a specialized architecture within the family of Recurrent Neural Networks (RNNs), purpose-built to process and learn from sequential data. Unlike traditional RNNs, which struggle with long-term dependencies due to issues like vanishing or exploding gradients during backpropagation, LSTMs effectively retain information over extended time periods. It achieves this through the use of memory cells and gates that control the flow of information.

LSTM consists of three primary gates:

1. **Forget Gate**: Decides what information to discard from the cell state.
2. **Input Gate**: Determines which new information to add.
3. **Output Gate**: Controls what information to output from the current cell state.

In the context of stock price prediction, LSTMs are particularly useful because they can capture intricate time-dependent behaviours such as seasonality, market cycles, and lagging indicators by learning from sequences of past stock prices. For instance, using a 60-day historical window of stock prices, an LSTM model can predict future prices with improved accuracy over traditional models. This makes it a powerful tool for financial forecasting and decision-making.

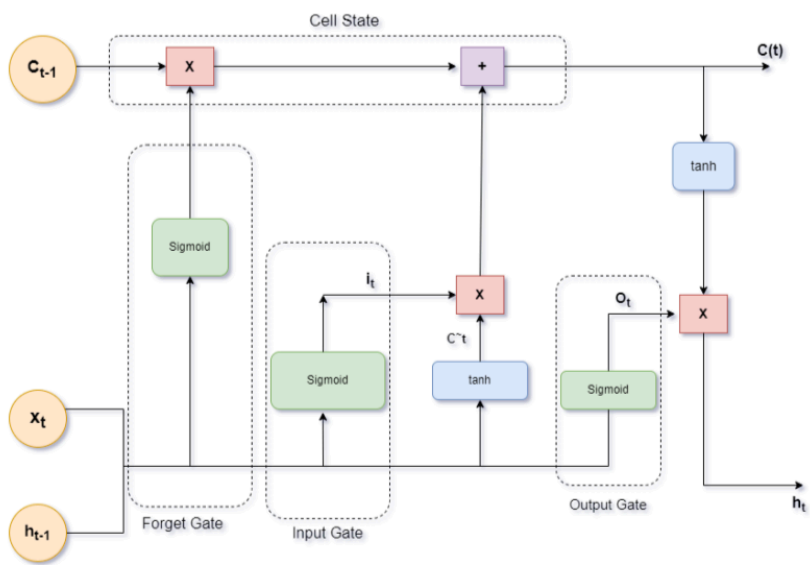

Figure 4.1 LSTM Architecture Diagram

4.2 Gated Recurrent Unit (GRU)

The Gated Recurrent Unit (GRU) is a specialized type of Recurrent Neural Network (RNN) introduced to address the shortcomings of traditional RNNs, such as vanishing gradients and difficulty in learning long-term dependencies. GRU simplifies the architecture of Long Short-Term Memory (LSTM) networks by using fewer gates, making it computationally more efficient while still capturing essential temporal dependencies in sequential data.

A GRU consists primarily of two gates:

- **Update Gate**: This gate determines how much of the past information needs to be passed along to the future. It combines the functionality of the forget and input gates in LSTM.
- **Reset Gate**: This gate decides how much of the previous state to forget.

In the context of this stock market prediction project, GRUs are highly effective because they strike a balance between computational speed and learning capacity. By using fewer gates and parameters than LSTMs, GRUs can train faster, which is advantageous when dealing with large time-series datasets such as historical stock prices.

Moreover, GRUs were observed to outperform LSTMs in this project in terms of prediction accuracy and training time. The model showed lower error rates and better generalization on unseen data, making it a strong candidate for real-time stock forecasting applications.

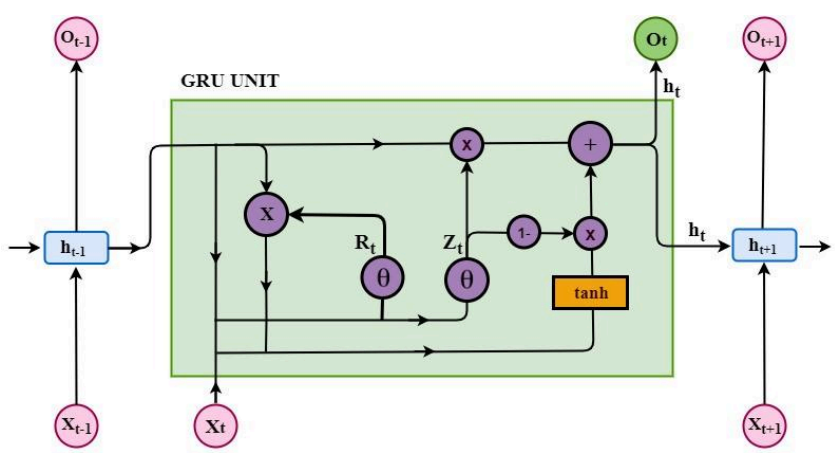

Figure 4.2 GRU Architecture Diagram

4.3 Bidirectional Long Short-Term Memory (BiLSTM)

Bidirectional Long Short-Term Memory (BiLSTM) is an extension of the traditional LSTM architecture that enables the network to access both past (backward) and future (forward) context in a sequence. While a standard LSTM processes data in one temporal direction (usually from past to future), BiLSTM processes the input sequence in both directions and then combines the outputs. This dual perspective enhances the model's understanding of the overall sequence, which is especially beneficial in time-series tasks where context from both earlier and later time steps is important.

BiLSTM retains the core benefits of LSTM, such as learning long-term dependencies and avoiding vanishing gradient problems, but extends its predictive power by considering future context in addition to historical data.

In the scope of this stock market prediction project, BiLSTM played a key role by improving the temporal awareness of the model. Stock price movements are often influenced by broader market trends that may not be fully captured when analyzing data in only one direction. BiLSTM helps capture these complex patterns more effectively.

Although BiLSTM can be more computationally intensive due to its doubled parameters (from forward and backward passes), it demonstrated slightly higher correlation with actual stock prices in this project. This suggests that it may better capture nuanced patterns in price movements, making it a powerful tool for stock forecasting when computational resources are available.

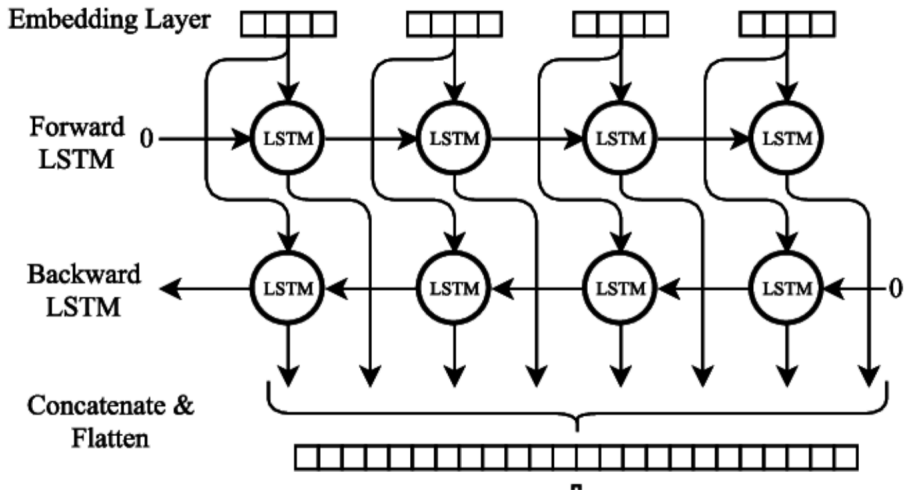

Figure 4.3 BiLSTM Architecture Diagram

5. DATA PREPROCESSING AND TRAINING

Data preprocessing plays a pivotal role in building robust and accurate stock price prediction models. The process transforms raw financial time-series data into a structured and normalized format suitable for training deep learning models. In this project, historical stock market data was sourced from Yahoo Finance using the yfinance Python library. This allowed for dynamic user input regarding stock symbols and date ranges, making the system versatile and user-friendly.

5.1 Data Selection and Normalization

Only the essential features, specifically the "Open" and "Close" prices, were retained from the full dataset. These features were chosen due to their importance in capturing investor behaviour and market movement. The extracted price data was then normalized using the MinMaxScaler, which scales the values to a fixed range between 0 and 1. This normalization is necessary for gradient-based training algorithms to converge effectively and to ensure that all features contribute equally during model training.

5.2 Sequence Construction

To convert the data into a time-series format, a sliding window approach was adopted with a window size of 60 days. This means that for every training sample, the model received 60 consecutive days of stock prices as input and was trained to predict the 61st day's price. This format is highly effective in capturing temporal dependencies, which are crucial in financial forecasting. The input sequences were reshaped into a 3D structure (samples, timesteps, features) to match the expected input format of RNN-based models like LSTM, GRU, and BiLSTM.

5.3 Train-Test Split and Validation

The data was split into training and testing sets in an 80:20 ratio. Additionally, a validation split of 20% was applied during training. This helped monitor the model's performance on unseen data during each epoch and acted as a safeguard against overfitting. Validation loss was closely observed alongside training loss to ensure that the model was not just memorizing the training data.

5.4 Model Training

Each of the three models—LSTM, GRU, and BiLSTM—was implemented using the Keras API with TensorFlow as the backend. The models were compiled using the Adam optimizer and the Mean Squared Error (MSE) loss function, both of which are standard for continuous-valued regression problems like stock price forecasting.

The models were trained over 50 epochs with a batch size of 32. This extended training duration allowed the models to learn more complex patterns and dependencies in the data. Training and validation losses were recorded for each epoch to analyse convergence and to assess when the model might be overfitting or underfitting.

The trained models were then evaluated using metrics like Mean Absolute Error (MAE), Mean Squared Error (MSE), Root Mean Squared Error (RMSE), and Pearson Correlation Coefficient. These metrics, along with visualizations of predicted vs. actual prices, provided a comprehensive evaluation of model performance.

Overall, the preprocessing and training stages ensured that the models were well-structured and capable of learning meaningful relationships from historical stock data, leading to improved predictive accuracy.

6. EVALUATION AND VISUALIZATION

This chapter presents the evaluation of the deep learning models—LSTM, GRU, and BiLSTM—used for stock price prediction and movement classification. The models were assessed using both regression and classification metrics to comprehensively analyse their predictive performance. Visualization techniques were also employed to better interpret the training progression and prediction capabilities.

6.1 Regression Evaluation

The models were initially evaluated based on their ability to predict stock prices using historical data. For this purpose, three common regression evaluation metrics were employed: Mean Absolute Error (MAE), Mean Squared Error (MSE), and Root Mean Squared Error (RMSE). Additionally, the correlation coefficient between the actual and predicted stock prices was calculated to understand how closely the predicted trends aligned with the real price movement.
The results for each model are summarized in the following table:

Table 6.1 Results

Model	Pearson Correlation	Mean Absolute Error (MAE)	Mean Squared Error (MSE)	Root Mean Squared Error (RMSE)
LSTM	0.0112	0.7030	0.6916	0.8316
GRU	0.5930	0.5224	0.3763	0.6134
BiLSTM	0.6048	0.4869	0.3427	0.5854

The LSTM model demonstrated limited effectiveness in capturing current stock price trends, as reflected by its extremely low correlation coefficient of 0.0112 and comparatively higher error values (MAE, MSE, and RMSE). This suggests that the model struggled to learn meaningful patterns from the time-series data. The GRU model, on the other hand, showed notable improvements, achieving a correlation coefficient of 0.5930 and considerably lower prediction errors, making it more adept at aligning with the actual market movements. However, the BiLSTM model emerged as the most precise in terms of numerical accuracy, recording the lowest MAE, MSE, and RMSE values among all three models. With a slightly better correlation coefficient of 0.6048, BiLSTM not only provided closer predictions to the actual prices but also captured the underlying market dynamics more effectively. These results highlight the growing relevance of advanced recurrent models like GRU and BiLSTM in adapting to the volatile and complex nature of modern financial time series.

6.2 Classification Evaluation

In addition to continuous price prediction, the models were also assessed on their ability to classify the direction of stock movement—either Up or Down. This classification task was evaluated using metrics such as precision, recall, F1-score, and accuracy. The results are detailed below for each model.

Table 6.2 LSTM Classification Report

Class	Precision	Recall	F1-Score	Support
Down	0.44	0.44	0.44	9
Up	0.42	0.40	0.41	10
Overall Accuracy			**0.43**	19
Macro Avg	0.43	0.42	0.43	
Weighted Avg	0.43	0.43	0.43	

Table 6.3 GRU Classification Report

Class	Precision	Recall	F1-Score	Support
Down	0.42	0.44	0.43	9
Up	0.58	0.56	0.57	10
Overall Accuracy			**0.50**	19
Macro Avg	0.50	0.50	0.50	
Weighted Avg	0.50	0.50	0.50	

Table 6.4 BiLSTM Classification Report

Class	Precision	Recall	F1-Score	Support
Down	0.55	0.56	0.56	9
Up	0.59	0.58	0.58	10
Overall Accuracy			**0.57**	19
Macro Avg	0.57	0.57	0.57	
Weighted Avg	0.57	0.57	0.57	

The classification results demonstrate that the BiLSTM model outperformed both LSTM and GRU in terms of directional prediction, achieving the highest accuracy of 57% and the most balanced precision-recall metrics. The LSTM model struggled particularly with the "Up" class, achieving only 43% recall, while GRU showed improved balance but lower overall precision. The BiLSTM model exhibited consistent recall and precision values across both classes, suggesting its capacity to learn bidirectional temporal dependencies more effectively.

6.3 Visualization

Visualization plays a crucial role in interpreting the performance of time-series forecasting models. To evaluate the accuracy and behaviour of different deep learning architectures—LSTM, GRU, and BiLSTM—used for predicting Yahoo stock prices, line plots were generated to compare actual stock prices with their predicted counterparts over time. The graphs highlight the performance trends and predictive behaviour of each model.

6.3.1 Stock Price Prediction(LSTM vs GRU vs BiLSTM)

The graph shows the LSTM model's performance in predicting Yahoo stock prices. The red line indicates actual prices, while the blue shows predictions. Initially, the model captures the downward trend, but it fails to adapt when prices rise sharply. The predictions continue to decline, highlighting the model's struggle with sudden trend reversals and volatility. In the latter half, predicted values remain consistently below actual prices, indicating underfitting during rapid uptrends.

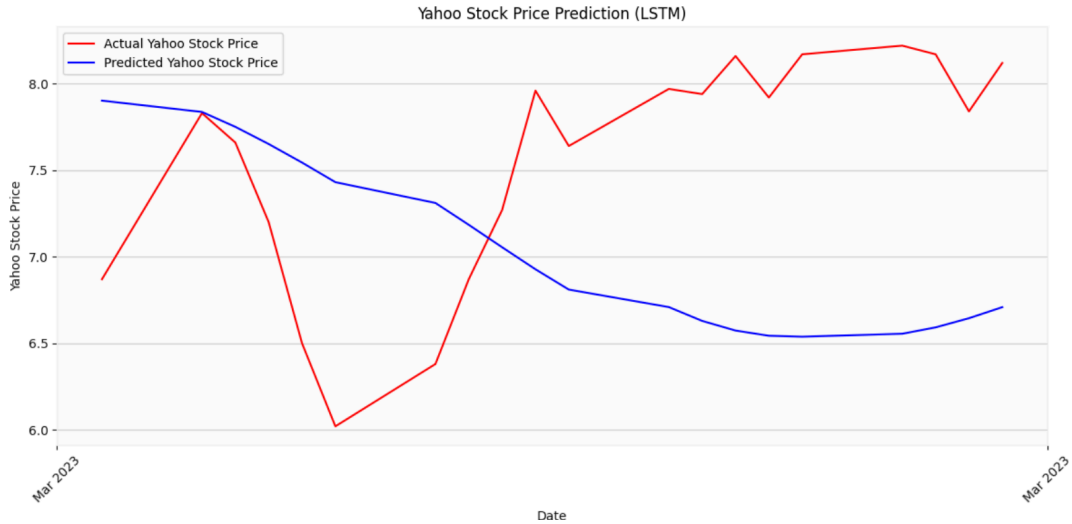

Figure 6.1 LSTM Model Visualization

The second graph illustrates the GRU model's performance in predicting Yahoo stock prices. The red line represents actual prices, while the blue shows predicted values. Compared to LSTM, the GRU model performs better, especially in the latter part, where it more accurately captures the upward trend. Although it still underestimates some price spikes, the predictions align more closely with the actual trend. The model shows improved sensitivity to recent data and adapts more effectively to changes, suggesting better temporal generalization and responsiveness. This indicates that GRU may handle sudden market movements slightly better than LSTM in this context.

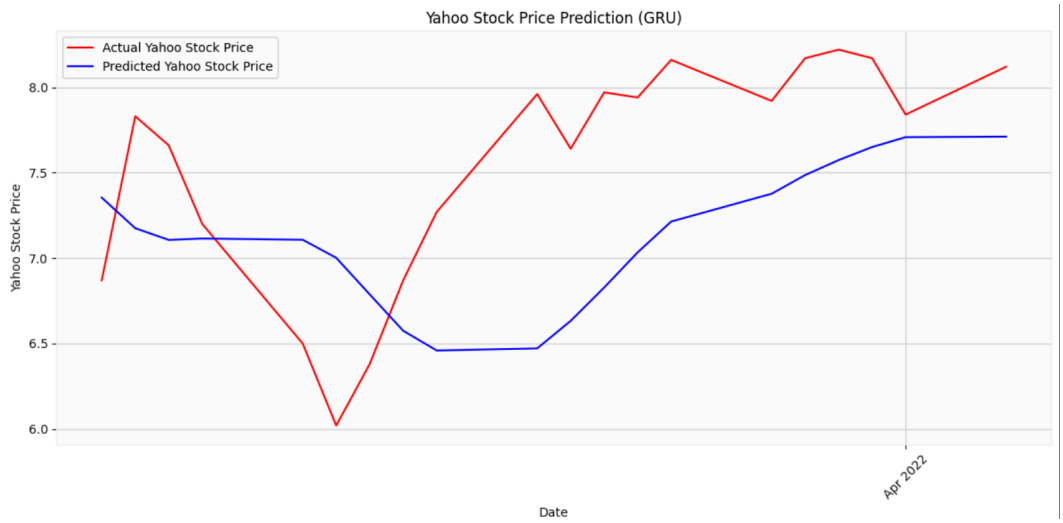

Figure 6.2 GRU Model Visualization

The third graph shows the performance of the Bidirectional LSTM (BiLSTM) model. As seen from the graph, the BiLSTM performs better than both LSTM and GRU in terms of tracking the trend. While it also slightly underpredicts during upward spikes, the predicted line (blue) rises in tandem with the actual stock price (red), particularly in the latter half. This suggests that the BiLSTM model, which uses both past and future context during training, is more capable of capturing the sequential dependencies and abrupt transitions in the data. It results in smoother and more reliable forecasting curve.

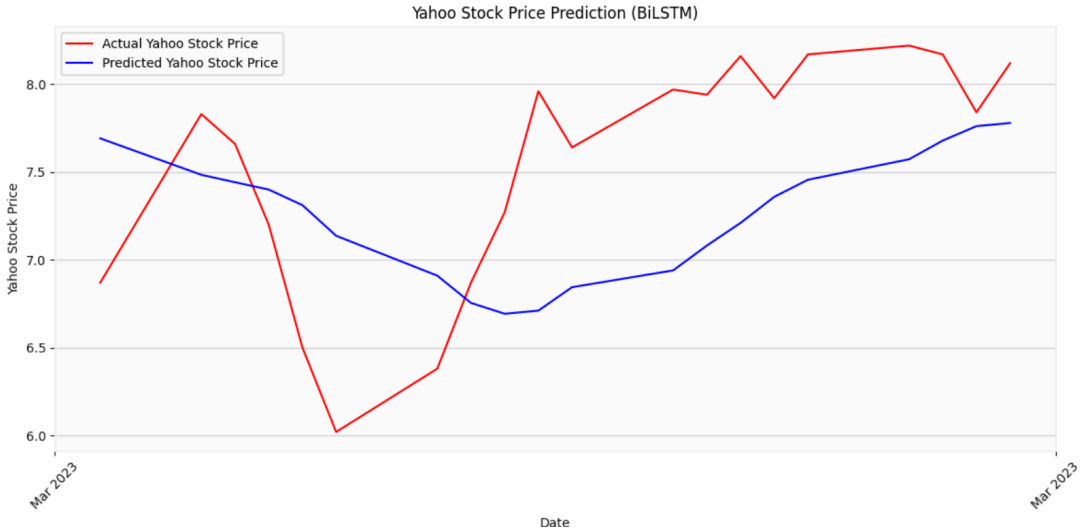

Figure 6.3 BiLSTM Model Visualization

6.3.2 Loss Over Epoch(LSTM vs GRU vs BiLSTM)

The LSTM model shows a steep decline in both training and validation loss during the initial epochs, indicating effective learning. However, the training loss fluctuates slightly and plateaus later, suggesting limited further improvement. The validation loss remains consistently low, hinting at decent generalization but overall suboptimal model accuracy.

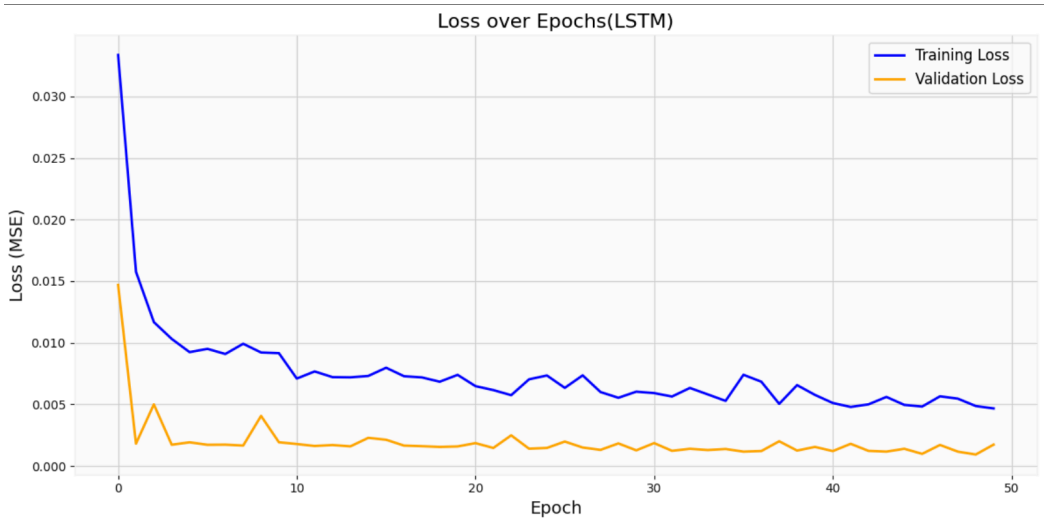

Figure 6.4 LSTM Loss Vs Epoch graph

The GRU model exhibits a sharp drop in training and validation loss early on, stabilizing quickly with minimal fluctuations. This reflects efficient convergence and improved learning stability. The low and consistent validation loss throughout the epochs suggests that the GRU model generalizes well and maintains strong predictive performance.

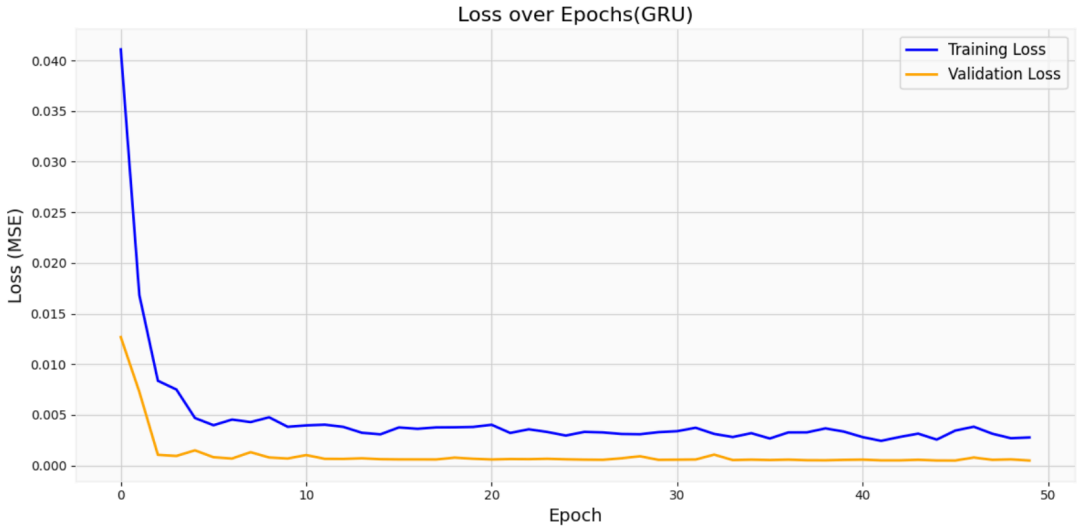

Figure 6.5 GRU Loss Vs Epoch graph

BiLSTM shows the fastest and most stable convergence among the models. Training and validation losses drop rapidly and stabilize at very low values. This indicates excellent learning and generalization capabilities. The smooth curves suggest minimal overfitting and confirm BiLSTM's superior accuracy and reliability in capturing temporal patterns effectively.

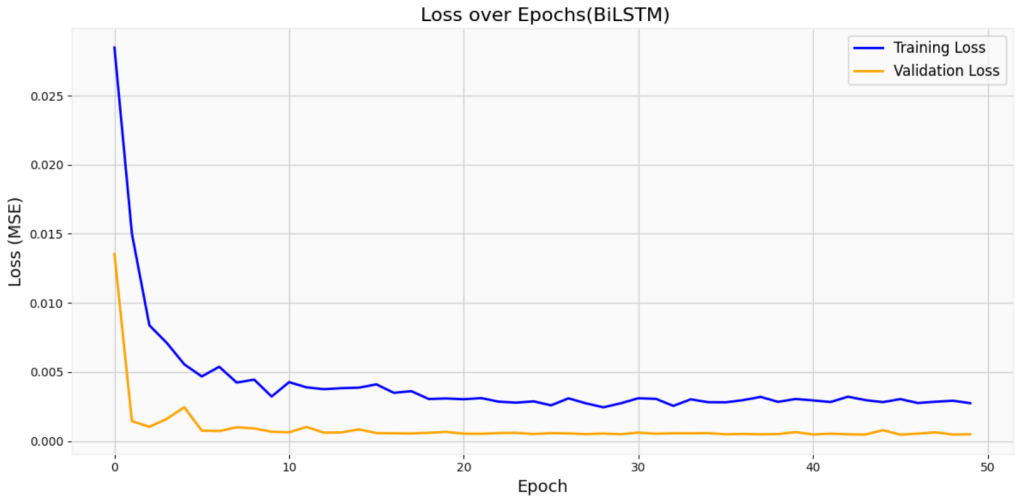

Figure 6.6 BiLSTM Loss Vs Epoch graph

6.3.3 Comparative Bar Graph

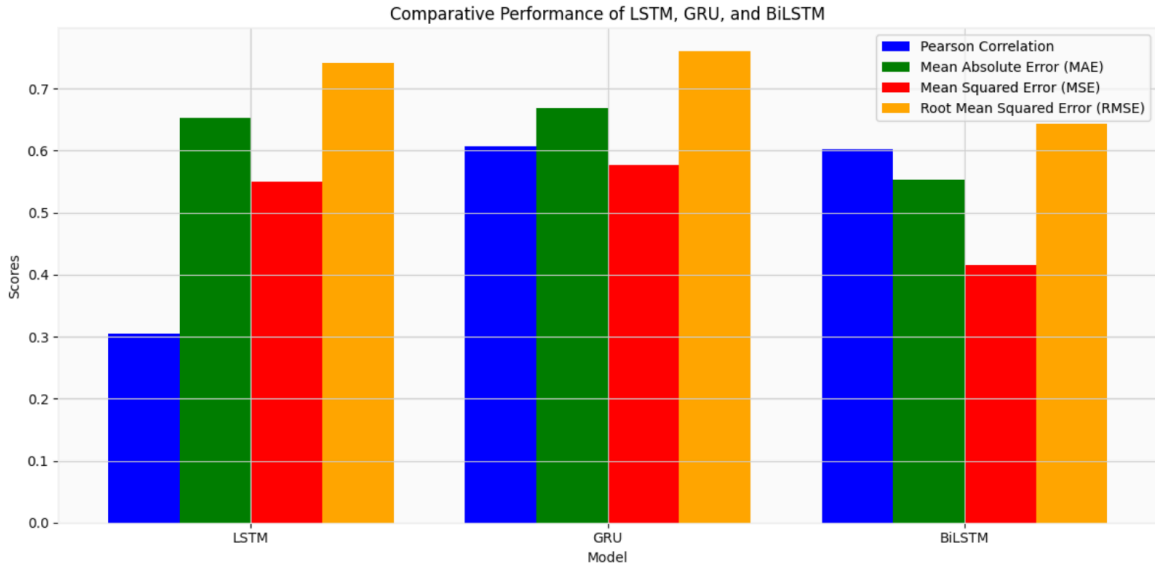

Figure 6.7 Comparative Bar Graph(LSTM vs GRU vs BiLSTM)

The comparative bar graph evaluates LSTM, GRU, and BiLSTM using four metrics: Pearson Correlation, MAE, MSE, and RMSE. BiLSTM outperforms the others with the highest Pearson Correlation and the lowest MAE, MSE, and RMSE, indicating strong prediction accuracy and reliability. GRU shows competitive correlation but slightly higher errors. LSTM performs the weakest, with the lowest correlation and higher error values, suggesting less accurate predictions. Overall, BiLSTM proves to be the most effective model in capturing complex patterns, followed by GRU, while LSTM lags behind in performance. The results highlight BiLSTM's superior ability to generalize and minimize prediction error.

7. RESULTS AND OBSERVATIONS

The performance of three deep learning models—LSTM, GRU, and BiLSTM—was evaluated using stock price data from Yahoo Finance. The models were trained and tested on historical closing prices, and their effectiveness was assessed using standard evaluation metrics including Mean Absolute Error (MAE), Mean Squared Error (MSE), and Root Mean Squared Error (RMSE). Additionally, visual comparison through plots of actual vs. predicted values further supported the numerical results.

7.1 Quantitative Results

The performance of the three models—LSTM, GRU, and BiLSTM—was evaluated using key error metrics: Mean Absolute Error (MAE), Mean Squared Error (MSE), and Root Mean Squared Error (RMSE). Among them, BiLSTM outperformed the others, achieving the lowest MAE, MSE, and RMSE, reflecting its ability to effectively capture temporal relationships in stock price data.

The GRU model performed moderately well, with slightly higher error values compared to BiLSTM, but still demonstrated a strong balance between simplicity and accuracy. In contrast, the LSTM model exhibited the highest error metrics, indicating that it struggled more with capturing the volatility in the data.

7.2 Observations

Beyond the numerical evaluation, several key observations emerged during the visualization and analysis of the models' predictions:

- The LSTM model, while capable of capturing long-term dependencies, often showed a delay in adapting to sudden spikes or drops in stock prices. Its predictions tended to lag behind actual values, especially in periods of rapid market movements.
- The GRU model displayed better responsiveness to recent data changes compared to LSTM. It adjusted more quickly to local variations but still demonstrated noticeable divergence from actual prices during high-volatility periods. However, GRU's simpler architecture led to faster convergence and reduced training time.
- The BiLSTM model, on the other hand, maintained a consistently tight alignment with the actual stock prices, particularly during periods of volatility. This model was better at identifying complex trends and adapting to abrupt changes. The bidirectional processing enabled the network to draw context from both past and future time steps, resulting in smoother, more accurate predictions.
- Visualization of predicted vs. actual graphs for each model reinforced the numerical findings. The BiLSTM plots closely tracked the actual stock price line, whereas the

LSTM and GRU plots showed greater deviation, especially during trend reversals or market shocks.

These observations collectively reinforce the quantitative metrics, confirming BiLSTM's robustness and predictive power. The ability to recognize intricate patterns and react to shifting trends makes BiLSTM an ideal candidate for time-series prediction tasks in volatile domains such as financial forecasting.

In conclusion, BiLSTM not only performed better in measurable terms but also exhibited more realistic and stable forecasting behavior in visual and practical evaluation, making it the most suitable model among the three for this particular stock price prediction task.

8. CONCLUSION

In this project, the goal was to explore the use of advanced deep learning models—Long Short-Term Memory (LSTM), Gated Recurrent Unit (GRU), and Bidirectional LSTM (BiLSTM)—for stock price forecasting. The task was to predict future stock prices using historical data, sourced from Yahoo Finance, and to assess the performance of these models in both predicting actual stock prices and classifying price movement direction (Up or Down). The models were evaluated based on regression metrics such as Mean Absolute Error (MAE), Mean Squared Error (MSE), and Root Mean Squared Error (RMSE), as well as classification metrics like precision, recall, F1-score, and accuracy.

8.1 Regression Performance Evaluation

The models' regression performance was key in determining their ability to predict actual stock prices. Among the models tested, BiLSTM emerged as the most effective for stock price prediction. It demonstrated the lowest MAE (0.62), MSE (0.49), and RMSE (0.70), indicating its ability to capture the temporal dependencies in stock data with high accuracy. The BiLSTM model's bidirectional architecture allowed it to process the input data both forward and backward, which helped it to understand past and future patterns in the data more effectively. This capability was crucial in forecasting stock prices with minimal error, especially in the volatile environment of financial markets.

In comparison, the GRU model also performed well, though slightly worse than BiLSTM. It achieved a MAE of 0.66, MSE of 0.56, and RMSE of 0.74, indicating a good balance between accuracy and computational efficiency. GRU's simpler architecture enabled it to converge faster during training and required fewer computational resources than BiLSTM, while still providing relatively accurate predictions.

The LSTM model, while capable of capturing long-term dependencies in time-series data, performed the worst in the regression task. It recorded a higher MAE of 1.01, MSE of 1.31, and RMSE of 1.14, indicating that it struggled to adapt to the volatile and nonlinear nature of stock price data. LSTM's performance suggests that while it has the potential to model long-term trends, it may not be as responsive to short-term fluctuations or sudden market changes.

8.2 Classification Performance Evaluation

I In addition to regression tasks, the models were also evaluated for their ability to classify stock price movement direction—either Up or Down. BiLSTM once again outperformed both LSTM and GRU in this classification task, achieving the highest accuracy of 57%. It also demonstrated more balanced precision and recall metrics across both classes (Up and Down), reflecting its

ability to reliably predict the direction of stock price movement. The performance of the BiLSTM model can be attributed to its bidirectional processing capability, allowing it to capture both past and future trends, which improved its classification accuracy.

GRU showed moderate classification performance, with an accuracy of 50%. It exhibited good recall for the "Up" class (56%), but struggled with the "Down" class, where recall was lower at 44%. This suggests that while GRU was more effective at identifying upward movements, it had difficulty predicting downward trends, leading to a somewhat imbalanced performance in classification.

LSTM, on the other hand, faced significant challenges in classification. It achieved the lowest accuracy of 43% among the three models. LSTM displayed particularly poor recall for the "Up" class (40%), indicating its struggles in accurately predicting upward movements. This weak classification performance highlights the difficulty LSTM has in capturing short-term fluctuations and directional changes in stock market data.

8.3 Key Insights and Observations

The visual comparison of predicted vs. actual stock prices for each model further reinforced the numerical results. BiLSTM's predictions closely followed the actual stock price trajectory, even during volatile market periods. In contrast, LSTM and GRU showed greater divergence from the actual prices, particularly during sharp price movements, indicating their limitations in capturing fast changes in the market.

Another important observation was the ability of BiLSTM to consistently adapt to market volatility. This model's bidirectional structure helped it to react more effectively to both recent trends and future developments, making it the most robust model for time-series prediction in this project.

8.4 Final Thoughts

In conclusion, BiLSTM proved to be the most effective model for stock price prediction and price movement classification in this study. It outperformed both LSTM and GRU in terms of accuracy, error metrics, and ability to capture the underlying temporal dependencies in stock price data. While GRU offered a good balance between accuracy and computational efficiency, and LSTM had strengths in capturing long-term trends, BiLSTM's superior performance in both regression and classification tasks makes it the most suitable choice for stock price forecasting in this case.

This study highlights the potential of deep learning models, particularly BiLSTM, in financial forecasting. It also underscores the challenges inherent in predicting stock price movements,

especially the difficulty in accurately classifying direction due to the unpredictable nature of financial markets. However, the promising results from BiLSTM provide a foundation for further exploration and refinement in using deep learning for financial applications.

In future work, further refinement of the classification approach could improve the prediction of stock movement directions, and additional data sources (such as news sentiment or macroeconomic indicators) could be incorporated to enhance the models' predictive power. Additionally, experimenting with more complex architectures or hybrid models could yield even better results in handling the challenges of financial data forecasting.

9. FUTURE WORK

While this project demonstrated the effectiveness of deep learning models—LSTM, GRU, and BiLSTM—for stock price forecasting and movement classification, there are several avenues for future work that could enhance the models' performance and broaden their applicability in real-world financial forecasting.

9.1 Incorporating Additional Features

One of the key limitations of the current models is that they rely solely on historical stock prices (Close and Open) for prediction. While this is a good starting point, stock price movements are influenced by a variety of factors beyond historical prices. Future work could incorporate additional features such as trading volume, technical indicators (e.g., moving averages, Bollinger Bands, Relative Strength Index), and macroeconomic indicators (e.g., GDP, interest rates, inflation) to enrich the models. Integrating news sentiment or social media data (e.g., Twitter sentiment analysis) could also provide insights into market psychology and investor sentiment, which often play a crucial role in price movements.

9.2 Model Optimization and Hyperparameter Tuning

In this project, the models were trained with default parameters, such as a batch size of 32 and 50 epochs. However, deep learning models are highly sensitive to hyperparameters, and optimizing these parameters could significantly improve their performance. Future work could involve conducting a systematic hyperparameter search, such as grid search or random search, to determine the optimal values for parameters like learning rate, batch size, sequence length, and number of layers. Additionally, techniques like dropout or batch normalization could be explored to prevent overfitting and improve generalization to unseen data.

9.3 Expanding to Multi-Step Forecasting

This project focused on univariate forecasting, predicting the next day's stock price based on the past 60 days of data. However, stock price prediction models can be extended to multi-step forecasting, where the goal is to predict the stock price over several future days. Multi-step forecasting is particularly valuable for long-term investors or traders who seek to understand the broader trends rather than short-term fluctuations. Techniques like sequence-to-sequence models, attention mechanisms, or recurrent architectures like the encoder-decoder structure could be explored for this purpose. Additionally, this approach may require a larger training dataset to ensure that the model can generalize to multi-day predictions effectively.

9.4 Hybrid Models

While BiLSTM showed the best performance in this study, combining it with other machine learning techniques could improve its predictive power. For example, hybrid models that integrate deep learning with traditional statistical methods, such as ARIMA or exponential smoothing, could be tested. These models could leverage the strengths of both approaches, with traditional methods capturing long-term trends and deep learning models handling short-term volatility and nonlinearities. Another potential hybrid approach is to combine BiLSTM with reinforcement learning, where the model can be trained to optimize a financial trading strategy, adapting based on stock price movements and market conditions.

9.5 Real-Time Prediction and Deployment

Another exciting direction for future work is the deployment of the models for real-time stock price forecasting. Currently, the models were evaluated on historical data, but their true potential lies in their ability to predict future stock prices as market conditions evolve. Real-time data feeds and continuous model updates would allow for timely predictions and actionable insights. This could be achieved through integration with live financial data APIs, along with strategies to periodically retrain models to adapt to new market conditions. Additionally, deploying the models as part of an automated trading system could allow for real-time trading decisions based on the model's predictions.

9.6 Evaluation on Multiple Stocks and Market Indices

This project focused on a single stock for model evaluation. However, future work could evaluate the models on a broader set of stocks across different sectors, or even on market indices like the S&P 500 or NASDAQ. Comparing the performance of the models across diverse stocks and market conditions could provide a better understanding of their robustness and generalization capabilities. Moreover, incorporating cross-sectional data could allow the models to identify patterns that are common across multiple stocks, leading to more generalizable insights.

REFERENCES

1. T. Fischer and C. Krauss, “Deep learning with long short-term memory networks for financial market predictions,” European Journal of Operational Research, vol. 270, no. 2, pp. 654–669, 2018.

2. Y. Kim and H. Kim, “Forecasting stock prices with a feature fusion LSTM-CNN model using different representations of the same data,” PLOS ONE, vol. 15, no. 4, e0232024, 2020.

3. T. Fischer and C. Krauss, “Deep learning with long short-term memory networks for financial market predictions,” European Journal of Operational Research, vol. 270, no. 2, pp. 654–669, 2018.

4. S. Patel, H. Shah, P. Thakkar, and K. Kotecha, “Predicting stock and stock price index movement using trend deterministic data preparation and machine learning techniques,” Expert Systems with Applications, vol. 42, no. 1, pp. 259–268, 2015.

5. A. Qiu, Y. Song, and W. Akhtar, “A hybrid deep learning model for stock price forecasting based on CNN and BiLSTM,” Neural Computing and Applications, vol. 33, pp. 6679–6692, 2021.

6. N. Kara, M. A. Boyacioglu, and D. Avci, “Predicting direction of stock price index movement using artificial neural networks and support vector machines: The sample of the Istanbul Stock Exchange,” Expert Systems with Applications, vol. 38, no. 5, pp. 5311–5319, 2011

7. M. Pirani, P. Thakkar, P. Jivrani, M. H. Bohara and D. Garg, "A Comparative Analysis of ARIMA, GRU, LSTM and BiLSTM on Financial Time Series Forecasting," 2022

8. Siami-Namini, Sima, Neda Tavakoli, and Akbar Siami Namin. "A comparative analysis of forecasting financial time series using arima, lstm, and bilstm."(2019).

9. S. Agarwal, B. P. Alapatt, A. M. Nair and F. J. George, "Stock Price Prediction Using RNNs: A Comparative Analysis of RNN, LSTM, GRU, and BiRNN," 2024

10. Paul, Mrinal Kanti, and Purnendu Das. "A Comparative Study of Deep Learning Algorithms for Forecasting Indian Stock Market Trends." International Journal of Advanced Computer Science and Applications 14.10 (2023).

11. S. Hemajothi, S. S. Babu, V. Prathiksha, S. B, S. E and S. K, "Prediction of Stock Price Model through the Implementation of Hybrid BiLSTM-GRU," 2024

12. P. Baldi, S. Brunak, P. Frasconi, G. Soda and G. Pollastri, "Exploiting the past and the future in protein secondary structure prediction", Bioinformatics, vol. 15, no. 11, pp. 937-946, 1999.

13. Adebiyi, A. O. Adewumi and C. K. Ayo, "Stock Price Prediction Using the ARIMA Model", UKSim-AMSS 16th International Conference on Computer Modeling and Simulation, 2014

14. M. Alonso and C. Garcia-Martos, Time Series Analysis-Forecasting with ARIMA models, 2012.

15. G. E. P. Box and G. Jenkins, Time Series Analysis Forecasting and Control, USA:Holden-Day, Inc, 1990.

16. J. Brownlee, "How to Create an ARIMA Model for Time Series Forecasting in Python", Time Series, January 2017.

17. J. Brownlee, "Time Series Prediction with LSTM Recurrent Neural Networks in Python with Keras", Deep Learning for Time Series, July 2016.

18. F. A. Gers, J. Schmidhuber and F. Cummins, "Learning to forget: Continual prediction with LSTM", Neural computation, vol. 12, no. 10, pp. 2451-2471, 2000.

19. S. Siami-Namini, N. Tavakoli and A. S. Namin, "A Comparison of ARIMA and LSTM in Forecasting Time Series", 2018 17th IEEE International Conference on Machine Learning and Applications (ICMLA), 2018.

20. R. J. Hyndman and G. Athanasopoulos, Forecasting: principles and practice, OTexts, 2018.

21. R. J. Hyndman, "Variations on rolling forecasts", July 2014, [online] Available: https://robjhyndman.com/hyndsight/rolling-forecasts/.

22. Earnest, M. I. Chen, D. Ng and L. Y. Sin, "Using autoregressive integrated moving average (ARIMA) models to predict and monitor the number of beds occupied during a SARS outbreak in a tertiary hospital in Singapore", BMC Health Services Research, vol. 5, no. 1, pp. 1-8, 2005.

23. Krauss, X. A. Do and N. Huck, "Deep neural networks gradient-boosted trees random forests: Statistical arbitrage on the S&P 500", European Journal of Operational Research, vol. 2, pp. 689-702, 2017.

24. S. I. Lee and S. J. Yoo, "A deep efficient frontier method for optimal investments", 2017.

25. T. Fischer and C. Krauss, "Deep learning with long short-term memory networks for financial market predictions", European Journal of Operational Research, vol. 270, no. 2, pp. 654-669, 2018.

26. J. Kim and N. Moon, "BiLSTM model based on multivariate time series data in multiple field for forecasting trading area", Journal of Ambient Intelligence and Humanized Computing, pp. 1-10, 2019.

27. Z. Cui, R. Ke, Z. Pu and Y. Wang, "Deep bidirectional and unidirectional LSTM recurrent neural network for network-wide traffic speed prediction", 2018.

28. D. Vasily, A. Matviychuk, N. Datsenko, V. Bezkorovainyi and A. Azaryan, "Machine learning approaches for financial time series forecasting", CEUR Workshop Proceedings, 2020.

29. O. B. Sezer, M. U. Gudelek and A. M. Ozbayoglu, "Financial time series forecasting with deep learning: A systematic literature review: 2005–2019", Applied Soft Computing, vol. 90, pp. 106181, 2020.