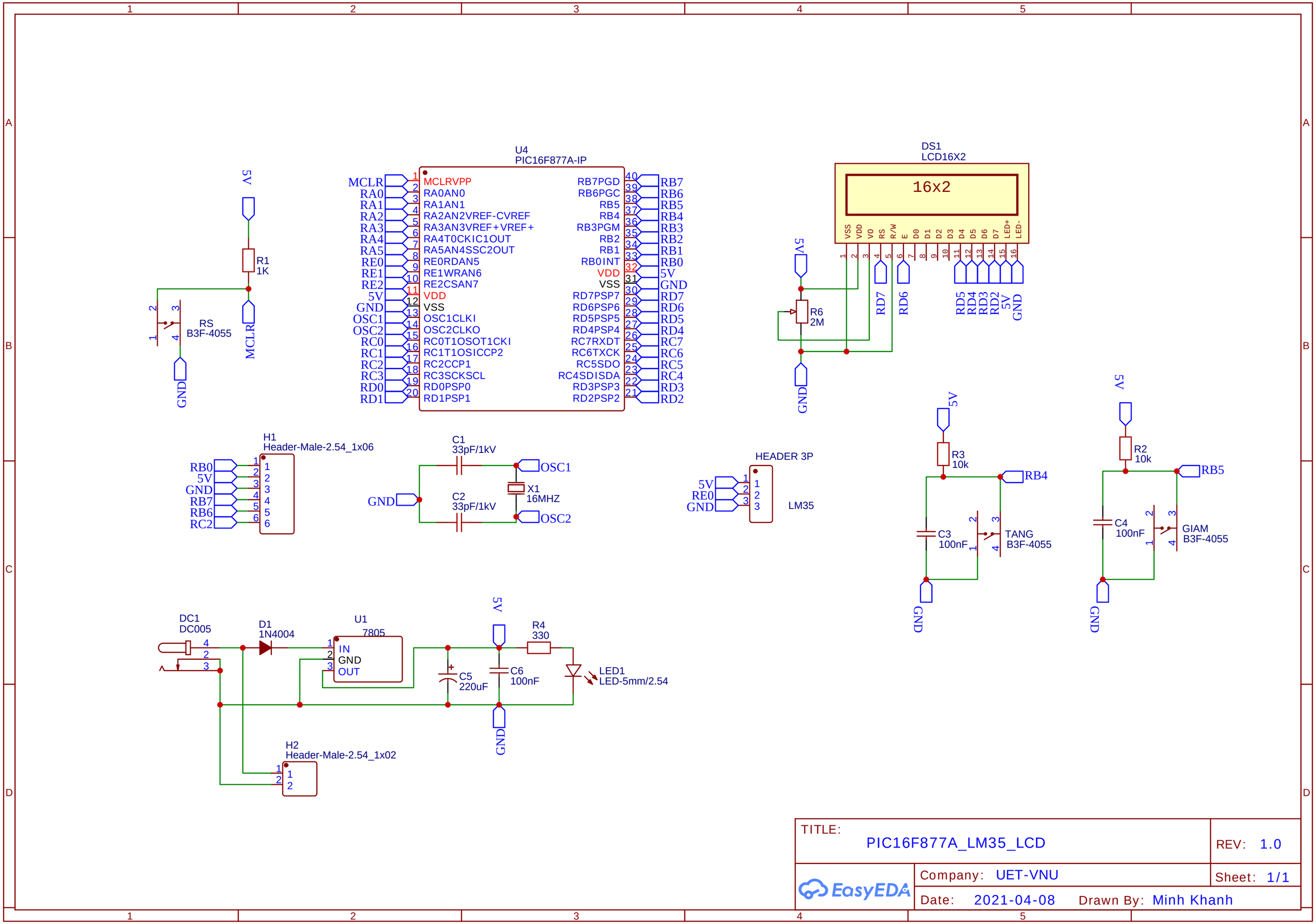

TITLE: PIC16F877A_LM35_LCD		REV: 1.0
EasyEDA	Company: UET-VNU	Sheet: 1/1
	Date: 2021-04-08 Drawn By: Minh Khanh	