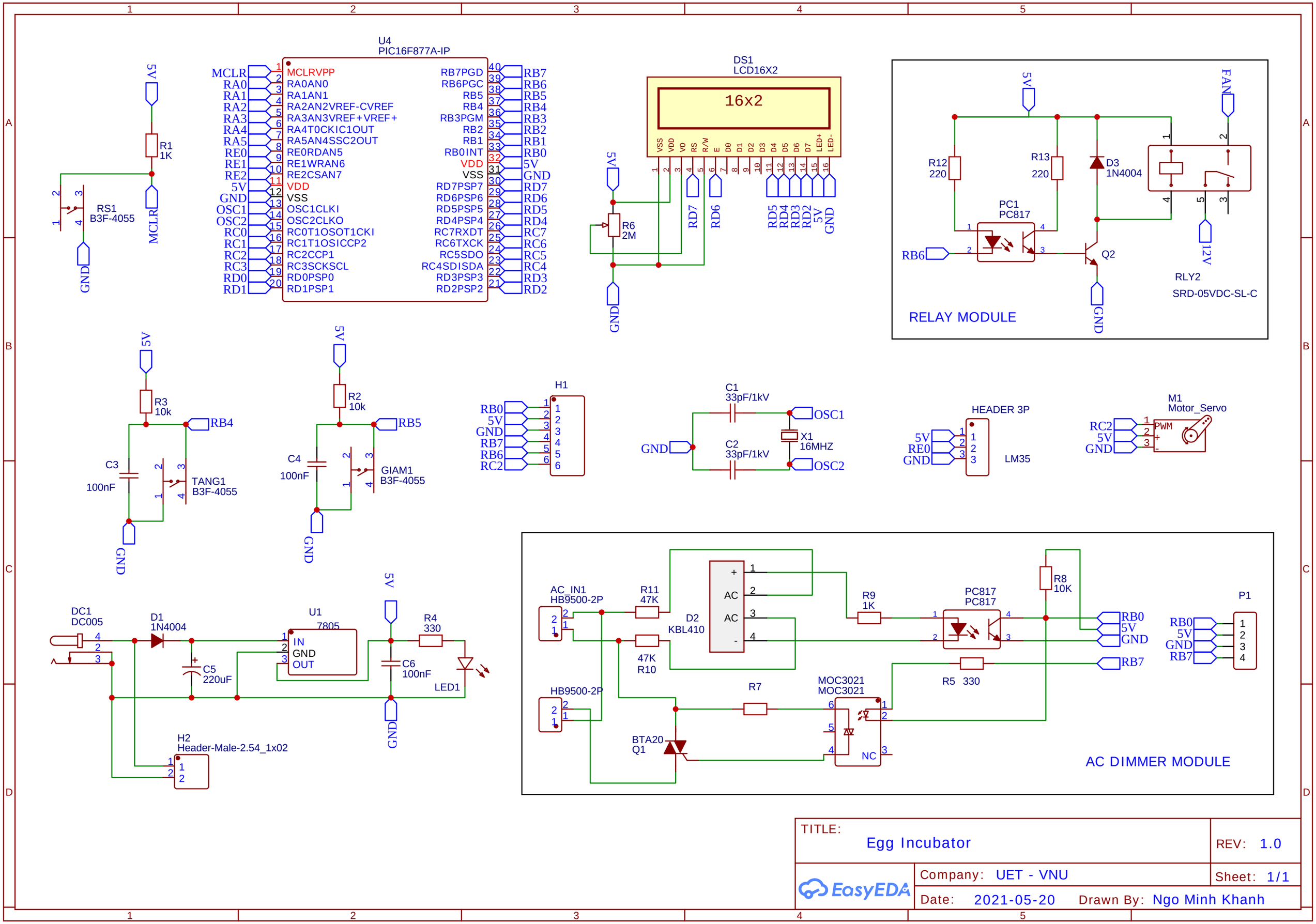

TITLE: Egg Incubator		REV: 1.0
EasyEDA	Company: UET - VNU	Sheet: 1/1
	Date: 2021-05-20 Drawn By: Ngo Minh Khanh	