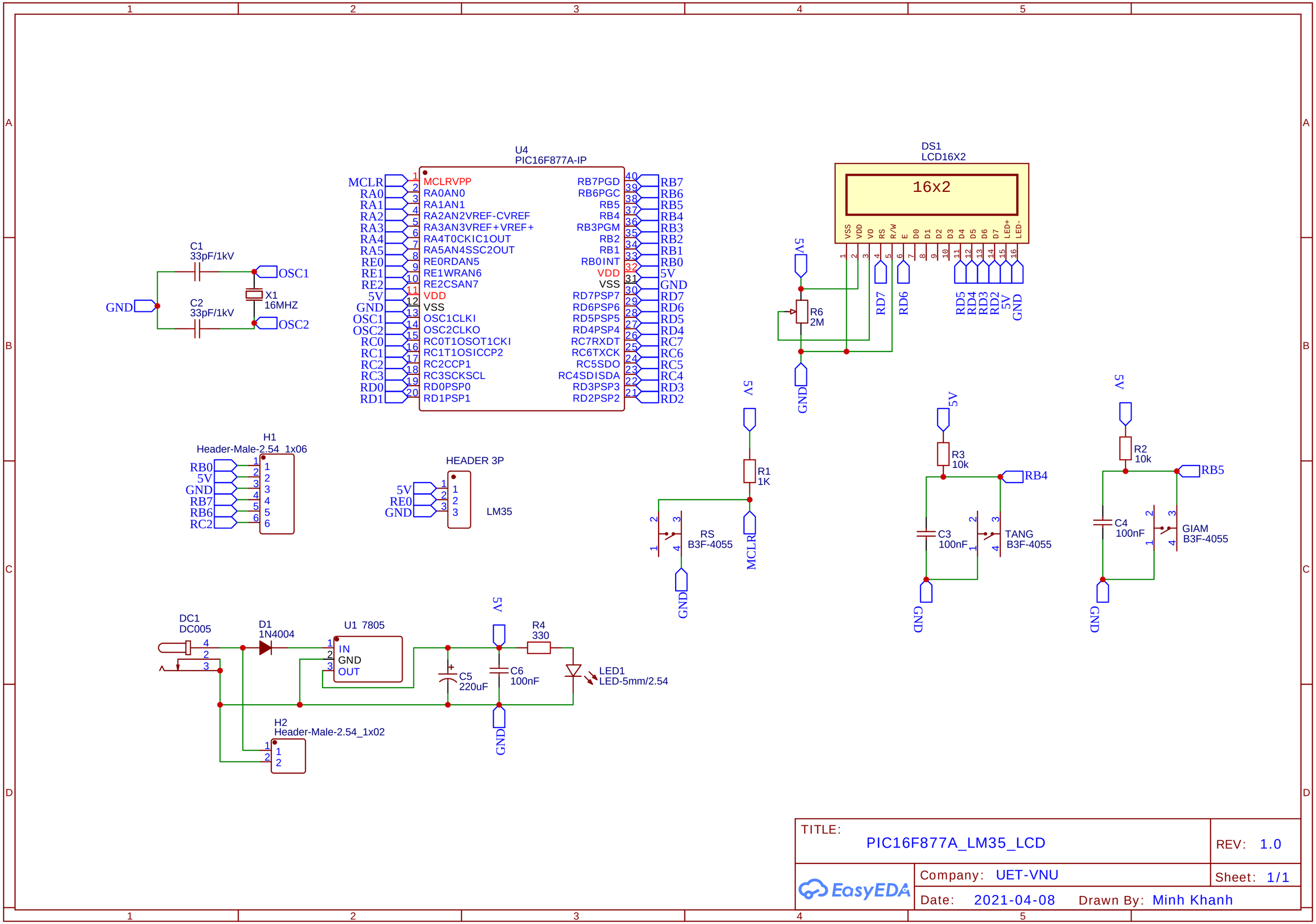


| | | |
|---|---|---|
| TITLE: PIC16F877A_LM35_LCD | | REV: 1.0 |
| EasyEDA | Company: UET-VNU | Sheet: 1/1 |
| | Date: 2021-04-08 Drawn By: Minh Khanh | |