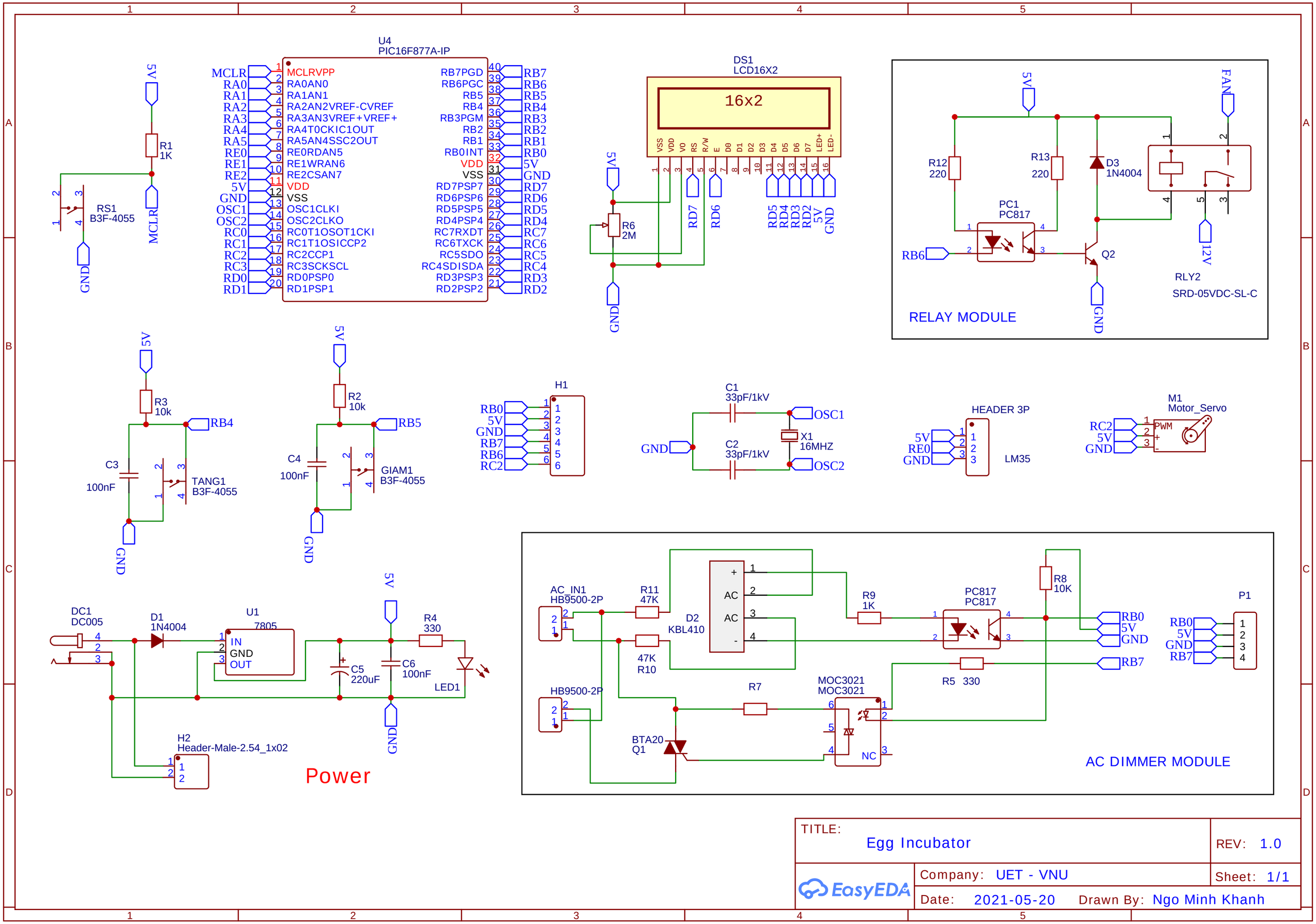
U4
PIC16F877A-IP
MCLR
RA0
RA1
RA2
RA3
RA4
RA5
RE0
RE1
RE2
5V
GND
OSC1
OSC2
RC0
RC1
RC2
RC3
RD0
RD1
MCLRVPP
RA0AN0
RA1AN1
RA2AN2VREF-CVREF
RA3AN3VREF+VREF+
RA4T0CKIC1OUT
RA5AN4SSC2OUT
RE0RDAN5
RE1WRAN6
RE2CSAN7
VDD
VSS
OSC1CLKI
OSC2CLKO
RC0T1OSOT1CKI
RC1T1OSICCP2
RC2CCP1
RC3SCKSCL
RD0PSP0
RD1PSP1
RB7PGD
RB6PGC
RB5
RB4
RB3PGM
RB2
RB1
RB0INT
VDD
VSS
RD7PSP7
RD6PSP6
RD5PSP5
RD4PSP4
RC7RXDT
RC6TXCK
RC5SDO
RC4SDISDA
RD3PSP3
RD2PSP2
RB7
RB6
RB5
RB4
RB3
RB2
RB1
RB0
5V
GND
RD7
RD6
RD5
RD4
RC7
RC6
RC5
RC4
RD3
RD2
R1
1K
RS1
B3F-4055
DS1
LCD16X2
16x2
VSS
VDD
VO
RS
R/W
E
D0
D1
D2
D3
D4
D5
D6
D7
LED+
LED-
R6
2M
RD7
RD6
RD5
RD4
RD3
RD2
5V
GND
RELAY MODULE
FAN
12V
R12
220
R13
220
D3
1N4004
PC1
PC817
RB6
Q2
RLY2
SRD-05VDC-SL-C
R3
10k
RB4
C3
100nF
TANG1
B3F-4055
R2
10k
RB5
C4
100nF
GIAM1
B3F-4055
H1
RB0
5V
GND
RB7
RB6
RC2
C1
33pF/1kV
C2
33pF/1kV
OSC1
OSC2
X1
16MHZ
HEADER 3P
5V
RE0
GND
LM35
M1
Motor_Servo
RC2
5V
GND
PWM
DC1
DC005
D1
1N4004
U1
7805
IN
GND
OUT
C5
220uF
C6
100nF
R4
330
LED1
H2
Header-Male-2.54_1x02
Power
AC_IN1
HB9500-2P
R11
47K
47K
R10
D2
KBL410
R9
1K
PC817
PC817
R8
10K
RB0
5V
GND
RB7
P1
HB9500-2P
R7
MOC3021
MOC3021
R5 330
BTA20
Q1
NC
AC DIMMER MODULE
TITLE:
Egg Incubator
REV: 1.0
Company: UET - VNU
Sheet: 1/1
Date: 2021-05-20
Drawn By: Ngo Minh Khanh
EasyEDA