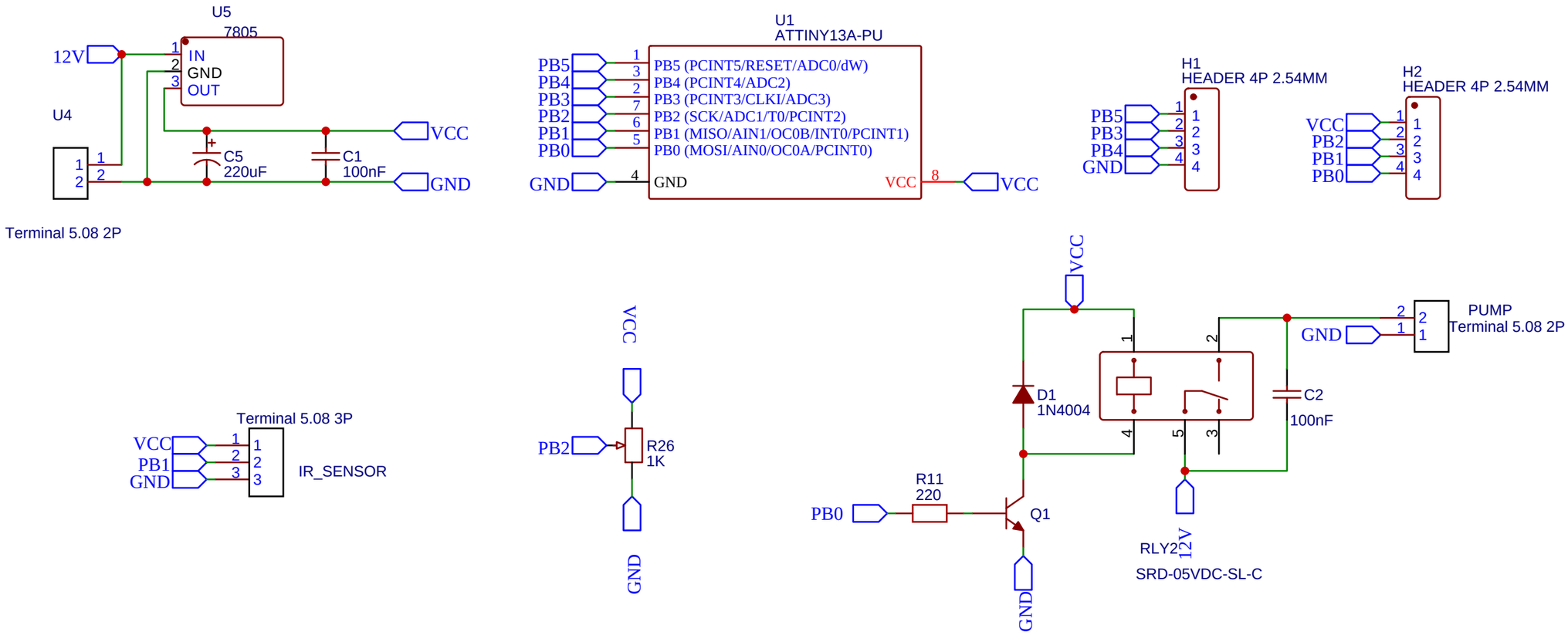

TITLE: Hand Washing Machine		REV: 1.0
EasyEDA	Company: UET - VNU	Sheet: 1/1
	Date: 2021-05-10 Drawn By: Ngo Minh Khanh	