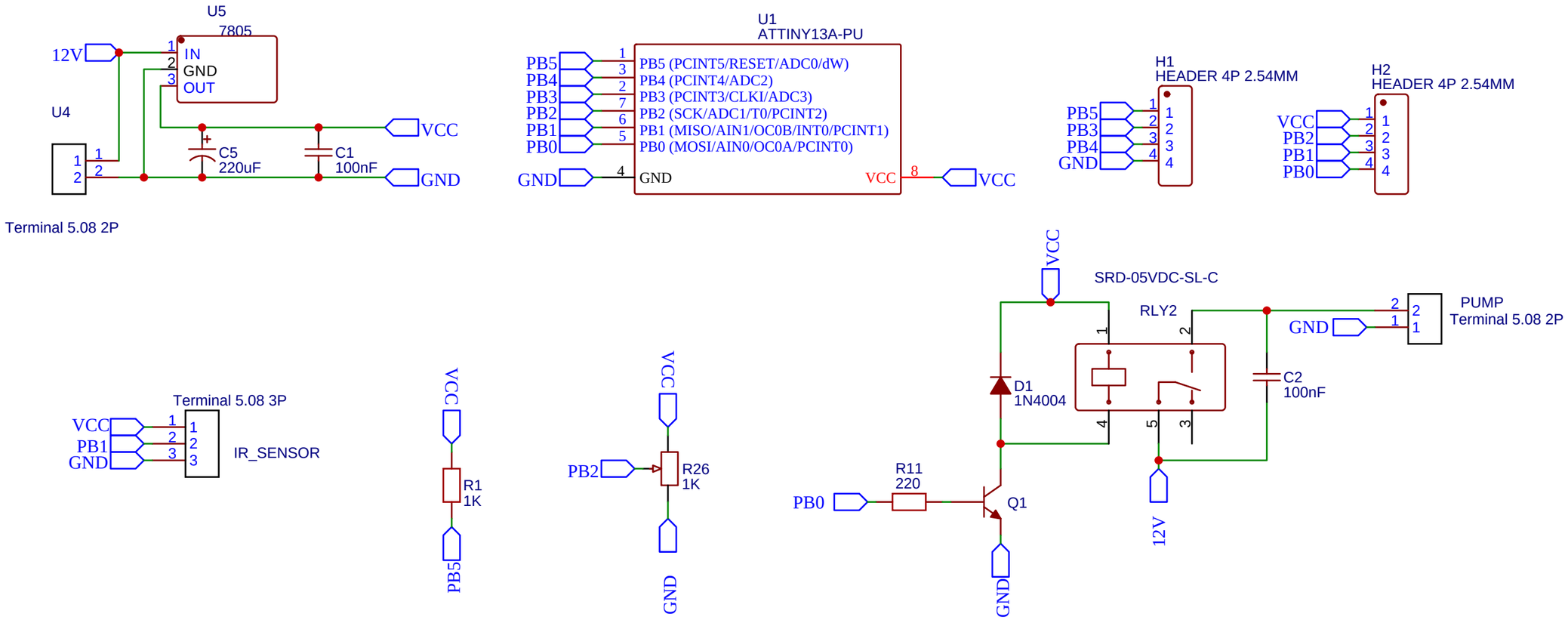

TITLE: Hand Washing Machine	REV: 1.0
Company: UET - VNU	Sheet: 1/1
Date: 2021-05-10 Drawn By: Ngo Minh Khanh	