Add Material Note

Add welding Symbol

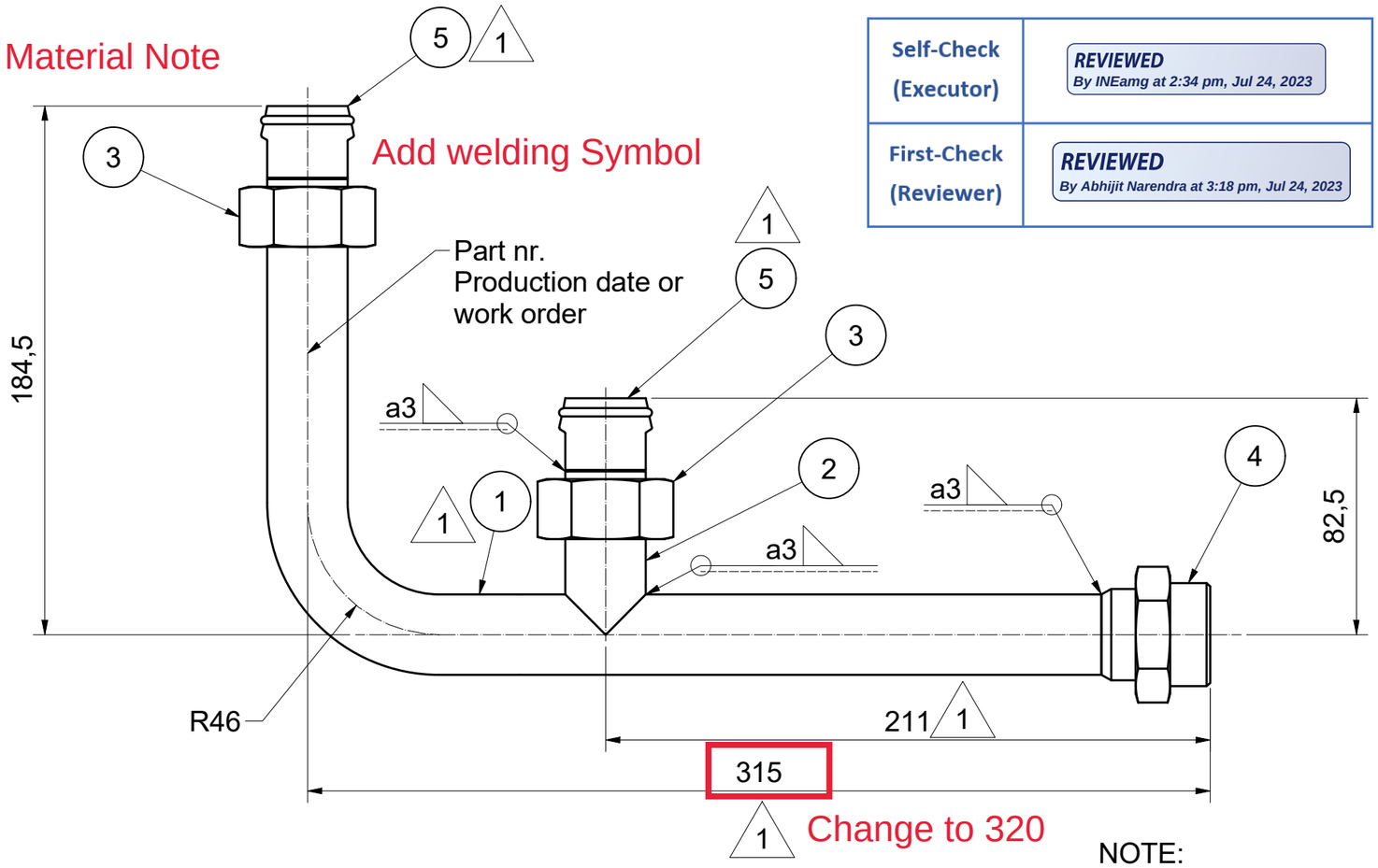

Self-Check (Executor)	REVIEWED By INEamg at 2:34 pm, Jul 24, 2023
First-Check (Reviewer)	REVIEWED By Abhijit Narendra at 3:18 pm, Jul 24, 2023

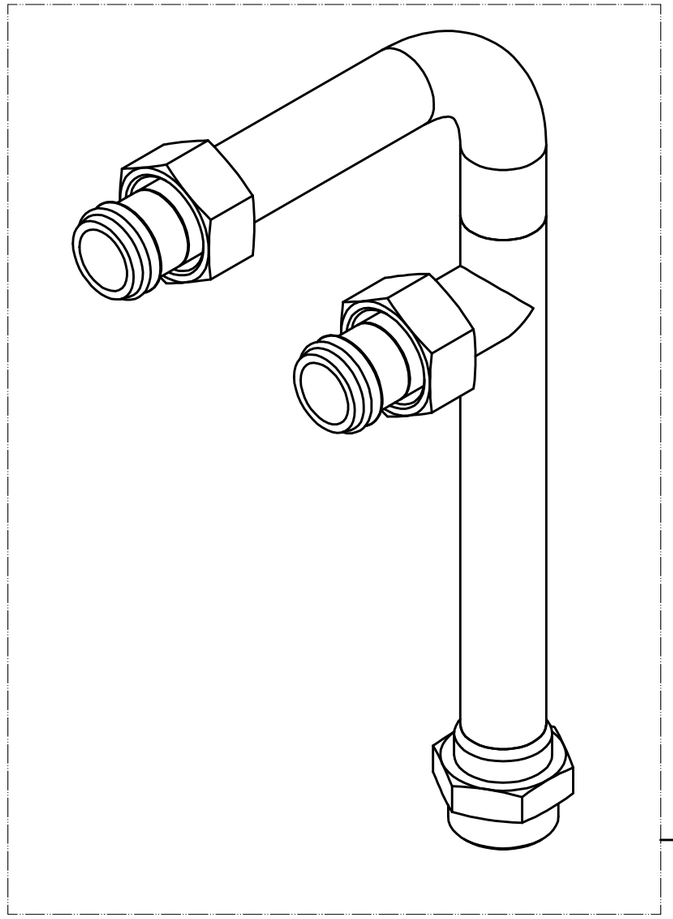

NOTE:
- BURRS AND SHARP EDGES REMOVED
- O-RING MUST BE FKM OR FPM

Add PED Data

Add Confidentiality Note

Add Welding data table

Add Note A on drawing

Add Logo

Parts List

Pos	Qty	Partnumber	R/S	Name	Material	Comments
1	1	9097556545	-	PIPE	0011 1233 05	Ø28x1,5
2	1	9097556545	-	PIPE	0011 1233 05	Ø28x1,5
3	2	0580001711	S	NUT	See Standards	
4	1	0580001982	S	BOSS	See Standards	
5	2	0580001907	S	WELDING NIPPLE	See Standards	

Tolerances, if not indicated, according to:	General tolerances	Welding	Cleanliness of components
	1350K - mK	1356K / B	6160 AIR / A

Name	PIPE	PIPE	Confidentiality Class acc. to 1102 K
Material	See Drawing		Confidential
Treatment	Zinc electroplated Fe/Zn 8 p F4 - AC-STD 6767 K		INV

STATUS	Scale 1 : 2	Family	A3	Compare	Owning Unit	Transferred from
	Drawn by INEyok	Blank nr.		Replaces	PNE	
WorkInProgress	Version Drwg	Blank wt Kg	Fini wt. 0.945 kg	Designation	Sheet 1 / 1	
	Des checked.	Prod checked.	Approved.	Date 3/4/2021	9097556545	

Ed	Position	Modified from	Date	Intr./Appd.	Parent 3D model	Ed . Version 3D
1		See Note A	2/20/2024	INEAMG	9097556545	