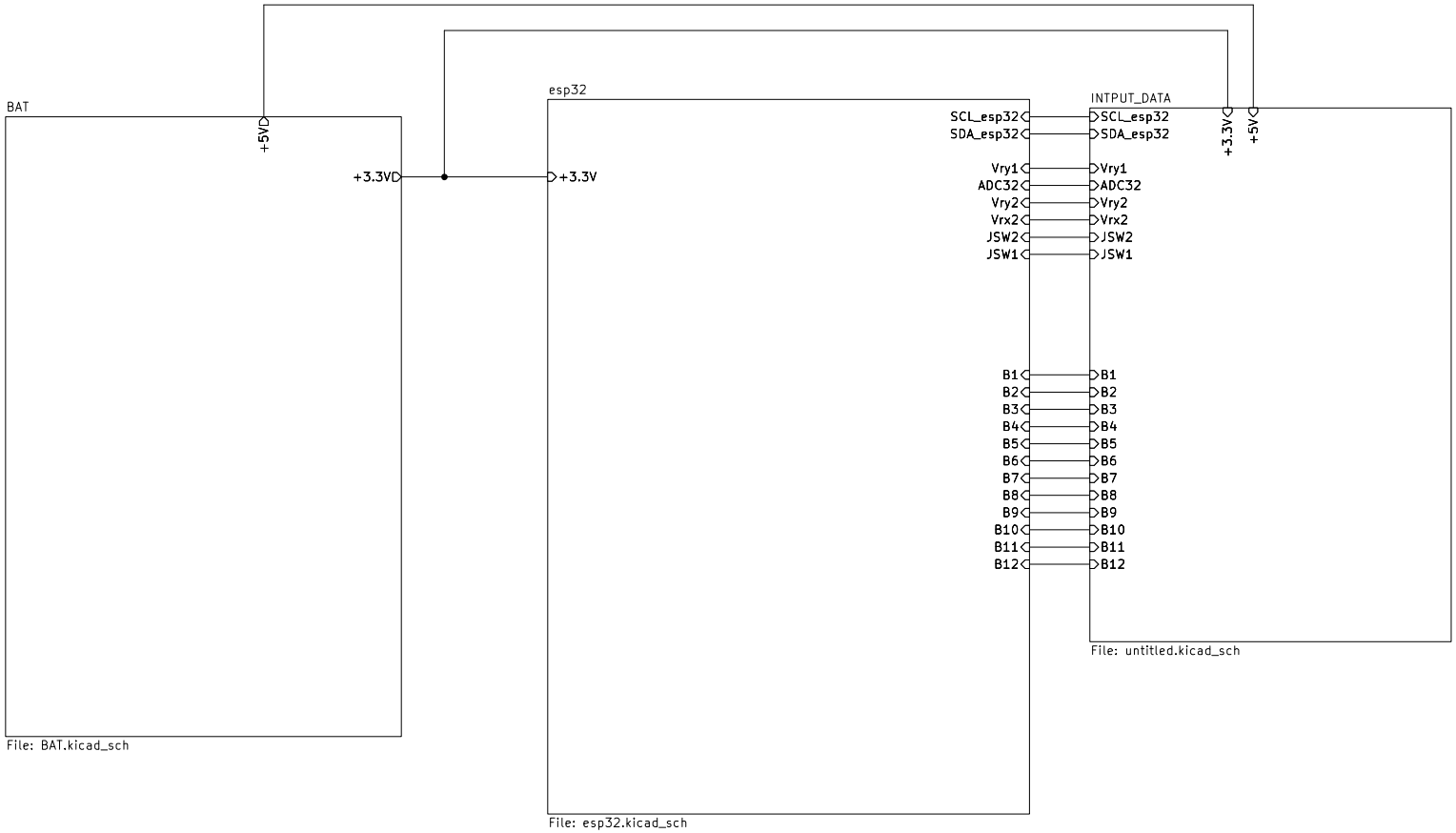
BAT
+5V
+3.3V
File: BAT.kicad_sch
esp32
+3.3V
SCL_esp32
SDA_esp32
Vry1
ADC32
Vry2
Vrx2
JSW2
JSW1
B1
B2
B3
B4
B5
B6
B7
B8
B9
B10
B11
B12
File: esp32.kicad_sch
INTPUT_DATA
SCL_esp32
SDA_esp32
+3.3V
+5V
Vry1
ADC32
Vry2
Vrx2
JSW2
JSW1
B1
B2
B3
B4
B5
B6
B7
B8
B9
B10
B11
B12
File: untitled.kicad_sch

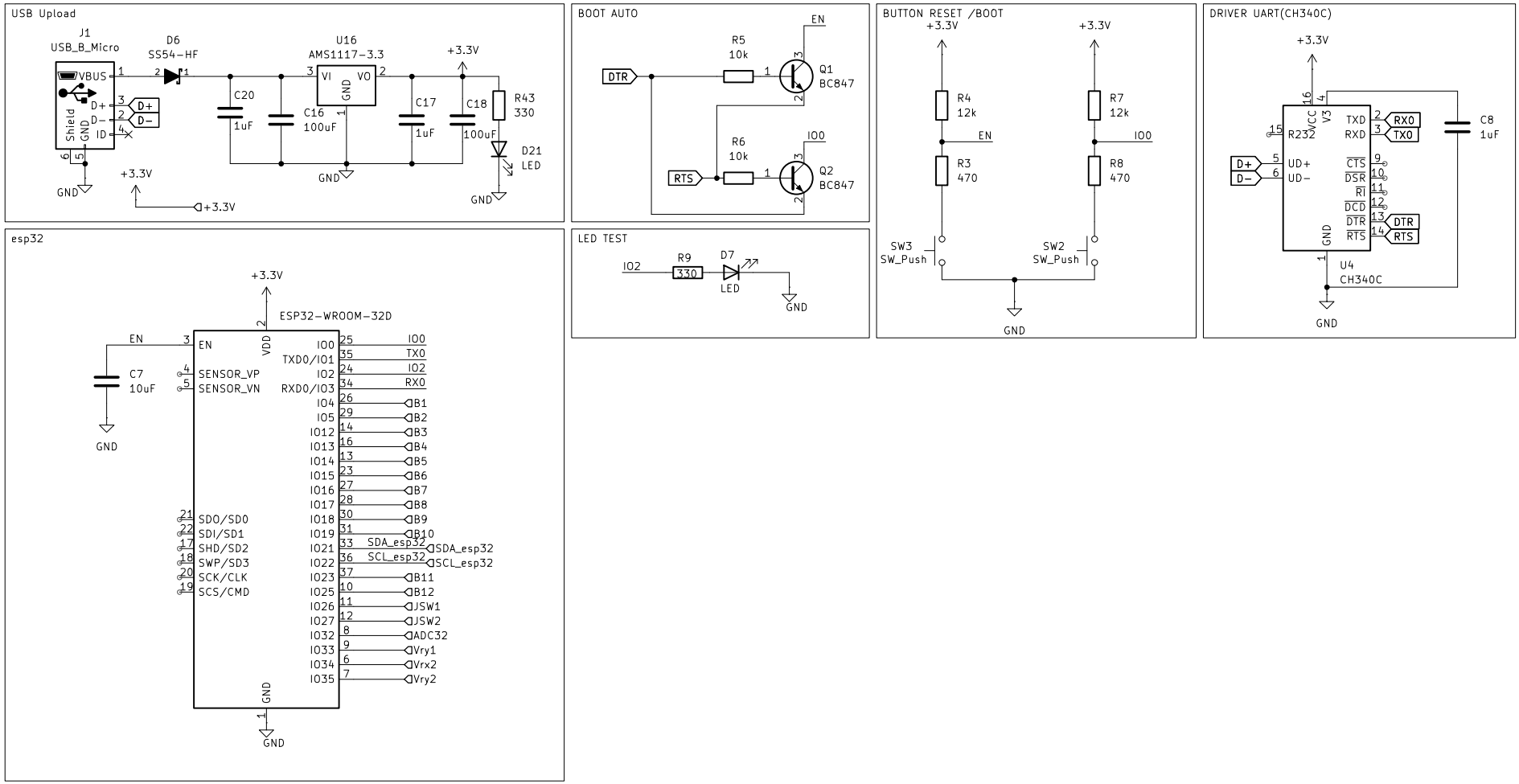
USB Upload
J1
USB_B_Micro
VBUS
D+
D−
ID
GND
Shield
D6
SS54−HF
C20
1uF
C16
100uF
U16
AMS1117−3.3
VI
VO
GND
+3.3V
C17
1uF
C18
100uF
R43
330
D21
LED
BOOT AUTO
DTR
R5
10k
R6
10k
RTS
EN
IO0
Q1
BC847
Q2
BC847
BUTTON RESET /BOOT
R4
12k
R3
470
R7
12k
R8
470
SW3
SW_Push
SW2
SW_Push
DRIVER UART(CH340C)
R232
VCC
V3
TXD
RXD
CTS
DSR
RI
DCD
DTR
RTS
UD+
UD−
RX0
TX0
C8
1uF
U4
CH340C
esp32
ESP32−WROOM−32D
VDD
EN
C7
10uF
SENSOR_VP
SENSOR_VN
IO0
TXD0/IO1
IO2
RXD0/IO3
IO4
IO5
IO12
IO13
IO14
IO15
IO16
IO17
IO18
IO19
IO21
IO22
IO23
IO25
IO26
IO27
IO32
IO33
IO34
IO35
SDO/SD0
SDI/SD1
SHD/SD2
SWP/SD3
SCK/CLK
SCS/CMD
SDA_esp32
SCL_esp32
B1
B2
B3
B4
B5
B6
B7
B8
B9
B10
B11
B12
JSW1
JSW2
ADC32
Vry1
Vrx2
Vry2
LED TEST
IO2
R9
330
D7
LED

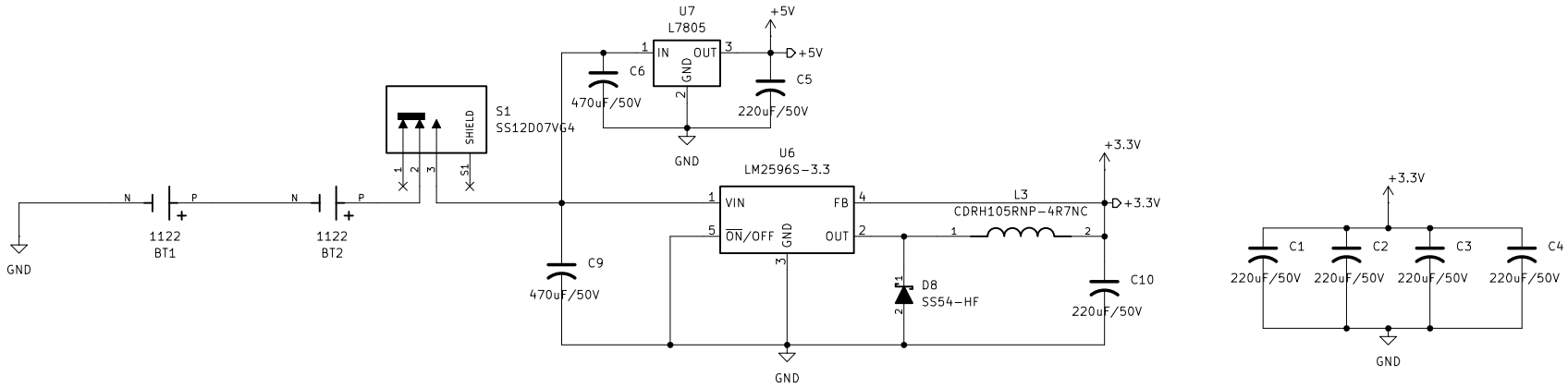
U7
L7805
IN
OUT
GND
+5V
C6
470uF/50V
C5
220uF/50V
GND
S1
SS12D07VG4
SHIELD
U6
LM2596S-3.3
VIN
FB
ON/OFF
OUT
GND
+3.3V
L3
CDRH105RNP-4R7NC
D8
SS54-HF
C10
220uF/50V
C9
470uF/50V
GND
N
P
1122
BT1
1122
BT2
GND
C1
C2
C3
C4
220uF/50V
GND

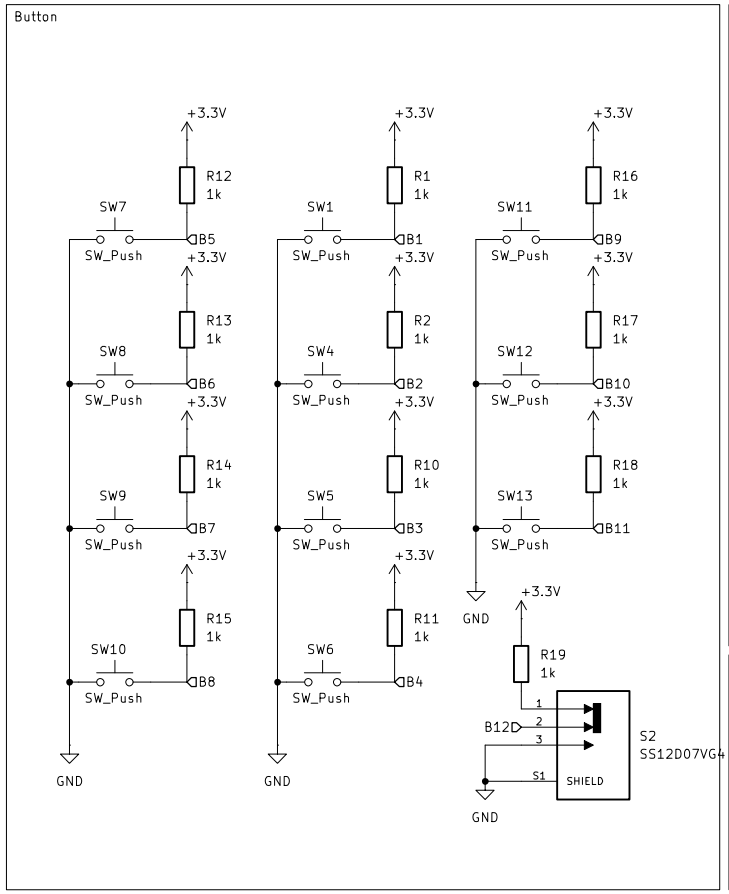
Button
+3.3V
R12
1k
SW7
SW_Push
B5
R13
1k
SW8
B6
R14
1k
SW9
B7
R15
1k
SW10
B8
GND
R1
1k
SW1
B1
R2
1k
SW4
B2
R10
1k
SW5
B3
R11
1k
SW6
B4
R16
1k
SW11
B9
R17
1k
SW12
B10
R18
1k
SW13
B11
R19
1k
B12
S2
SS12D07VG4
SHIELD

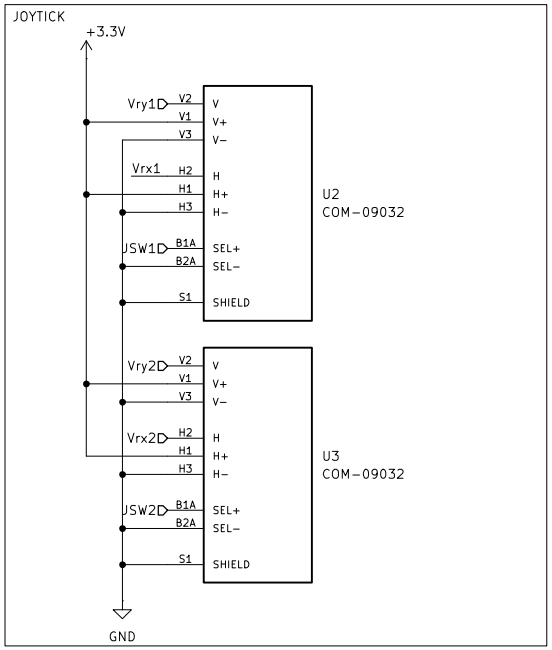
JOYTICK
+3.3V
Vry1
Vrx1
JSW1
Vry2
Vrx2
JSW2
V
V+
V−
H
H+
H−
SEL+
SEL−
SHIELD
U2
COM-09032
U3
COM-09032
GND

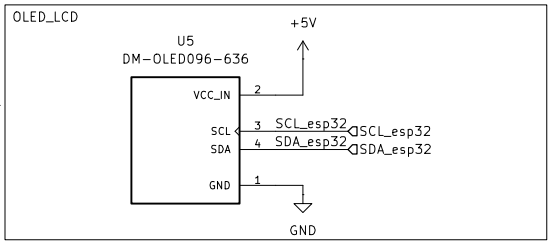
OLED_LCD
U5
DM-OLED096-636
+5V
VCC_IN
SCL
SDA
GND
SCL_esp32
SDA_esp32
GND

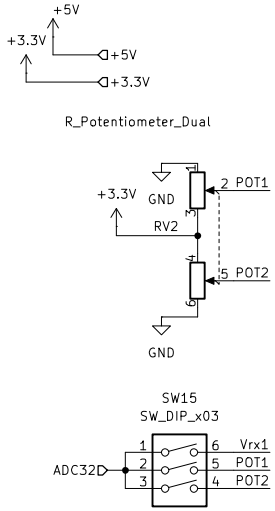
+5V
+3.3V
R_Potentiometer_Dual
GND
RV2
POT1
POT2
SW15
SW_DIP_x03
ADC32
Vrx1
POT1
POT2