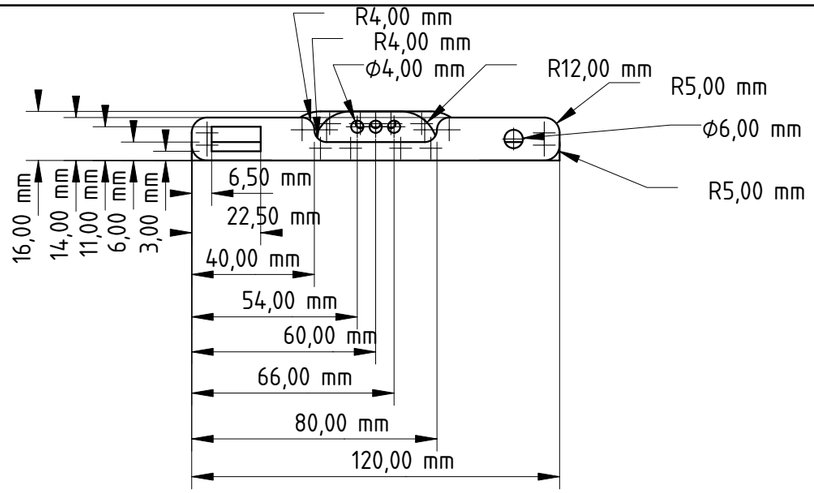

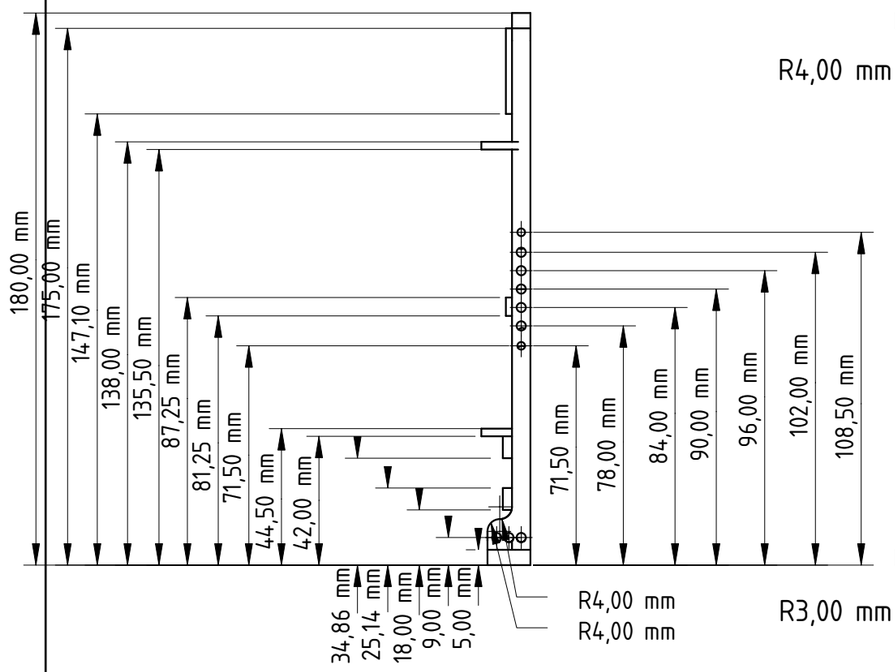

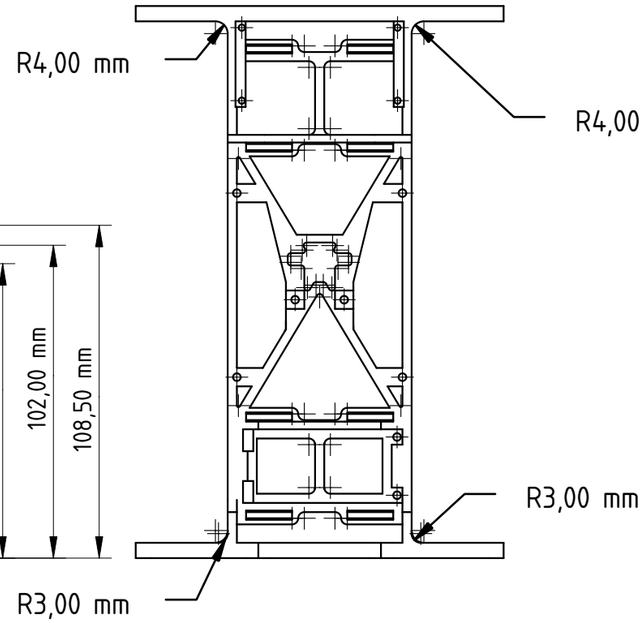

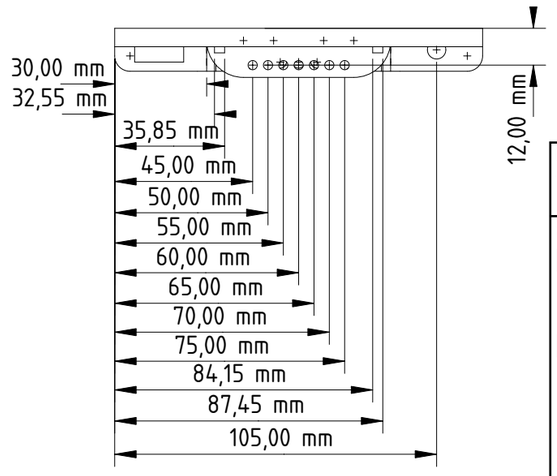

Created by: Team 4	Title: Hauptträger		
Supplementary information: Material: PLA FreeCAD DRAWING	Size: A3	Sheet: 1/14	Scale: 1:2
	Part number: 1 Drawing number: 1		
	Date: 11.06.2019		Revision: REV A