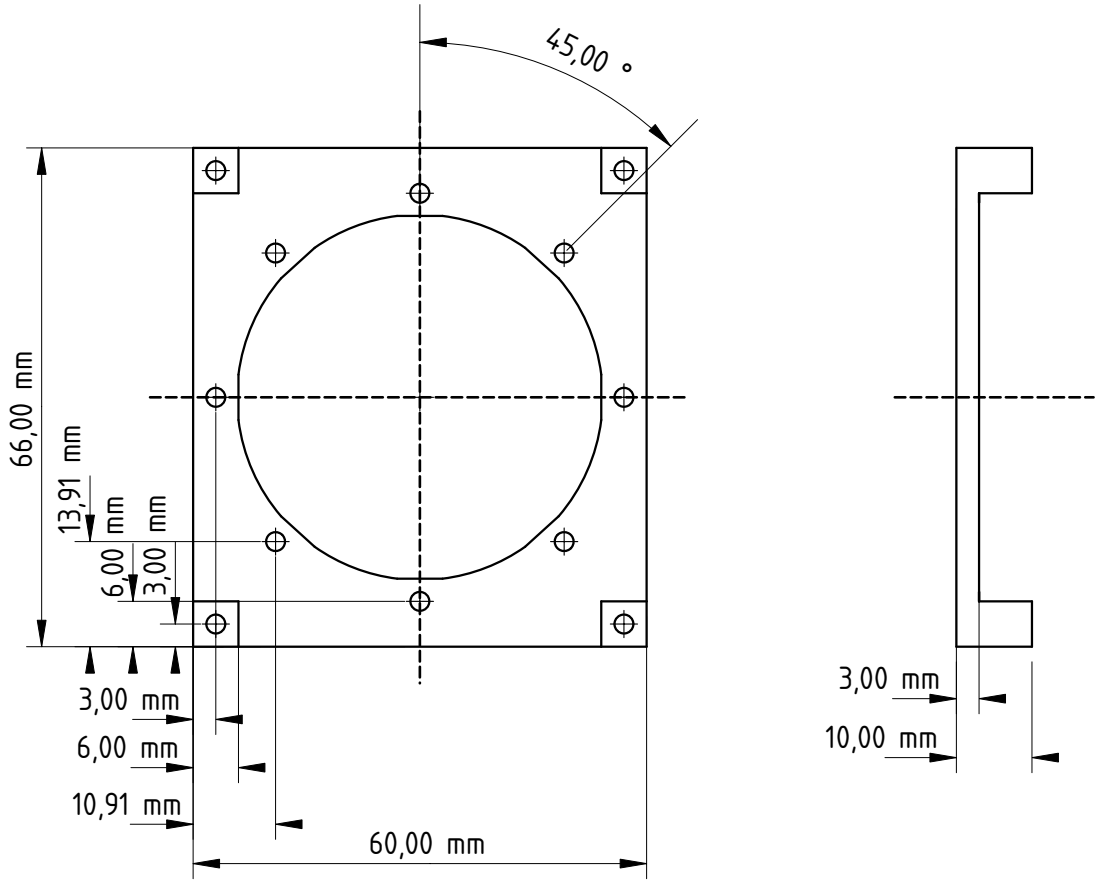

Created by:	Title:	Size:	Sheet:	Scale:
Team 4	Ei-Halter-Halterung	A4	13/15	1:1
Supplementary information: Material: PLA Alle Durchmesser: 2,5mm		Part number: 10 Drawing no.: 1		
		Date: 11.06.2019		Revision: REV A