ELEC2110-Fall'17-Exam 2

In Class Review

Name

1. Find V_0 in the following network using Superposition

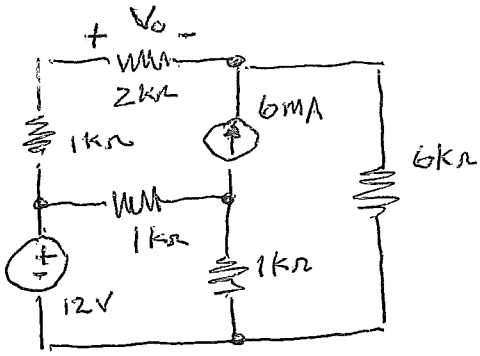

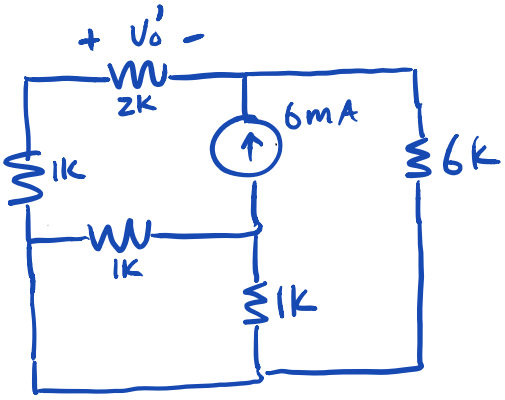

$$V_0' = -\left(\frac{6mA(6K)}{6K+2K+1K}\right)2K$$

$$= -8\ V$$

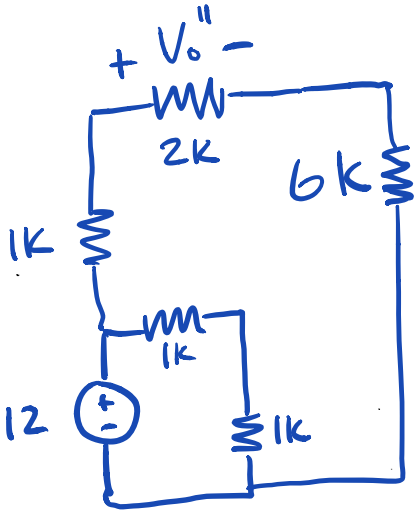

$$V_0'' = 12\left(\frac{2K}{6K+1K+2K}\right)$$

$$= 12\left(\frac{2}{9}\right)$$

$$= \frac{8}{3} = 2.66\ V$$

$$V_0 = V_0' + V_0''$$

$$= -8 + 2.66$$

$$V_0 = -5.33\ V$$

2. **Find V_0 in the network below using Thevenin's theorem**

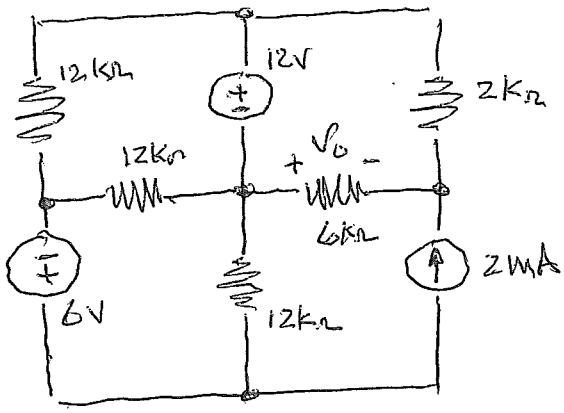

V_{oc}:

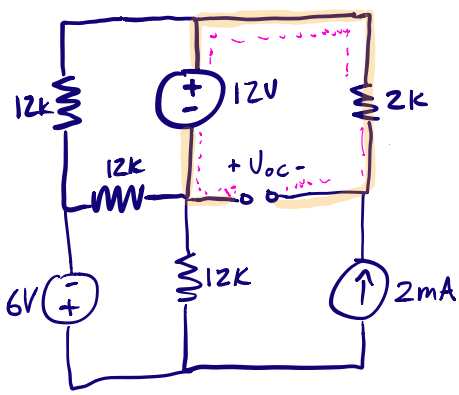

$$-V_{oc} - 12 - 2k(2mA) = 0$$

$$V_{oc} = -12 - 4 = -16V$$

All these are shorted out.

R_{Th}:

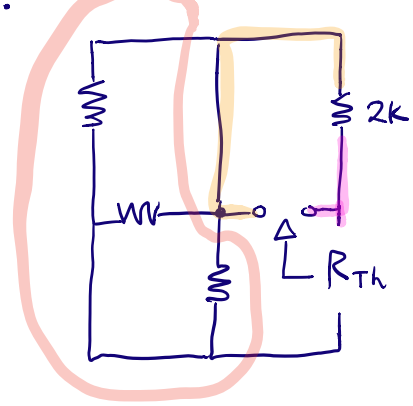

$$R_{Th} = 2k$$

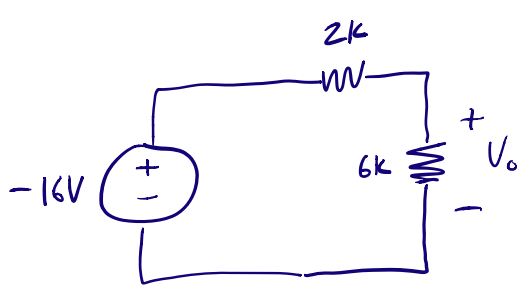

$$V_0 = \frac{-16 \cdot 6k}{(6k + 2k)} = -12V$$

3. Find I_o in the following circuit using Thevenin's theorem

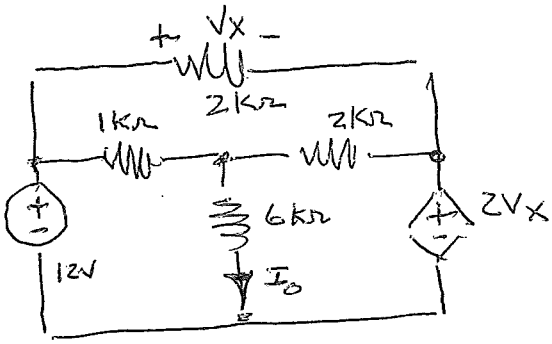

Steps:

1) Find V_{oc}
2) Find I_{sc}
3) Calculate $R_{Th} = \frac{V_{oc}}{I_{sc}}$
4) Set up Thevenin Equivalent Circuit and calculate desired value.

1)

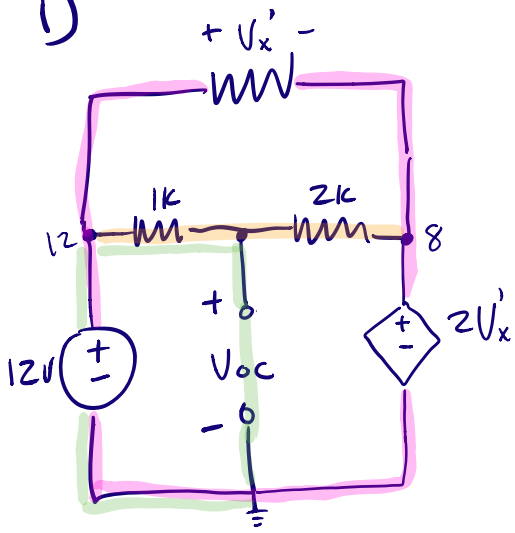

Loop:

$$-12 + V_x' + 2V_x' = 0$$
$$3V_x' = 12$$
$$V_x' = 4V$$

Find Current:

$$I = \frac{12-8}{1K+2K} = \frac{4}{3}\ mA$$

Loop:

$$-12 + 1K(I) + V_{oc} = 0$$
$$V_{oc} = 12 - I$$
$$= 10.667V$$

2)

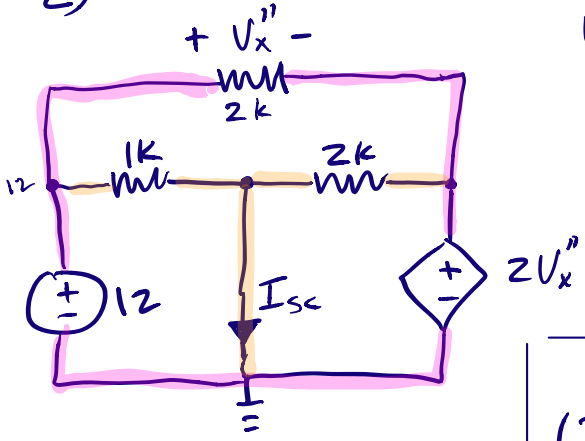

Loop:

$$-12 + V_x'' + 2V_x'' = 0$$
$$3V_x'' = 12$$
$$V_x'' = 4V$$

What goes in, must go out!

$$I_{sc} = \frac{12}{1K} + \frac{2V_x''}{2K}$$
$$= 16\ mA$$

(3) $V_{oc} = I_{sc} R_{Th}$

$$R_{Th} = \frac{V_{oc}}{I_{sc}}$$
$$= \frac{10.667}{16mA}$$
$$= \frac{2}{3}\ k\Omega$$

4) Thevenin Circuit

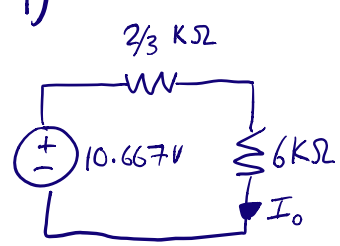

$$I_o = \frac{V_{oc}}{R_{Th} + 6K\Omega}$$
$$= \frac{10.667}{6.667}$$
$$= 1.6\ mA$$

4. In the following network, the switch closes at t = 0. Find $i_0(t)$ for t > 0.

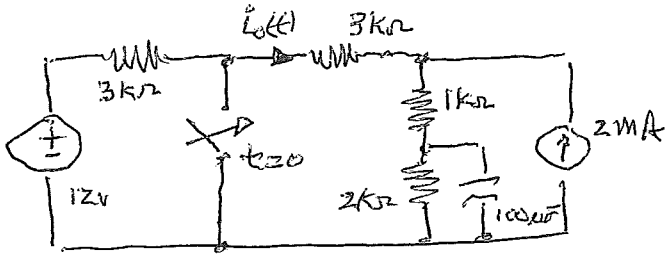

Steps:
1) Find $V_{capacitor}$ @ $t=0^-$ (before switch is closed)
2) Replace cap with a V-source = V_{cap} and solve for $i_0(t=0^+)$
3) Find $i_0(t=\infty)$
4) Find R_{Th} and calculate τ
5) Put it all together and find $i_0(t)$

0^-

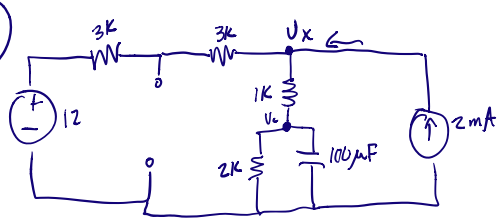

$$\frac{V_x - 12}{6k} + \frac{V_x}{3K} = 2mA$$

$$V_x = 8V$$

$$V_c(0^-) = 8\left(\frac{2K}{2K+1K}\right) = \frac{16}{3} = 5.33\ V$$

∞

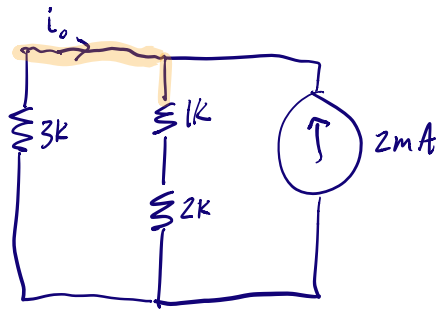

By inspection,

$$i_0(\infty) = -1mA$$

R_{Th}/τ

Parallel with each other

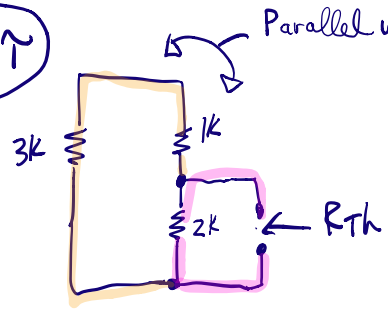

$$R_{th} = 2K \,//\, (3K+1K) = \frac{2K \cdot 4K}{6K} = \frac{4}{3}K$$

$$\tau = R_{th}C = \frac{4}{3}K(100\mu F) = 0.133\ s$$

0^+

Analyzing Node V_x is the quickest way of finding i_0

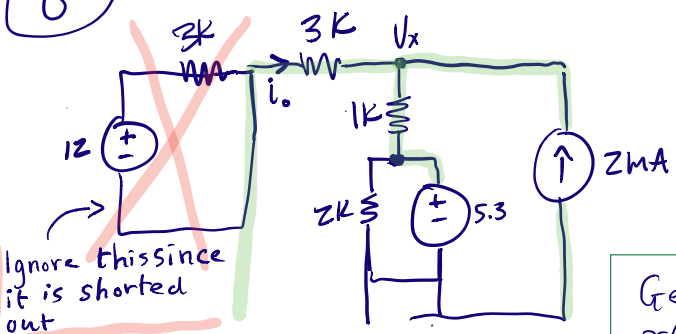

Ignore this since it is shorted out

$$\frac{V_x}{3} + \frac{V_x - 5.3}{1K} = 2mA$$

$$V_x = \frac{11}{2}$$

$$i_0(0^+) = \frac{-V_x}{3K}$$

$$= -\frac{11}{6}\ mA$$

$$= -1.83\ mA$$

General Solution:

$$x(t) = k_1 + k_2 e^{-t/\tau}$$

$$k_1 = i_\infty = -1$$

$$k_2 = i_{0^+} - i_\infty = -1.83 - (-1)$$

$$= -0.83$$

$$i_0(t) = -1 - \frac{5}{6}e^{-t/0.133}\ mA$$

$$-\left[1 + 0.83e^{-t/0.133}\right] mA$$

5. In the following network, the switch closes at t = 0. Find $i_0(t)$ for t > 0.

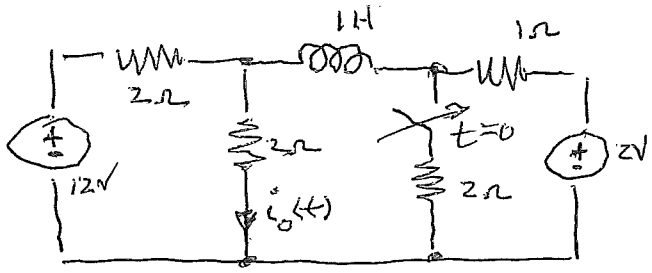

Steps:
1) Find current through inductor (0-)
2) Replace inductor with current source of value from (1) and solve for $i_o(0^+)$
3) Find value of i_o after a long time.
4) Find R_{th} and τ.
5) Put it all together to form $i_o(t)$

0^-

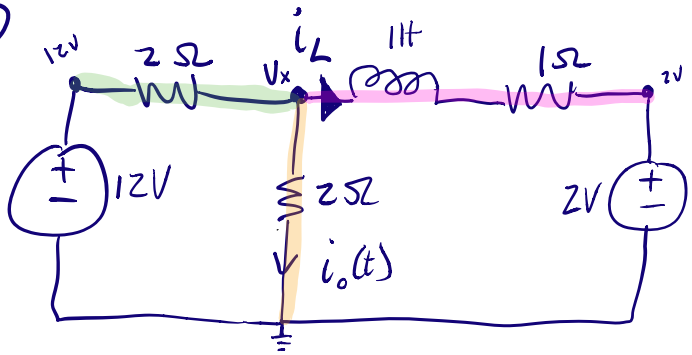

Since two of the three nodes are known values, the quickest way to solve this step is to use KCL at node Vx.

$$\frac{V_x - 12V}{2\Omega} + \frac{V_x}{2\Omega} + \frac{V_x - 2V}{1\Omega} = 0$$

$$V_x = 4V$$

$$i_L = \frac{\overset{V_x}{4} - \overset{\text{2 node}}{2}}{1\Omega} = 2A$$

0^+

Replace the inductor with a current source and calculate $i_o(0+)$

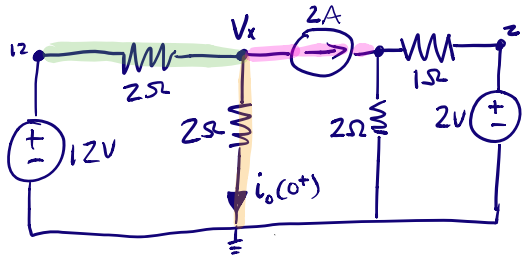

$$\frac{V_x - 12}{2\Omega} + \frac{V_x}{2\Omega} + 2 = 0$$

$$\frac{V_x}{2} - \frac{12}{2} + \frac{V_x}{2} + 2 = 0$$

$$V_x = 6 - 2 = 4$$

$$i_o(0^+) = \frac{V_x}{2\Omega} = 2V$$

∞

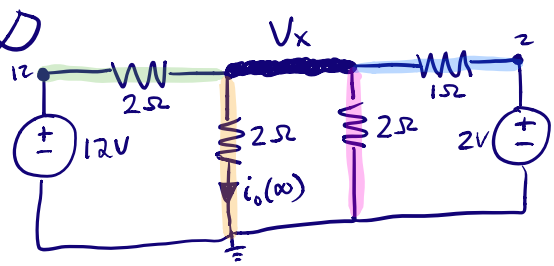

The switch is closed and after a long time the inductor once again looks like a short. We calculate $i_o(\infty)$

$$\frac{V_x - 12}{2} + \frac{V_x}{2} + \frac{V_x}{2} + \frac{V_x - 2}{1} = 0$$

$$\left(\frac{1}{2} + \frac{1}{2} + \frac{1}{2} + 1\right) V_x = 6 + 2$$

$$\frac{5}{2} V_x = 8$$

$$V_x = \frac{16}{5} = 3.2V$$

$$i_o(\infty) = \frac{V_x}{2} = \frac{8}{5} A = 1.6 A$$

R_{Th}

Looking into inductor.
Short voltage sources and open current sources (none in this problem)

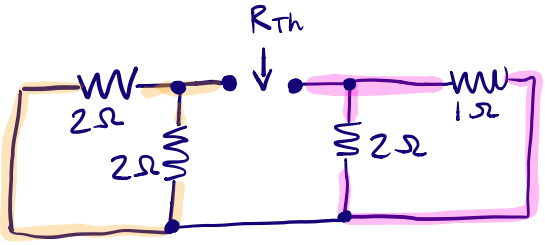

$$R_{Th} = 2//2 + 2//1$$

$$= \frac{2 \cdot 2}{2+2} + \frac{2 \cdot 1}{2+1}$$

$$= 1 + \frac{2}{3} = \frac{5}{3}\Omega$$

$$\tau = \frac{L}{R_{Th}} = \frac{1H}{\frac{5}{3}\Omega} = \frac{3}{5} s$$

Finally:

$$i_o(t) = 1.6 + 0.4 e^{-t/0.6} A$$