PRO 8475

A future-proof, ruggedised and versatile tablet that connects your workforce and business everywhere.

Connecting your workforce and business everywhere.

This future-proof, ruggedised and versatile tablet helps you to improve workflow efficiency, enhance customer service and boost productivity with Google Services.

PRO 8475 at a glance

Highlights

A future-proof and ruggedised tablet that offers **professional navigation** and **fleet management** with **Google Services**, connecting your workforce and businesses everywhere.

- Best-in-class truck navigation[1]
- Versatile and future-proof for tailored usage and control
  - Android 9 with GMS[2] for easy access to 3rd-party apps via the Google Play Store
  - Several Software Development Kits (SDKs) for bespoke business apps
  - MDM for professional control and Wefleet Solutions App Center
- Fleet management functionality in combination with Wefleet
  - Seamless messaging and order management between drivers and back office
  - Working time and mileage registration
  - In-vehicle driver coaching and driving behaviour feedback
- Robust hardware design, optimised for both in-vehicle and outdoor usage
  - 7” high-quality screen in a resistant rugged housing
  - Long battery life and excellent outdoor capabilities (e.g. anti-reflective screen)
  - LTE for high-speed mobile data connectivity, Bluetooth Low-Energy, Wi-Fi, NFC and RFID
  - Built-in 8-MP camera with flash
  - Rear-view camera support[3]

Powered by android

[1] Truck navigation is available with PRO 8475 TRUCK version.
[2] GMS (Google Mobile Services): www.android.com/gms/
[3] Rear-view camera support is subject to camera models.

Contents

- Introduction
  - PRO 8475
- Summary
  - Highlights
  - Target audience
  - Customer use cases
  - Google Services
  - Service integration
- Features
  - Overview
  - Superior ruggedness
  - Versatile cradle
  - Best-in-class navigation
  - Routing and POIs for large vehicles
  - OptiDrive 360 for drivers
  - Rear-view camera support
  - Integration via SDKs
  - Third-party apps
  - Manage and control: MDM and user profiles
  - Standalone features (without Wefleet)
- Benefits
  - Customer benefits
- Requirements and price
- Appendix
  - Specifications
  - What’s in the box?
  - Compatible accessories
  - Advantages over PRO 8275 and PRO 8375
  - How to update
  - PRO series comparison

The PRO 8475

- The PRO 8475 is our **top-of-the-line** PRO Driver Terminal
  - In International regions, is the successor to PRO 8275 and comes with the latest technologies and Google Services.
- **Future-proof premium tablet** with advanced technology and improvements:
  - Android™ 9 with Google Services (Play Store, push notifications, Google apps and more)
  - Qualcomm® Snapdragon™ Octa-core 1.8 GHz for higher speed
  - LTE category 6 for even faster over-the-air downloads
  - Superior ruggedness (protected against dropping, shocks, UV radiation, vibration, water and dust)
  - Superior screen quality and anti-glare etching make it perfect for outdoor use
  - Enhanced connectivity, USB Type-C, electronic compass, gyroscope and more
  - Device can be conveniently held in one hand
  - Best-in-class cradle for easy docking with versatile connection ports in a compact size
- Fully **customisable** and **configurable**
  - Open Android platform with advanced APIs thanks to Android 9 and Google Mobile Services (GMS)
  - Customisable user rights (two user profiles: owner and restricted user)
  - Mobile Device Management (MDM)
  - Powerful integration capabilities with three fit-for-purpose SDKs

The cradle at a glance

Undocking button

USB host

USB Type-C

Device connector

Improved docking usability

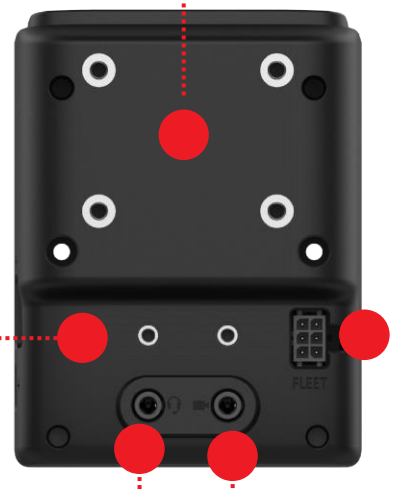

Connection for cable fastening clips

Video port

Audio port

Vertical distance for easy installation

Recess for better in-hand grip

AMPS for mounting

FLEET port

Screws for fixed installation

Improved guiding ribs

Target audience

- Primary focus
  - Decision makers: Owner/MD, fleet manager and operation manager

Who	Key verticals	Key messaging/offer	Unique selling points/features
• Medium to large businesses • Any business with drivers of heavy commercial vehicles or engineers driving vans	• Transport and logistics • Service and maintenance • Construction	• Customise the PRO Driver Terminal to suit your business needs. • Enable drivers to collect data from the field. • Seamlessly integrate and connect data to your back-office systems. Put your data to the fullest use to make smarter decisions, improve customer service and drive efficiency. • Ruggedised built-for-purpose PRO Driver Terminal for the professional driver. Rich features, tools for data collection and driver safety all in one device.	• It comes customisable with open architecture and SDK. Get easy access to trusted and proven apps from the biggest partner network. • Easy API enriches data sets, together with best-in-class navigation and ETAs. That means improved customer service, productivity and efficiency. • Keep drivers safe with TomTom truck navigation and OptiDrive 360 driving behaviour feedback and advice. • Get rear-view camera support without the need for an extra camera monitor via a compact yet versatile cradle.

- Potential opportunities
  - Businesses who need a ruggedised, large-screen, premium navigation device for standalone use without Wefleet (see next slide).

Additional target audience: Standalone

- Secondary focus
  - Any individual who would like to purchase a ruggedised tablet with professional navigation.

Who	Key verticals	Key messaging/offer	Unique selling points/features
• "Standalone customers" that are not using Wefleet	• Any industry	• A future-proof, ruggedised and versatile tablet that offers professional navigation with offline maps.	• Preinstalled offline maps for car/truck routing • Android 9 with Google Services for easy access to third-party apps • Tablet can serve as an internet access point for in-vehicle entertainment or outside vehicle internet browsing once a SIM card is inserted

Customer use cases

Customer/vertical	Use case	Proof points/features
Transport and logistics	• Freight documentation • Standstill reporting • Advanced vehicle checks	• Speed up invoicing processes. Drivers can scan and send freight documents directly to the office. • Reduce your fuel costs by requesting driver feedback when a vehicle stands still for a certain period of time. • Comply with safety regulations, using NFC tags for advanced vehicle checks to ensure your drivers are following the regulations.
Construction	• Ruggedised for harsh conditions	• Enjoy superior ruggedness, with a water/dust-resistant and shock/drop-proof device. • Manage your workflow on-site with a bright screen that can be used while wearing gloves. • Use the PRO Driver Terminal outside with a long-lasting battery and fit-for-purpose accessories like a hand strap.
Service and maintenance	• Vehicle checks • Inventory management • Technical documentation • Order management	• Prove your compliance with road safety regulations, enforcing vehicle checks before mobile workers can use their vehicles. • Know what materials or spare parts your vehicles have onboard. This way you send the best-suited driver with the right spare parts to the customer without losing time. • Store all information and technical documentation needed to complete a job right on the tablet. • PRO 8475 can be used in combination with all order management functionalities of Wefleet, with sending specific instructions for all jobs of a driver. Customers can also book Wefleet Order Optimisation (additional feature), which helps dispatchers to reduce their planning efforts, get more jobs done and reduce the time their drivers spend on the road.
Courier and express services	• Transparent delivery documentation	• Automate your delivery process. Provide pickup and delivery addresses to your driver, request scanning of parcels and obtain delivery proof via digital signature capturing. Get all the information – in real time – in your back office system as soon as the delivery process is completed.
Passenger transport	• Rear-view camera • Registration of on-board sales	• Connect a rear-view camera to the cradle of the PRO Driver Terminal for easier and safer manoeuvring. • Register on-board sales per country to comply with country-specific VAT regulations.

Google Services use case

Powered by android

- Why do customers want to have Google Services?

1. Customers want to use third-party apps that make use of **push notifications.**
   - Customers want to push notifications to their mobile workforce via third-party apps to boost productivity and enhance communication at the right time and in the right place (example see slide 13).
2. Customers want to use the standard **Google apps** (Chrome, Gmail, Google Docs, Google Maps, etc.).
   - Google apps are very popular, so many drivers are already experienced in using them properly from their own smartphone. So, no onboarding is needed.
3. Customers want to use third-party apps that come with an integrated map view from **Google Maps.**
4. Customers want to benefit from the **advanced security mechanisms** of Play Protect (e.g. malware detection)
5. Customers want to prevent drivers using the **Google Play Store.**
   - Avoid the drivers playing games or watching movies and therefore being less efficient
   - The solution: With PRO 8475, companies can restrict their drivers from accessing the Google Play Store by using the restricted user.*

* Restricted users cannot access the Google Play Store but they can still use the other Google Services (e.g. push notifications, Google Maps).

Google Play Store

Powered by android

- Thousands of useful apps for an effective and efficient daily workflow.

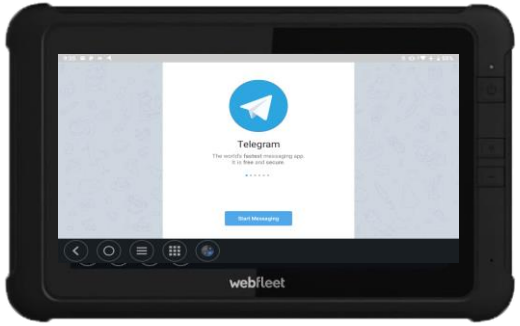

Telegram

Versatile messaging

Microsoft Lens

Document scanner

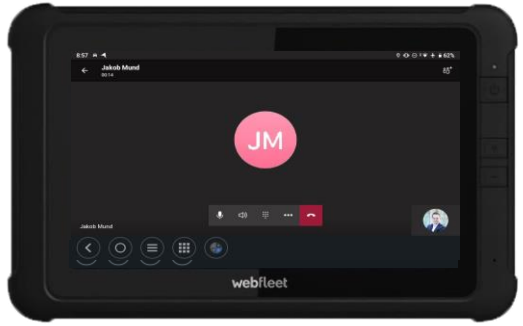

Microsoft Teams

Screen sharing

Google Drive

Cloud file storage

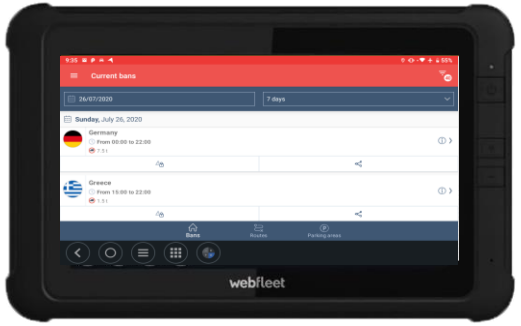

Current bans for trucks

Trip preparation

Ruler

Incl. bubble meter

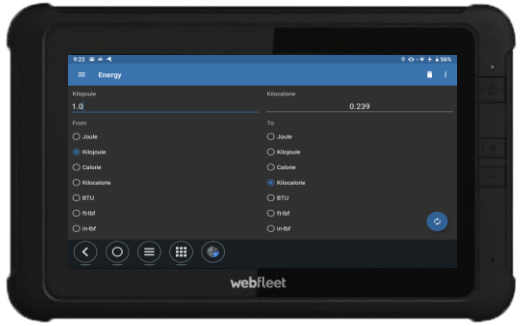

Unit Converter

Conversion of all units

Sound Meter

Machine volume inspection

Push notifications

Powered by android

- Apps can trigger push notifications. For example, when receiving documents via an online storage app.
- Notifications can be freely configured according to individual needs.

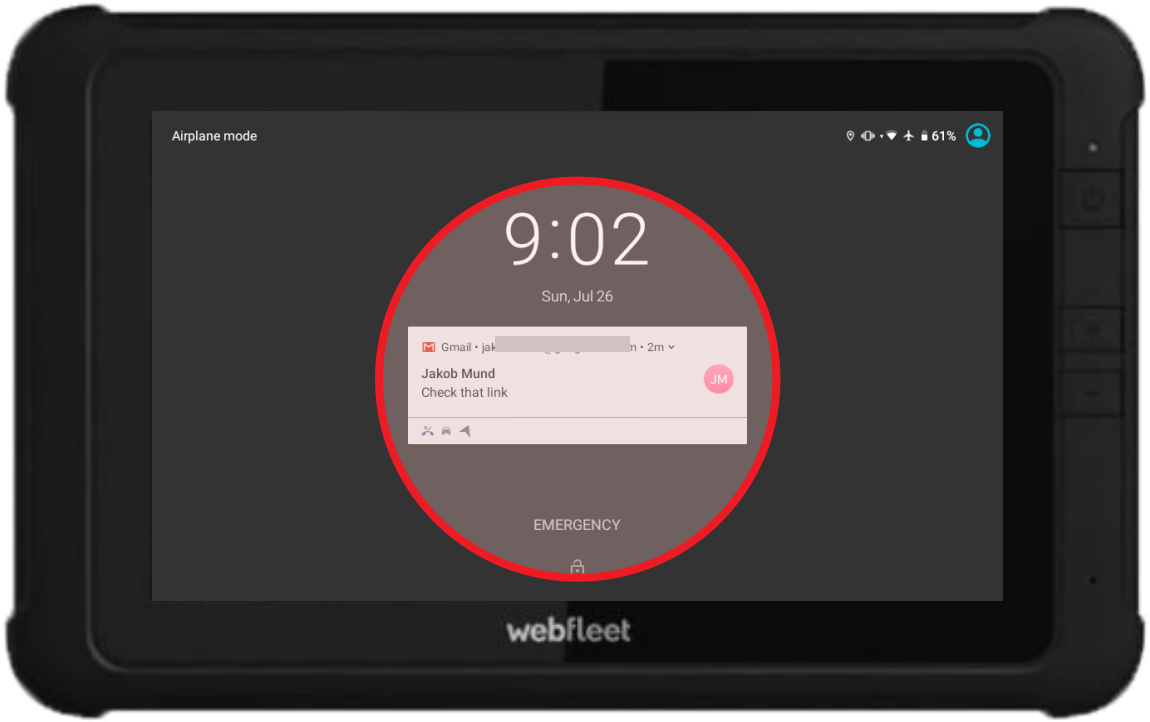

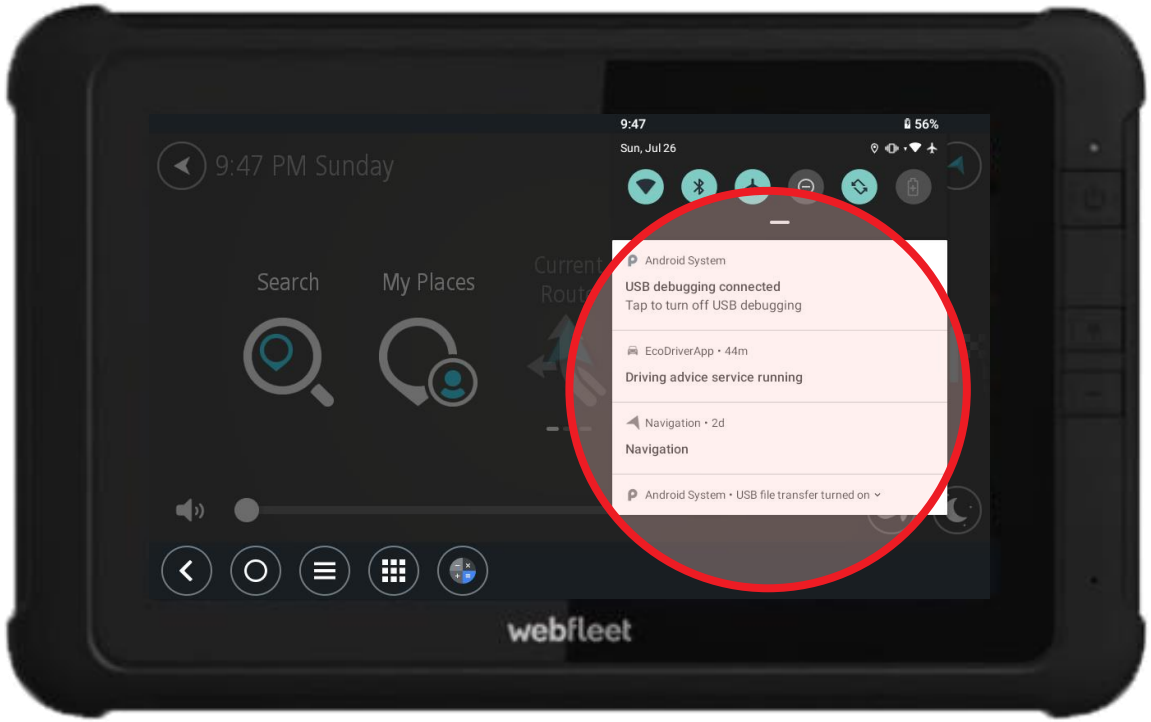

Ecosystem of PRO 8475

CUSTOMISE

Google Services
Google Play Store, Google Apps, Push notifications, Android APIs

Wefleet Solutions App Center
Fit-for-purpose business apps

PRO.connect SDK
Access Wefleet functionality and customise order workflow

Device customisation
Control settings, access rights and user restrictions

NavApp SDK + MapLib SDK
Integrate navigation into your custom applications

PRO DRIVER TERMINAL

Messaging

Order Management

OptiDrive

Logbook

Working Time

Driver ID

Mobile Device Manager
Manage and control PRO 8475 remotely

PRO 8475 and SIM

7"

Navigation and traffic
Best-in-class navigation helps drivers choose the fastest route with accurate ETA, avoiding traffic with the latest maps

Push notifications
Notifications from third-party Android apps

Voice calls

LINK
Telematics black box

Via PRO 8475's cradle
Connect to rear-view cameras, printers, flash drives, scanners and more.

CONNECT

Wefleet.connect
Integrate Wefleet with your office applications

Wefleet
Software-as-a-Service (SaaS) fleet management platform

LINK.connect
Connect with 3rd-party Bluetooth devices and transmit data from the field to your back office

Feature overview: Hardware

7’’ high-end tablet

The bright screen comes with a specific anti-reflective finish that makes it easy to look at regardless of weather conditions. The screen can even be operated with gloves.

Ruggedised design for outdoor usage

A highly ruggedised housing makes it ideal for use under harsh conditions. The device operates reliably outside the vehicle with a long battery life and a design that makes it comfortable to hold in one hand.

Versatile cradle

The compact yet powerful cradle holds the device securely and the magnetic design enables a convenient undocking experience. The cradle comes with several connection ports for professional use.

LTE, Wi-Fi, Bluetooth and NFC

Wireless connectivity with an internal LTE cat. 6 modem[1] for fast download speeds and great network coverage, as well as Wi-Fi, Bluetooth and NFC/RFID with all important standards for wireless communication and professional use.

Voice calls

PRO 8475 supports voice calls (e.g. Skype, Telegram). The device can also be connected to hands-free systems or headsets.

Built-in camera and rear-view camera support

The integrated camera with flash enables image and video capture, and the dedicated video input supports the connection of a rear-view camera for more driving convenience and safety.[2]

[1] Data connectivity is not included – requires microSIM for LTE connections.
[2] Rear-view camera compatibility is subject to camera models.

Feature overview: Software

Android 9* with Google Services

Get access to thousands of useful business apps in the Google Play Store, support for push notification for third-party apps, access to Google apps, advanced security with Play Protect and more.

Best-in-class (truck) navigation

Professional TomTom navigation uses a complex network of live traffic data and advanced algorithms to create the fastest routes and accurate ETAs. Large vehicle-specific routing** helps to keep your drivers on the most suitable roads.

Order management

Send jobs and order instructions straight from your office to the PRO Driver Terminal. Drivers can then navigate easily to the destination.

Fully customisable

PRO 8475 comes with several fit-for-purpose SDKs, so you can build business apps to manage processes like vehicle checks and digital signature. You can also fully manage the device via the MDM for remote updates and fast deployment of content.

Driving behaviour and messages

OptiDrive 360 provides active driving feedback and advice in real time for safer and more efficient driving. Text-to-speech technology reads messages aloud without disturbing your drivers.

Working time and mileage registration

Record working hours with a simple tap on the screen. Use Logbook to capture mileage and register a journey as private, commute or business.

* Android 9 has the benefit that it supports advanced user restrictions (restricted profiles) which are not yet available on Android 10.
** Available only with the PRO 8475 TRUCK version.

Superior ruggedness

Drop-proof
Protected against drops from 1.5m
(MIL-STD-810G certification)

Water-protected
Protected against water / spray
(IPx4 certification)

Break-resistant
Protected by hardened
glass (level 6H+)

Dust-protected
Protected against dust
(IP5x certification)

Shock-proof
Protected against 20G peaks shocks
(SAE-J1455 standard)

UV-resistant
Protected against
UV radiation

Vibration-proof
Protected against strong vibration
(SAE-J1455 standard)

Versatile cradle

1. **AMPS mounts**
   - Compatible with various mounts
2. **Fixed installation**
   - Screws are included
3. **Easy docking/undocking**
   - Magnetic guiding and huge release button
4. **Video port**
   - External cameras
5. **Audio port**
   - Headset or line-in audio from vehicle
6. **FLEET port**
   - Charging via vehicle battery
7. **USB Type-C**
   - Charging via car charger
8. **USB host**
   - Scanners, printers, flash drives and more

Installation and docking

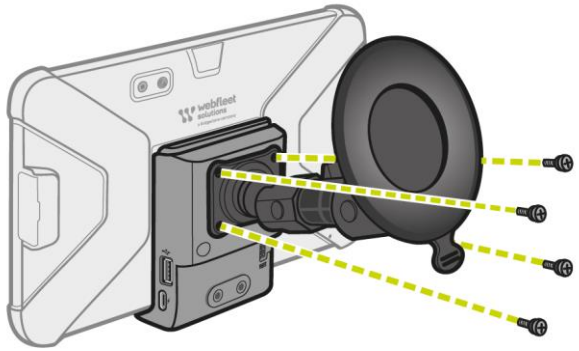

Mounting

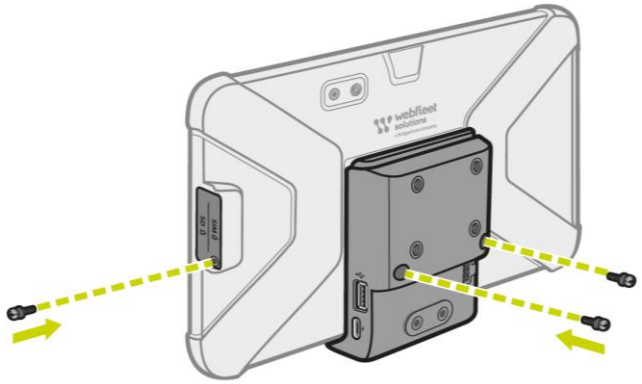

Fixed installation

Black: GND
Red (POS): Ignition
Blue (IGN): Ignition

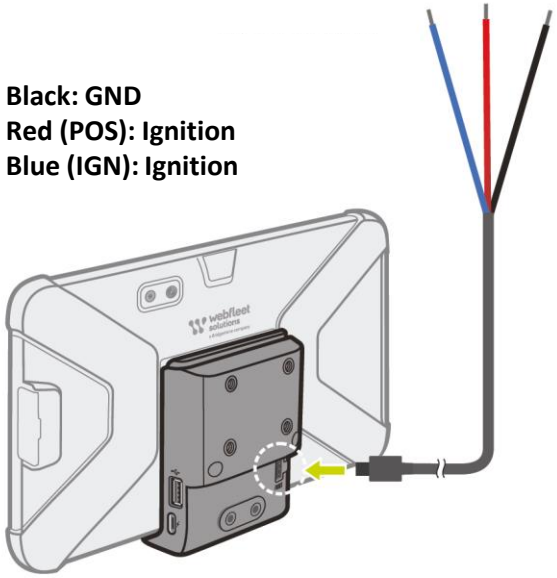

Power connection

Docking

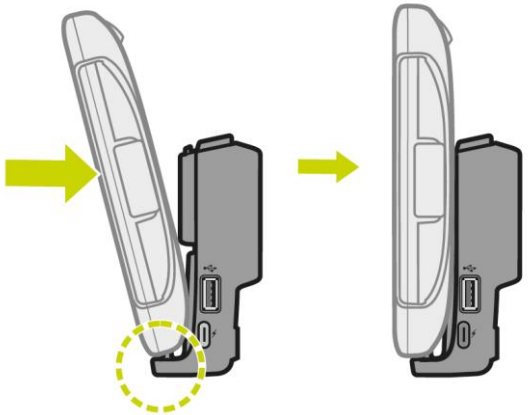

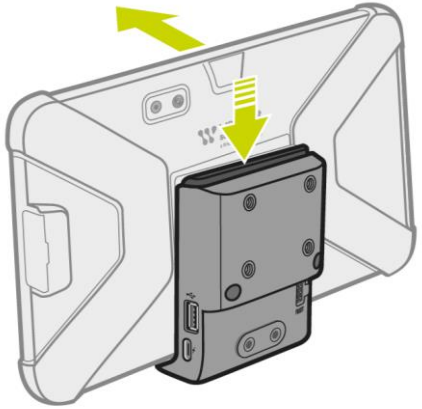

Undocking

Best-in-class navigation

TomTom Traffic*

Bypass traffic and provide accurate ETAs thanks to TomTom Traffic's intelligent real-time routes.

TomTom Speed Cameras*

Avoid fines with speed camera alerts that let you know the limit, wherever you are.

TomTom Maps*

Utilise award-winning HD Mapping technology trusted by Apple, Uber and others. Free-of-charge updates ensure you always drive with the latest maps.

* Your device comes with regular software and fixed speed camera updates and seasonal (4 times per year) updates for maps. To download these updates you need an active internet connection via Wi-Fi® or a computer with access to the internet. Your device also comes with regular traffic and speed camera services. To receive these services as part of your Wefleet contract, your device must be connected to a LINK with an active Wefleet LIVE subscription. To receive these services without Wefleet subscription, your device needs to be smartphone-connected or equipped with a SIM including data. The speed camera services may be prohibited in some countries and should only be used in compliance with local legislation. Speed cameras are not available in Germany, Switzerland and France. In France, you can only access Danger Zones.

All of these services and updates will be available as long as your device is fully operational. Fully operational means that the device is able to receive software updates, service updates, content and works with current accessories. A device will not be fully operational when one of these can no longer be received by the device or is no longer available. As the map and navigation software technologies evolve they may require newer hardware technology to support this. In case the hardware is no longer compatible, updates will not be possible. Services and updates can only be used on the device they have been purchased with and cannot be transferred to another device.

Best-in-class navigation

Advanced Lane Guidance

Clearly see which lane to take at key junctions or highway exits, so you don't miss your turn.

3D Navigation

Get a better overview of your surroundings. You can pinch, zoom or swipe the interactive map for more details.

My Routes

Send guided and forced routes from Wefleet to the PRO Driver Terminal.

Routing and POIs for large vehicles

- Truck navigation consists of two components:

1. **Truck-specific routing algorithm**
   - Favours main roads over small ones
   - Avoids small streets, sharp turns and U-turns as much as possible
   - Uses truck-specific speed assumption
   - Works for all countries

2. **Access restrictions based on the truck profile** (available for over 30 countries*)
   - Height, width and length
   - Weight and weight per axle
   - Hazardous materials (load)

- Dedicated points of interest (POIs) for large vehicles:

50,000 dedicated POIs pre-installed

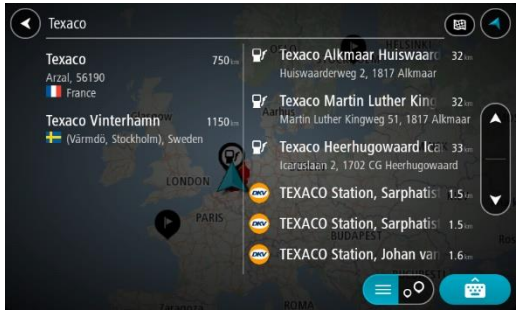

Find with free text search

Visible during turn-by-turn navigation

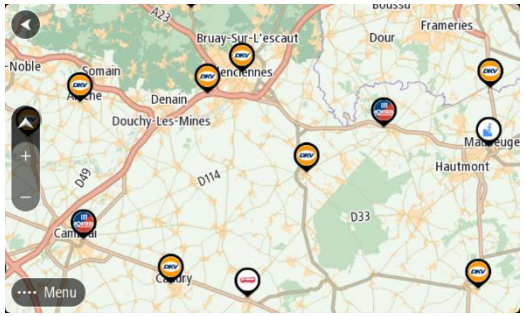

Visible on map

* See Knowledge Base

OptiDrive 360 for drivers

- OptiDrive 360 empowers drivers to improve driving performance continuously.

LEARN

Tips and tricks

Before the trip

COACH

Feedback and advice

During the trip

EVALUATE

Driving statistics

After the trip

KPIs	In-vehicle advice	
Speeding		
Driving events		
Constant speed		
Green speed		
Idling		
Fuel consumption		
Coasting		
Gear shifting		

Note: LINK 105 or FMS connection required for real-time fuel consumption, idling, coasting and gear shifting.

Rear-view camera support

- Connect external cameras easily via 3.5 mm video-in port*
- Enjoy more convenient driving and better safety
- Save money and space on the dashboard (no dedicated monitor needed)
- Utilise pre-installed apps and widgets, such as parking guidance
- Auto switch to camera view when reversing

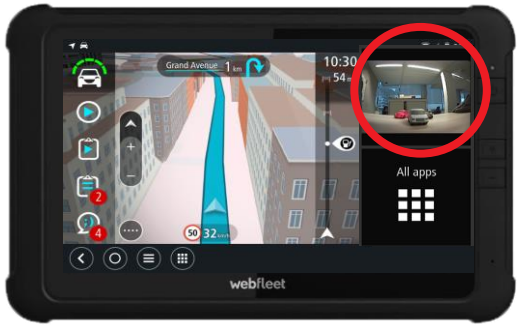

WIDGET
On home screen

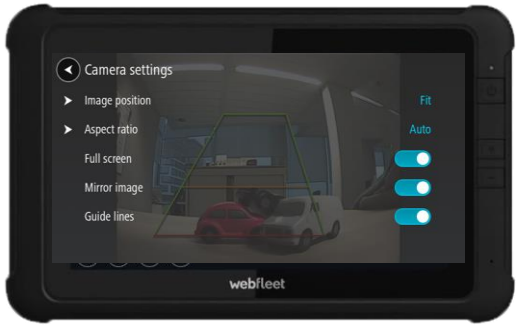

APP PRE-INSTALLED
Easy configuration

FULL-SCREEN
Full visibility

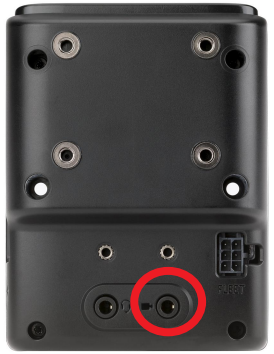

VIDEO PORT
Easy connection

* Rear-view camera compatibility is subject to camera models. Tested with popular camera models (e.g. Axion cameras with adapter from cinch or Mini DIN to 3.5mm jack).

Powerful integration via SDKs

- Versatile and ready-built SDKs are available to develop custom apps for PRO 8475.

PRO.connect SDK	NavApp SDK	Map Library SDK
Integration of professional order workflow functionalities	Integration of professional TomTom navigation workflows	Integration of professional TomTom map views

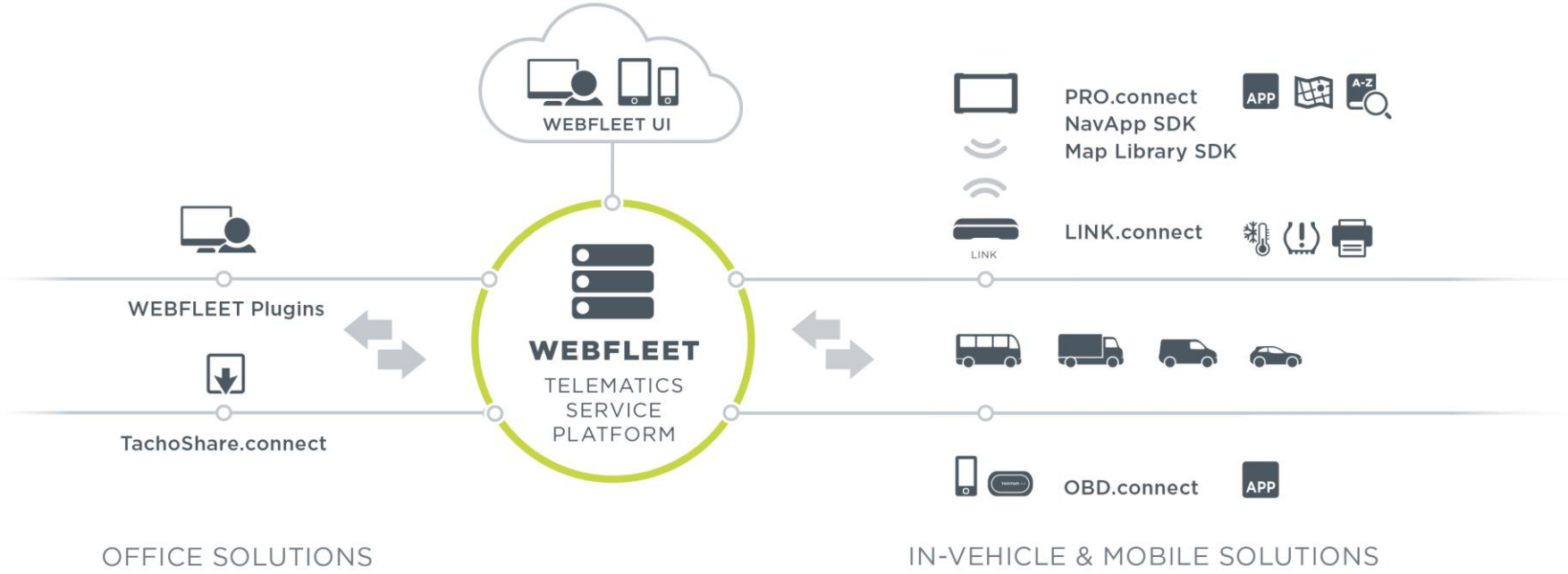

Wefleet Solutions App Center

- Choose from hundreds of fit-for-purpose apps available in the Wefleet Solutions App Center
- Make use of wireless data connectivity, built-in camera and microphones, NFC, USB and more

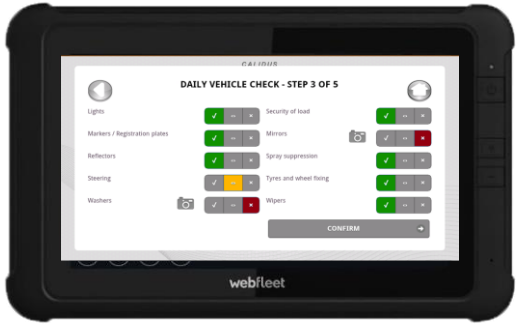

Vehicle checks
Example VeHUB

- Vehicle checks
- Defect recording
- Photo capture
- Accident reporting
- Trailer/asset scanning

Data capture
Example INKWRX

- Custom forms
- Integrate into back office systems
- Barcode scanning
- Signature capture

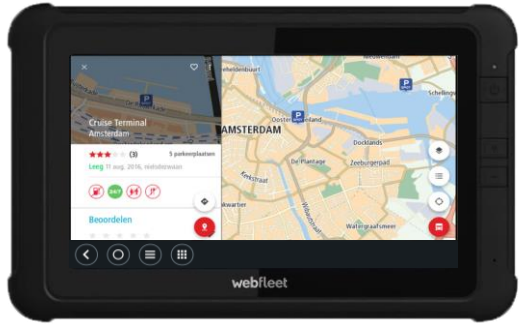

Driver assistance
Example Truck Parking Europe

- Search EU-wide for truck stops
- Dedicated truck rest areas
- Community input providing real-time data and user reviews

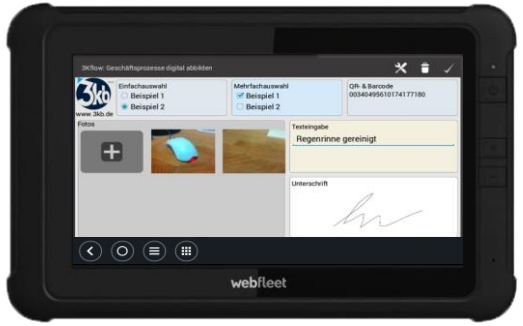

Workflow
Example 3Kflow

- Multiple interactive elements
- Question paths guide you through data capture
- Real-time two-way messaging i.e. for status updates
- Bespoke business workflow

Wefleet Solutions App Center

- Software categories:

Asset management	Billing / Invoicing	Communication
CRM/ ERP	Dispatching / Workflow	Driving performance
Fuel cards	integration.Wefleet.com	Load / Vehicle weight
Mobile Worker Applications	Planning / Scheduling	Reporting
Route optimisation	Vehicle maintenance	Working hours / salary

Manage and control: MDM

- MDM (Mobile Device Manager) comes free of charge as part of the Wefleet subscription
- Easy management of PRO 8475
  - Remote updates of firmware, maps, apps, content and configuration via Wefleet Solutions server
  - Full device control and device configuration
  - Pre-defined content of all devices per account
  - Less development effort for partners
  - Fast deployment of content in the field
- MDM User Guide is available in Knowledge Base

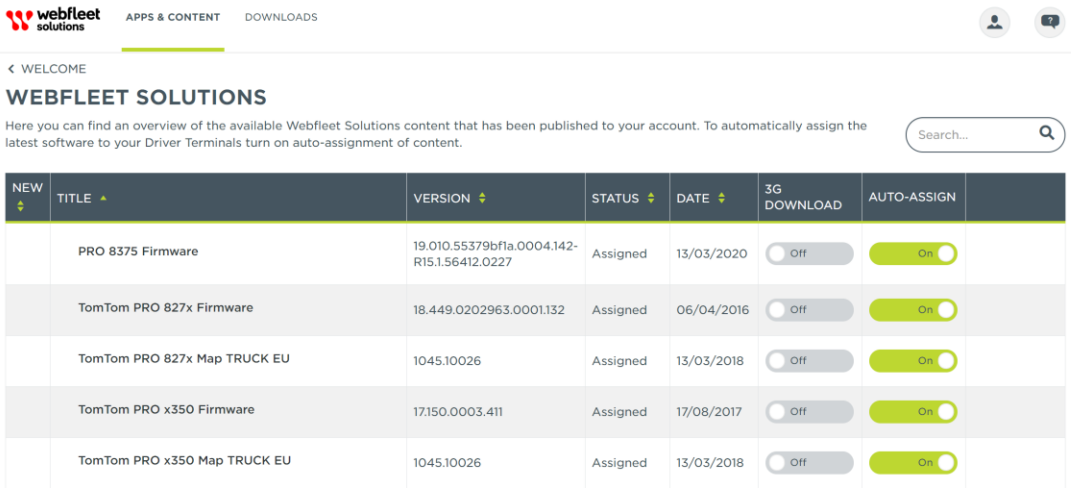

Manage and control: User profiles

- PRO 8475 offers two different user profile types that allow businesses to customise the user rights according to their needs.

- **Owner**
  - Profile with full rights
  - Usually used by the fleet manager
  - Usually protected with a PIN lock

- **Restricted user**
  - Profile with limited rights
  - Usually used by the driver
  - No access to Google Play
  - Possible restrictions:
    - Limited app access (e.g. no access to browser or messages)
    - Limited settings access (e.g. no connection settings)
    - Limited functionality (e.g. no app installations via SD cards)
    - And more

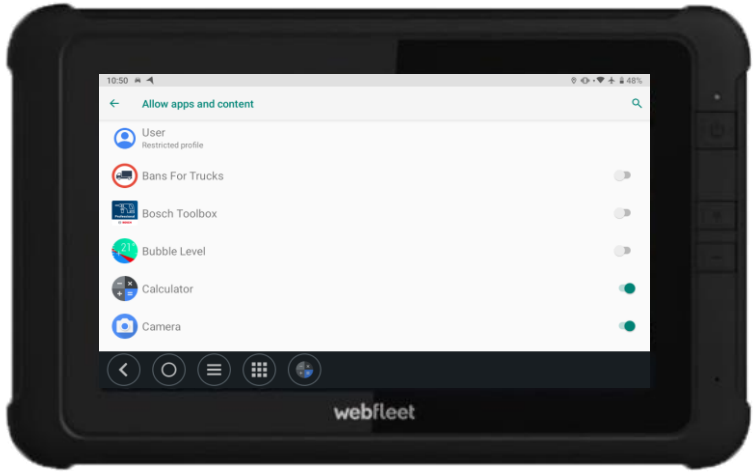

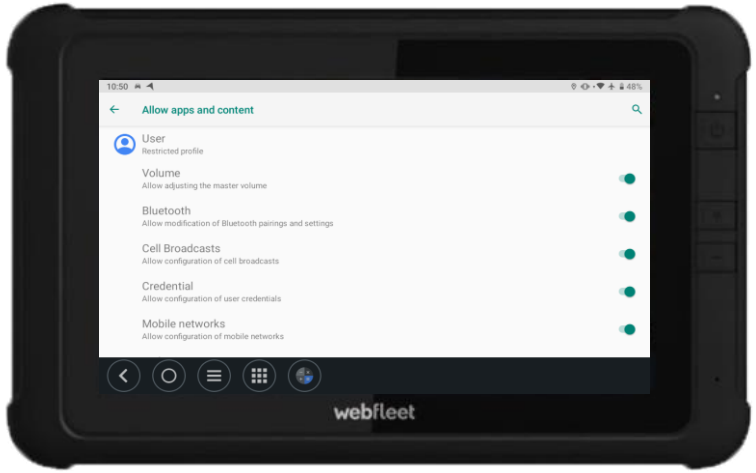

Standalone features when not using Wefleet

PRO 8475 can also be used without Wefleet. Customer then get a **ruggedised Android tablet** with all the benefits of **Google Services** and **professional TomTom navigation**.

- TomTom navigation
  - Preinstalled offline maps for car/truck routing and LIVE services (via customer's SIM card, hotspot or tethering)
  - Over-the-air updates pushed onto the device (Wefleet Solutions provides quaterly updates)
- Third-party apps
  - Google Play Store for access to Android apps (Alternative: custom *.apk files can be "side-loaded", e.g. via microSD card)
- Fully-featured tablet
  - All benefits of Android 9 with Google Services
- Bulk installation and user restrictions
  - Settings backup via computer using "Android Debug Bridge" (ADB). Also, some optional, additional backup functionality is available via Google Drive.
  - Two profiles available: Owner and restricted user. This prevents the user from accessing certain apps and functions (e.g. Google Play Store).
- Customisable home screen
  - The look-and-feel of the device can be customised with Android launchers. Third-party launchers can also be installed.
  - Two quick launch buttons can be defined, creating quick access to important apps.

Recap: Customer benefits

Enhance your customer service

- Get all the apps you need from Google Play Store to manage an effective mobile workforce.
- Digitised workflow connects your field data with back office systems, helping to provide a higher level of service to customers with more accurate ETAs and overall better visibility.

Boost your productivity both inside and outside

- Highly ruggedised design is ready for use under all conditions.
- High-speed processor ensures you are always up to speed in your operation.
- Reduce time spent on administration with automated data logging of working time and mileage.
- Dispatchers can send specific instructions to their drivers and reduce their planning efforts. They can also optimise their orders with one click thanks to Wefleet Order Optimisation (additional feature).

Support drivers to be safer and more efficient

- Active driving behaviour feedback enables more fuel-efficient and safer driving.
- Drivers spend less time on the road and more time with customers thanks to professional navigation.
- Drivers can receive push notifications from business apps thanks to Google Services.

Customise it to suit your business needs

- Access various ready-built apps in the Wefleet Solutions App Center from accredited partners.
- Customise with MDM, user rights, Android apps and a full suite of SDKs.

Requirements and price

- Requirements:
  - Supported Wefleet tariff: NAV/LIVE
  - Compatible LINK devices*: LINK 410/510/530/740
  - Functionality without Wefleet**: See slide 30

- Prices:

	USD	AUD	NZD	ZAR	CLP	MXN
PRO 8475	599.00	795.00	795.00	7,690.00	369,990.00	12,490.00
PRO 8475 TRUCK	649.00	895.00	895.00	—	—	—
PRO 84xx Hand Strap	9.95	15.00	16.00	145.00	6,990.00	195.00
PRO 84xx/82xx Power Cable Adapter	12.95	20.00	21.00	185.00	8,990.00	255.00
PRO 84xx Fastening Clips	4,95	7,00	8,00	70,00	3.490,00	95,00
PRO 8xxx Windshield Mount	12.95	20.00	21.00	185.00	8,990.00	255.00
PRO 8xxx Car Charger	12.95	20.00	21.00	185.00	8,990.00	255.00
PRO 84xx Cradle (Replacement)	49.95	75.00	81.00	725.00	34,990.00	995.00
PRO 84xx Fleet Cable (Replacement)	12.95	20.00	21.00	185.00	8,990.00	255.00

* Not all LINK models are available in all regions.
** If used without a LINK device, an active SIM card with data connection is required to receive TomTom Services (Maps/Traffic/Speed Cameras).

Specifications

OS	NEW Android™ 9 with Google Mobile Services (GMS)
CPU	NEW Qualcomm® Snapdragon™ Octa-core 1.8 GHz, 64-bit
GPU	NEW Qualcomm® Adreno™ 506 GPU, OpenGLS ES 3.1+ AEP
Connectivity*	LTE (NEW Category 6 up to 300 Mbit/s), microSIM (optional) Support of 3G / 2G fallback NEW lockable SIM card slot
Screen	7'' (17.7 cm), 85° viewing angles, 1024 × 600 NEW Special anti-reflective and matte finish (AG-etched) Multi-touch IPS, High brightness (630 nits) Glove support, Optical bonding
GNSS	GPS (incl. AGPS) and GLONASS Dual-antenna mode for enhanced accuracy Qualcomm iZat accelerated location technology
Wi-Fi®	NEW 802.11ac Wave 2, 802.11a/b/g/n, 2.4 GHz & 5 GHz Support of Wi-Fi Direct and MU-MIMO
Bluetooth®	NEW Bluetooth 4.2 (incl. Bluetooth Low-Energy)
Storage	32 GB ROM / 2 GB RAM
Camera	8 MP (with flash and two microphones)
Protection	Drop-protected 1.5m (MIL-STD-810G) Shock-protected 20G (SAE-J1455) Scratch/break resistance (hardness 6H+) Dust-protected (IP5x) Water-protected (IPx4) Vibration-protected (SAE-J1455) UV-resistant

Sensors	Accelerometer, Ambient light, Temperature, Vibration NEW Electronic Compass, NEW Gyroscope
Memory card slot	microSDHC/XC, up to 128 GB, FAT32 NEW lockable SD card slot
Storage temperature	-30°C/-22°F – 70°C/158°F
Operation temperature	-20°C/-4°F – 60°C/140°F (with AC)
Battery	4000 mAh (up to 10h) + backup battery 10W charging
Near field communication	NFC: MiFare and Felica RFID (HF): ISO 14443 A & B, ISO 15693
Ports (device)	18-pin pogo pin connector, NEW USB Type-C (incl. host)
Ports (cradle)	2 × 3.5mm (video + audio), USB host, NEW USB Type-C, FLEET port (vehicle power connection)
Dimensions (device)	213.8 mm (L) × 133.4 mm (W) × 23.0 mm (H) Weight: 475 g
Dimensions (cradle)	74.4 mm (L) × 97.6 mm (W) × 43.0 mm (H) Weight: 170 g

* Connectivity: Overview of LTE/3G/2G bands:

Version 1 (Europe, Australia, Africa, South America)
- LTE bands: 1 (2100 MHz), 2 (1900 MHz), 3 (1800 MHz), 4 (1700 MHz), 5 (850 MHz), 7 (2600 MHz), 8 (900 MHz), 20 (800 MHz), 28 (700 MHz)
- WCDMA bands: 1 (2100 MHz), 2 (1900 MHz), 4 (1700 MHz), 5 (850 MHz), 8 (900 MHz)
- GSM: 850 MHz, 900 MHz, 1800 MHz, 1900 MHz

Version 2 (North America incl. Mexico)
- LTE bands: 2 (1900 MHz), 4 (1700 MHz), 5 (850 MHz), 7 (2600 MHz), 12 (700 MHz), 13 (700 MHz), 14 (700 MHz), 17 (700 MHz), 25 (1900 MHz), 26 (850 MHz), 66 (1700 MHz), 71 (600 MHz)
- WCDMA bands: 2 (1900 MHz), 4 (1700 MHz), 5 (850 MHz)

What’s in the box?

PRO 8475

Cradle

Cables

1) USB Type-C
2) FLEET

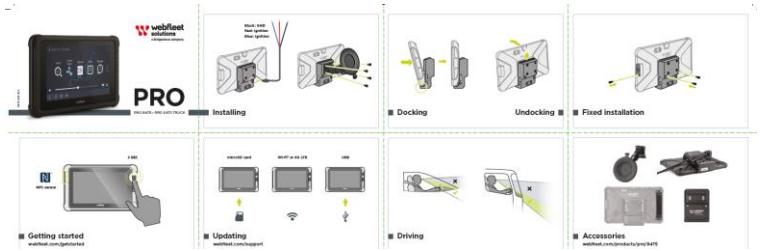

Quick Start Guide

Screws

1) Screws (TORX) to lock SIM/SD slot
2) Screws (×) to attach AMPS mount
3) Screws (×) for fixed installation

Compatible accessories

Hand strap	• Hold the device easily • One-handed mode • Combinable with cradle
Windshield mount and car charger	• Mounts on the windshield • Popular “AMPS” (38mm × 30mm) standard
Fastening clips	• Prevents the unintentional disconnection of cables from the cradle • Fixes up to five cables
PRO 82XX power cable adapter	• Connects power cables of PRO 8275/8270 to the PRO 8475 cradle to save time and cost in case of upgrade
Other accessories	• Out-of-car bundle • Cradle (replacement) • Fleet cable (replacement)
Hand strap	• Hold the device easily • One-handed mode • Combinable with cradle

Reuse power connection of PRO 8275 or BRIDGE

PRO 8275/TomTom BRIDGE power plug

Existing power cables of the PRO 8275/8270 or TomTom BRIDGE are plugged in here.

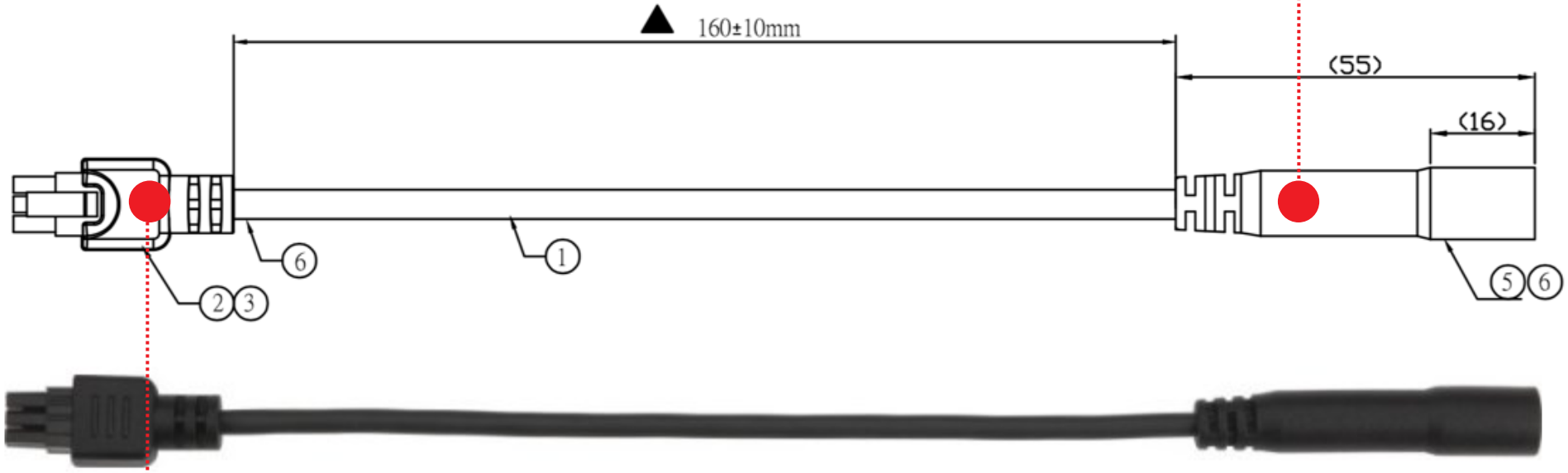

PRO 8475 power plug

This end gets plugged into the cradle of PRO 8475.

Advantages over PRO 8275 and PRO 8375

- PRO 8475 keeps the same well-known processes as PRO 8275/8375, while enhancing in key areas:

Android 9 with Google Services
- Google Play Store (incl. Play Protect)
- Support for push notifications for apps
- Google apps (Maps, Gmail, Chrome, etc.)

Future-proof connectivity
- LTE cat. 6 modem
- Wide NFC standards, Wi-Fi ac, Bluetooth 4.2 LE
- Voice calls supported (e.g. Skype, Telegram)

Better outdoor capabilities
- Long battery life up to 10 hours
- Superior ruggedness
- Bright screen and fit-for-purpose accessories

High-quality screen
- Brighter (630 nits) with bigger viewing angles (85°)
- New anti-reflective and anti-fingerprint finish
- High-sensitivity mode for glove support

More performance and storage
- Qualcomm® Snapdragon™ Octa-core 1.8 GHz, 64-bit
- 32GB ROM + 2GB RAM
- Up to 3x higher performance

More versatile cradle
- Two 3.5mm jacks (1x video, 1x audio)
- USB host (e.g. for flash drives, scanners or printers)
- Fixed installation via included screws

And much more (see slide 33)

How to update the PRO 8475

Wi-Fi	LTE	microSD	USB
PRO 8475 can be updated directly using Wi-Fi.	PRO 8475 can be updated directly using LTE data network.*	Software updates and maps will be made available as a ZIP file in the MDM and Partner Portal.	Software updates and maps will be made available as a ZIP file in the MDM and Partner Portal.
• Via Software Update app • Only for content configured via MDM	• Via Software Update app • Only for content configured via MDM	• Recommended for bulk updates	• Recommended for bulk updates
• Simple process for single devices	• Simple deployment for smaller files	• Single download for the entire fleet • Parallel updates supported	• Single download for the entire fleet • Parallel updates supported
• In-field update possible	• In-field update possible	• In-field update possible	• In-field update possible

* Data connectivity is not included – requires microSIM for LTE data connections.

Q&A Google Services

- How do customers benefit from Google Services?
  1. Customers want to use third-party apps that make use of **push notifications.**
  2. Customers want to allow or prevent downloads of third-party apps from the **Play Store.**
  3. Customers want to use the **Google apps** (Chrome, Google Maps, Gmail, Google Docs, Google Drive, etc.).
  4. Customers want to use third-party apps that make use of the **Google Maps API and other standard APIs.**
  5. Customers want to benefit from the **enhanced security mechanisms** of Play Protect, such as malware detection.

- Do users need to log into a Google account to benefit from Google services?
  - No, a Google account is not required for push notifications, Google apps and Google Maps API.
  - Yes, a Google account is required for using the Play Store (Note: restricted users cannot access the Google Play Store).

- Are there any implications of logging into a Google account regarding the MDM?
  - No. Apps can still be distributed via the Wefleet Solutions MDM, even if they are available on the Play Store.

- Are customers forced to log into a Google account during the initial device setup?
  - No, a Google login is not part of the initial device setup.

PRO series comparison

NEW

	PRO 2020	PRO 5350	PRO 7350	PRO 8275	PRO 8375	PRO 8475
Screen	2.5 inch	5 inch	5 inch	7 inch	7 inch (high-quality)	7 inch (top-of-the-line)
Fixed-installed vehicle tracking (via LINK)	✓	Portable tracking	✓	✓	✓	✓
Driver registration	✓ (ID card)	✓ (PIN)	✓ (PIN)	✓ (PIN/ID card[4])	✓ (PIN/ID card[4])	✓ (PIN/ID card[4])
TomTom navigation and traffic*		✓ (TRUCK[1])	✓ (TRUCK[1])	✓ (TRUCK[1])	✓ (TRUCK[1])	✓ (TRUCK[1])
Working time and Logbook	✓	✓	✓	✓	✓	✓
Order management and messages		✓	✓	✓	✓	✓
Updates over-the-air		✓ (Wi-Fi)	✓ (Wi-Fi)	✓ (Wi-Fi or 3G)	✓ (Wi-Fi or LTE)	✓ (Wi-Fi or LTE)
Active driving behaviour feedback	✓		✓	✓	✓	✓
Android OS				✓ (Android 6)	✓ (Android 6)	✓ (Android 9)
Google Services (Play Store, Push notifications, G-Apps)						✓
MDM and platform control				✓	✓	✓
Rear-view camera support				✓ [2]	✓ [2]	✓ [2]
NFC/RFID	✓			✓	✓	✓
Integrated modem		✓ (2G GSM)		✓ (3G UMTS) [3]	✓ (LTE) [3]	✓ (LTE cat. 6) [3]
Camera and flash				✓ (5 MP)	✓ (8 MP + 2 microphones)	✓ (8 MP + 2 microphones)
Ruggedised housing				✓	✓	✓ (top-of-the-line)
Advanced sensors (e.g. gyroscope, compass)						✓
Versatile cradle with many ports					✓	✓

[1] TRUCK version provides large-vehicle navigation and POIs.
[2] Rear-view camera compatibility is subject to camera models.
[3] Data connectivity is not included. It requires SIM card for data connections.
[4] Driver registration via ID card possible via third-party applications.

BRIDGESTONE

Solutions for your journey

Copyright © Bridgestone Corporation