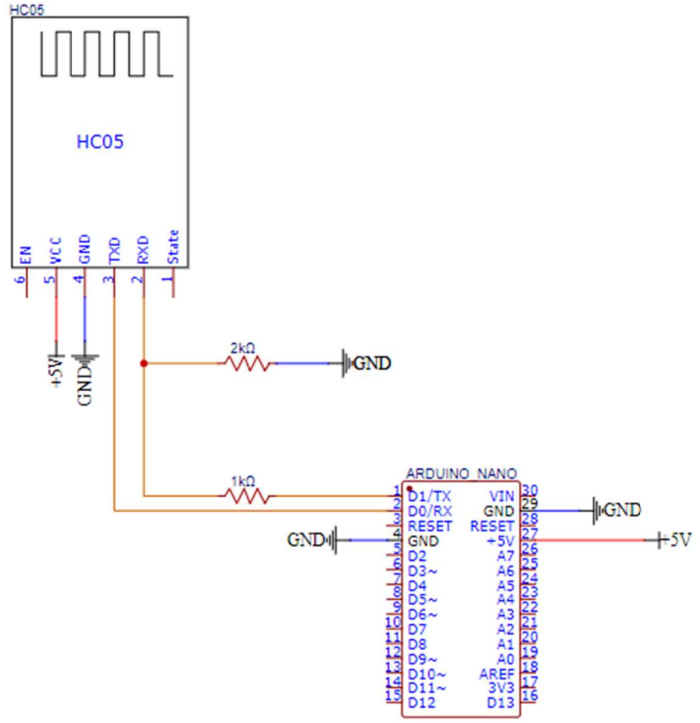

TITLE: Line follower - elektrisch schema		REV: 1.0
嘉立创EDA	Company: Hogeschool Gent	Sheet: 1/1
	Date: 2022-10-13 Drawn By: Kilian De Ruyck	