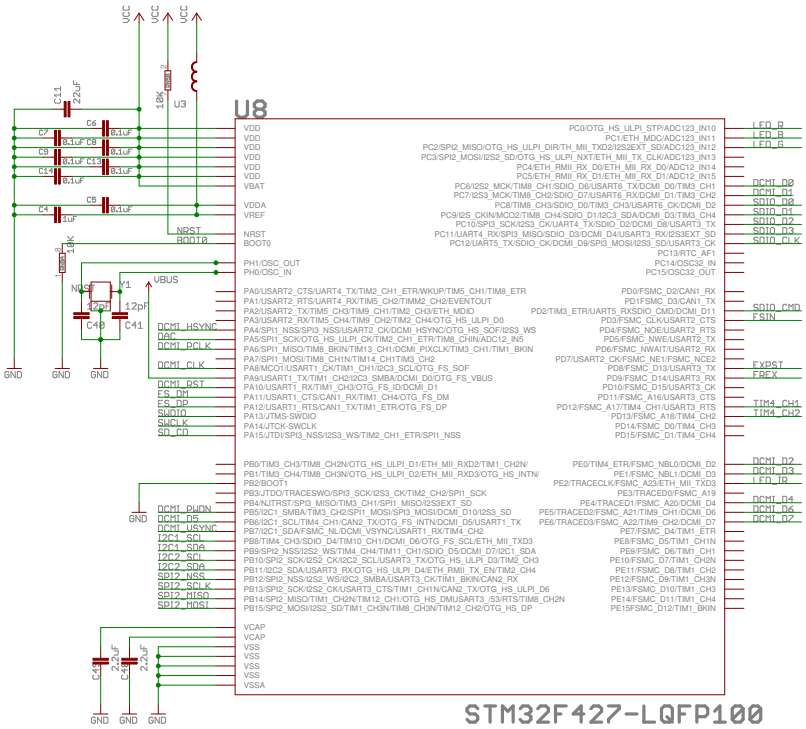

PC13, PC14, PC15 and PI8 limited to 3mA/2MHz

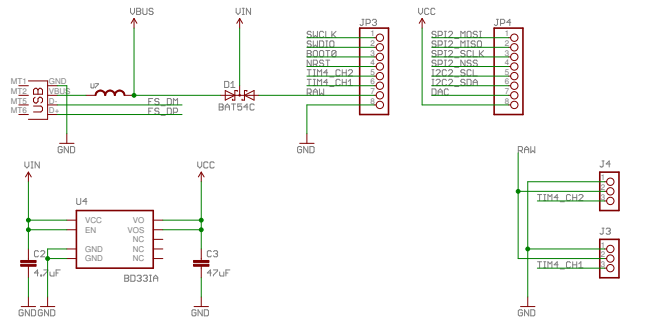

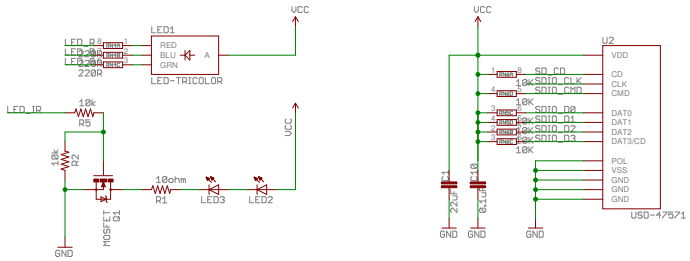

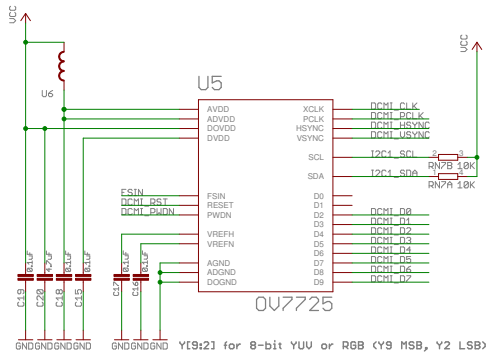

Y[9:2] for 8-bit YUV or RGB (Y9 MSB, Y2 LSB)

DVDD not connected, using internal regulator

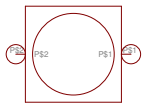

H6 MOUNT-PAD-ROUND2.8

H2 MOUNT-PAD-ROUND2.8

TITLE: openmv2	
Document Number:	REV: 2
Date: 2/10/16 12:57 AM	Sheet: 1/1

Copyright (c) 2013 Ibrahim Abd Elkader <i.abdalkader@gmail.com>
This work is licensed under the Creative Commons Attribution-ShareAlike 3.0 License.
To view a copy of this license, visit http://creativecommons.org/licenses/by-sa/3.0/