MODEL NO.	PJ-002A-SMT
SCHEMATIC	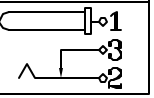

SPECIFICATIONS
RATING: 16V DC @ 2.5A
CONTACT RESISTANCE: 30m OHMS MAX
INSULATION RESISTANCE: 50M OHMS MIN: 500V DC
VOLTAGE WITHSTAND: 500 VAC R.M.S. FOR 1 MINUTE
LIFE: 5,000 CYCLES MIN

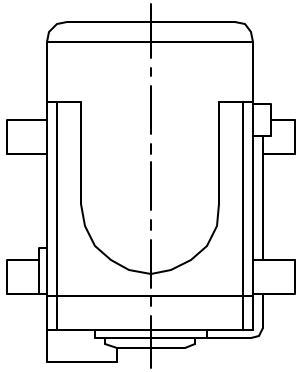

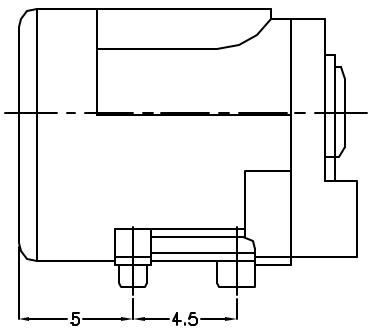

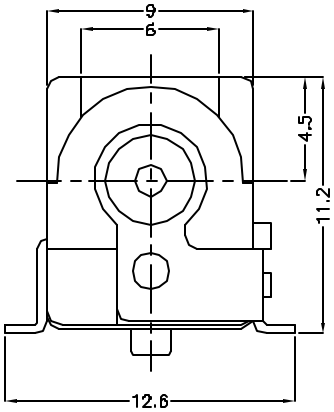

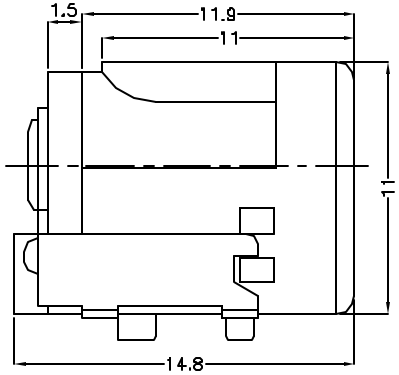

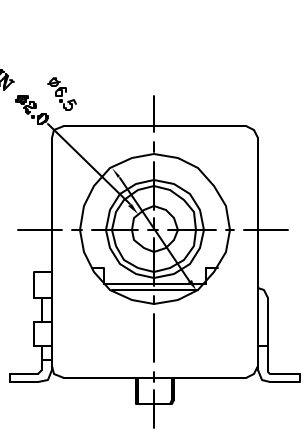

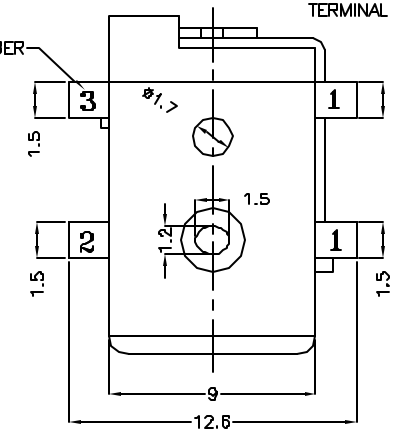

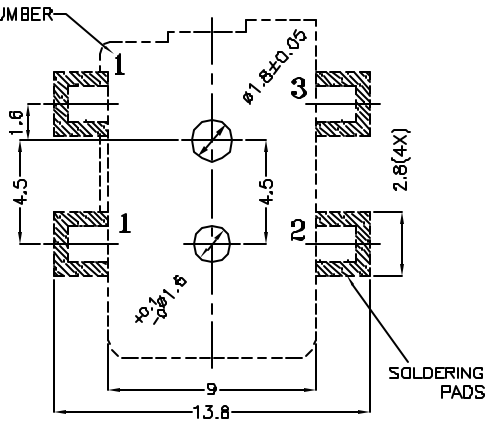

PCB LAYOUT
(TOP VIEW)

MATERIALS
CENTER PIN: BRASS-NICKEL PLATING
TERMINAL-1: BRASS-SILVER PLATING
TERMINAL-2: COPPER ALLOY-SILVER PLATING
TERMINAL-3: BRASS-SILVER PLATING
COVER: PA66 (POLYAMIDE)
HOUSING: PA66 (POLYAMIDE)

CUI INC
9615 SW Allen, Suite 103
Beaverton, OR 97005
Phone: (503) 643-4899
800-275-4899
Fax: (503) 372-1266
Website: www.cui.com

TITLE: 2.0mm SURFACE MOUNT POWER JACK

PART NO.	UNITS:
PJ-002A-SMT	Millimeters

DRAWN BY:	APPROVED BY:	SCALE:
Todd R. White		3X

PC FILE NAME: PJ002ASM.DWG

COPYRIGHT 1999 BY CUI INC.