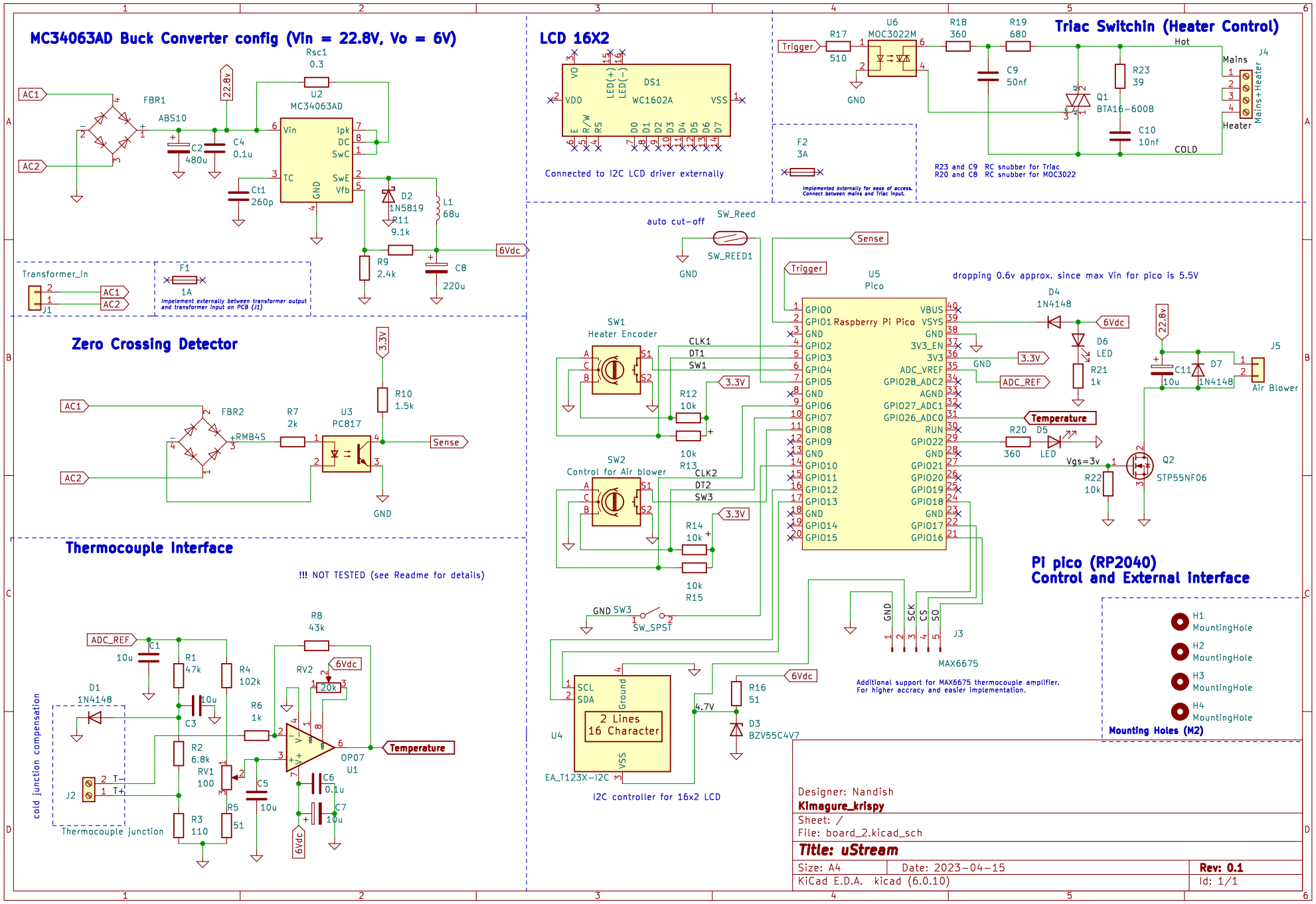
MC34063AD Buck Converter config (Vin = 22.8V, Vo = 6V)
Rsc1
0.3
U2
MC34063AD
AC1
AC2
FBR1
ABS10
22.8v
C2
480u
C4
0.1u
Ct1
260p
Vin
Ipk
DC
SwC
TC
GND
SwE
Vfb
D2
1N5819
R11
9.1k
L1
68u
R9
2.4k
C8
220u
6Vdc
Transformer_In
J1
F1
1A
Impelement externally between transformer output and transformer input on PCB (J1)
LCD 16X2
DS1
WC1602A
VO
VDD
VSS
LED(+)
LED(-)
E
R/W
RS
D0
D1
D2
D3
D4
D5
D6
D7
Connected to I2C LCD driver externally
Triac Switchin (Heater Control)
Trigger
R17
510
U6
MOC3022M
R18
360
R19
680
C9
50nf
Q1
BTA16-600B
R23
39
C10
10nf
Hot
Mains
J4
Mains+Heater
Heater
COLD
F2
3A
Implemented externally for ease of access. Connect between mains and Triac Input.
R23 and C9 RC snubber for Triac
R20 and C8 RC snubber for MOC3022
Zero Crossing Detector
3.3V
R10
1.5k
FBR2
+RMB4S
R7
2k
U3
PC817
Sense
GND
Thermocouple Interface
!!! NOT TESTED (see Readme for details)
ADC_REF
C1
10u
R1
47k
R4
102k
D1
1N4148
C3
10u
R6
1k
R2
6.8k
RV1
100
R3
110
R5
51
J2
T-
T+
cold junction compensation
Thermocouple junction
R8
43k
RV2
20k
6Vdc
OP07
U1
Temperature
C5
10u
C6
0.1u
C7
10u
auto cut-off
SW_Reed
SW_REED1
SW1
Heater Encoder
CLK1
DT1
SW1
R12
10k
R13
10k
SW2
Control for Air blower
CLK2
DT2
SW3
R14
10k
R15
10k
SW3
SW_SPST
U5
Pico
Raspberry Pi Pico
GPIO0
GPIO1
GPIO2
GPIO3
GPIO4
GPIO5
GPIO6
GPIO7
GPIO8
GPIO9
GPIO10
GPIO11
GPIO12
GPIO13
GPIO14
GPIO15
VBUS
VSYS
3V3_EN
3V3
ADC_VREF
GPIO28_ADC2
AGND
GPIO27_ADC1
GPIO26_ADC0
RUN
GPIO22
GPIO21
GPIO20
GPIO19
GPIO18
GPIO17
GPIO16
dropping 0.6v approx. since max Vin for pico is 5.5V
D4
1N4148
D6
LED
R21
1k
R20
360
D5
LED
Vgs=3v
R22
10k
Q2
STP55NF06
C11
10u
D7
1N4148
J5
Air Blower
J3
GND
SCK
CS
SO
MAX6675
Additional support for MAX6675 thermocouple amplifier.
For higher accracy and easier implementation.
U4
SCL
SDA
Ground
2 Lines
16 Character
VSS
EA_T123X-I2C
I2C controller for 16x2 LCD
R16
51
4.7V
D3
BZV55C4V7
Pi pico (RP2040)
Control and External interface
H1
MountingHole
H2
MountingHole
H3
MountingHole
H4
MountingHole
Mounting Holes (M2)
Designer: Nandish
Kimagure_krispy
Sheet: /
File: board_2.kicad_sch
Title: uStream
Size: A4
Date: 2023-04-15
Rev: 0.1
KiCad E.D.A. kicad (6.0.10)
Id: 1/1