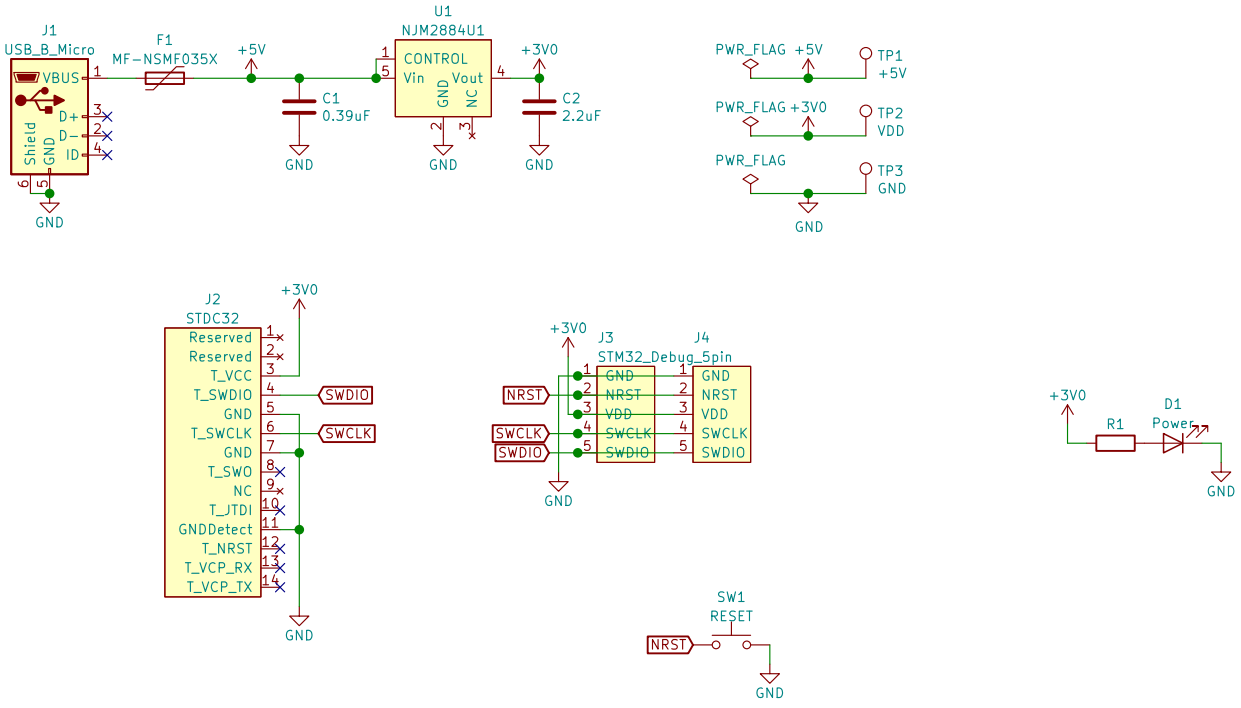

https://github.com/KimiakiK

Sheet: /

File: STM32DebugConnector.sch

Title: STM32 Debug Connector

Size: A4	Date: 2021−03−21	Rev: 2.0
KiCad E.D.A. kicad (5.1.5−0−10_14)		Id: 1/1