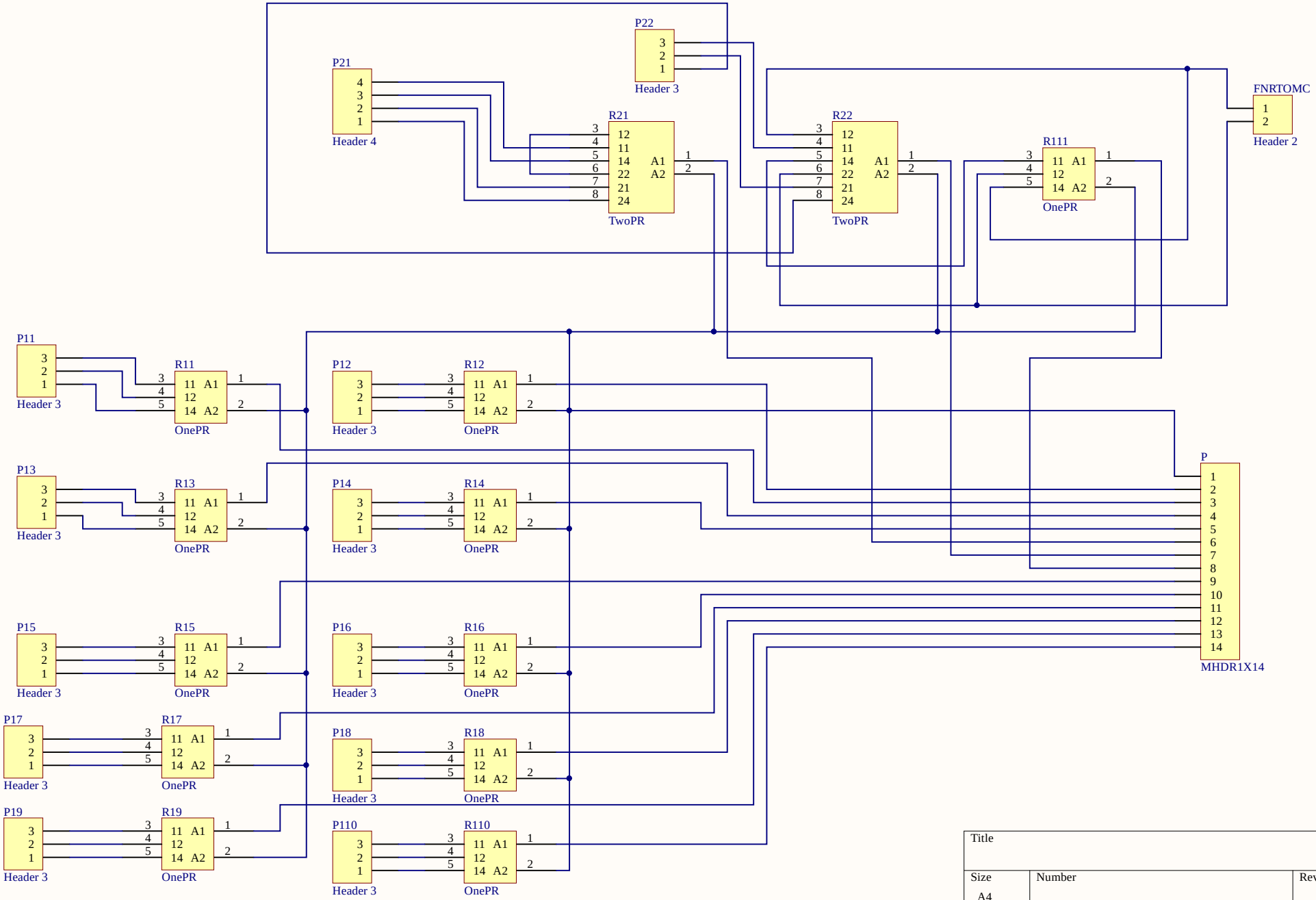

Title		
Size A4	Number	Revision
Date: 7-4-2020		Sheet of
File: C:\Users\..\ElekShemaRelais.SchDoc		Drawn By:

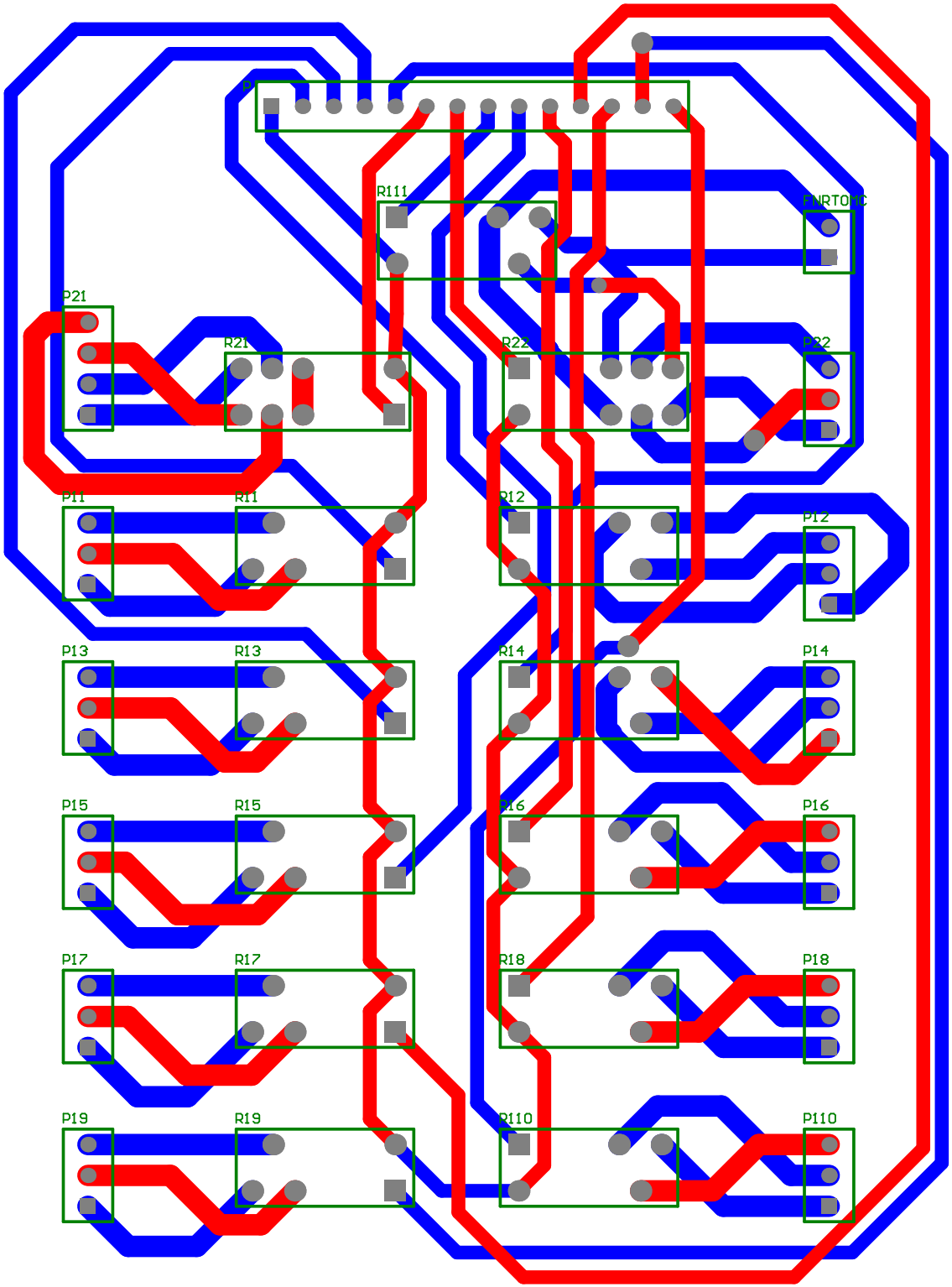
P1
R111
ENRTONIC
P21
R21
R22
P22
P11
R11
R12
P12
P13
R13
R14
P14
P15
R15
R16
P16
P17
R17
R18
P18
P19
R19
P110
P110