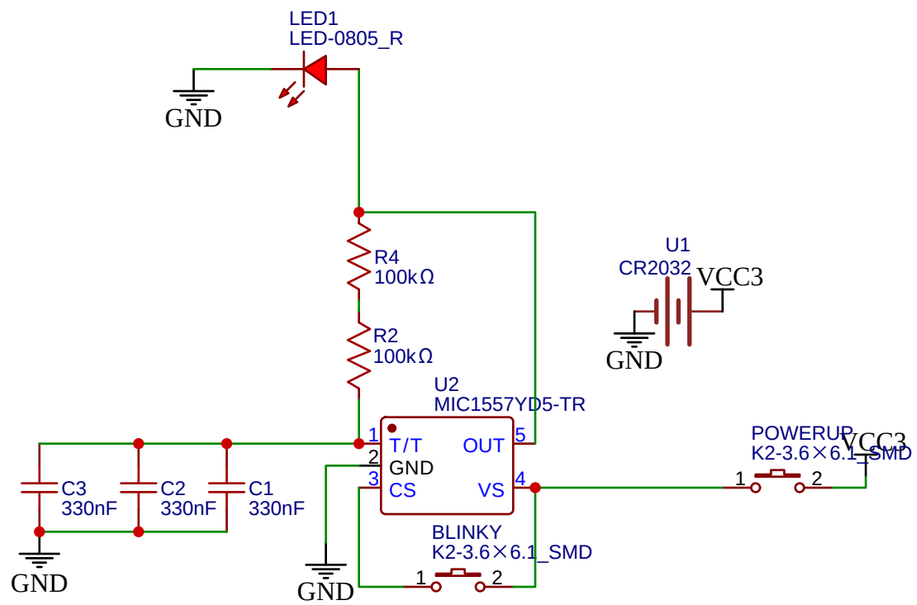

TITLE: circuit		REV: 1.0
嘉立创EDA	Company: hippoCTF	Sheet: 1/1
	Date: 2023-06-05 Drawn By: mediocreReverse	