Week 1 – Layered Network Architecture

Layer	Primary Role	Key Concepts
Transport Layer	Process-to-process communication	Uses port numbers to deliver data to the correct application. Examples include TCP and UDP. Handles reliability, flow control, and multiplexing.
Network Layer	Host-to-host communication	Uses logical addressing (IP) to deliver packets across networks. Responsible for routing decisions and packet forwarding.
Data Link Layer	Node-to-node communication	Uses MAC addresses for delivery on the same physical link. Handles framing, error detection, and medium access control.

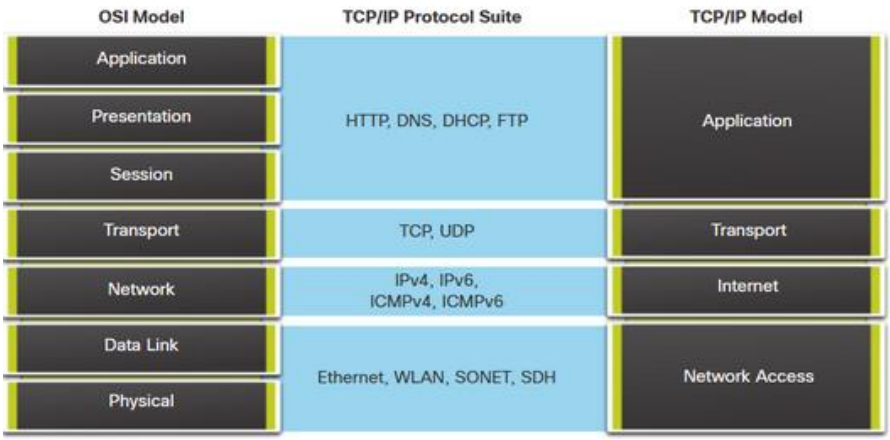

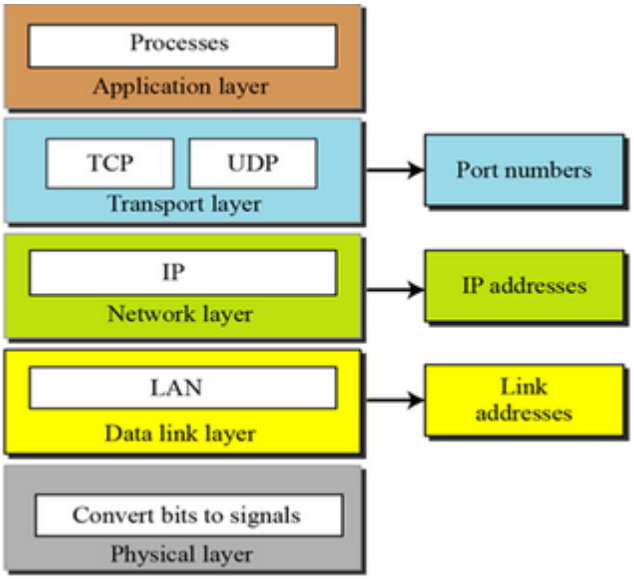

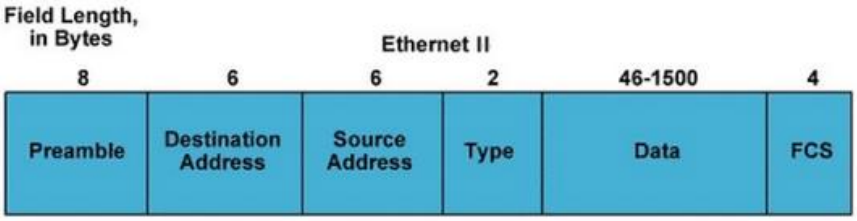

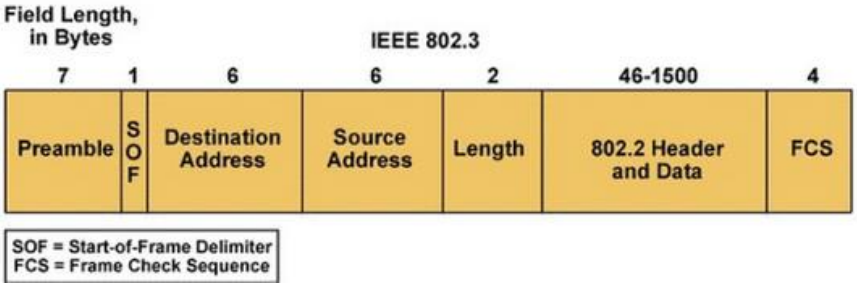

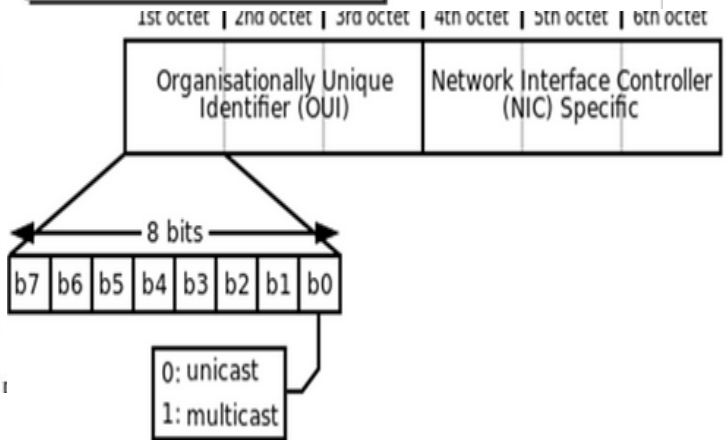

Week 2 – Ethernet & Data Link Layer Concepts

Topic	Key Concepts
Ethernet Frame Size	Minimum payload of 46 bytes ensures CSMA/CD collision detection in early Ethernet. Maximum payload of 1500 bytes chosen for historical cost and fairness reasons. Jumbo frames exist today but standard MTU remains 1500 bytes.
Ethernet II vs IEEE 802.3	Values ≤1500 interpreted as length (IEEE 802.3). Values ≥1536 interpreted as type (Ethernet II). IP traffic uses Ethernet II (e.g. 0x0800).
Ethernet Topology	Modern Ethernet uses star or extended star topology. Hubs create shared collision domains; switches isolate collision domains per port.
MAC Protocol (CSMA/CD)	Required only in half-duplex shared media. Disabled in full-duplex switched Ethernet. Collisions are not expected in modern networks.
Ethernet Multicast Address	Multicast MAC addresses have the least significant bit of the first octet set to 1. Used for one-to-many Layer 2 delivery.
Collision Domain	Area where frames can collide. Reduced by switches; eliminated per switch port.
Broadcast Domain	Area where broadcast frames are received by all nodes. Defined by VLANs and broken by routers or Layer-3 boundaries.

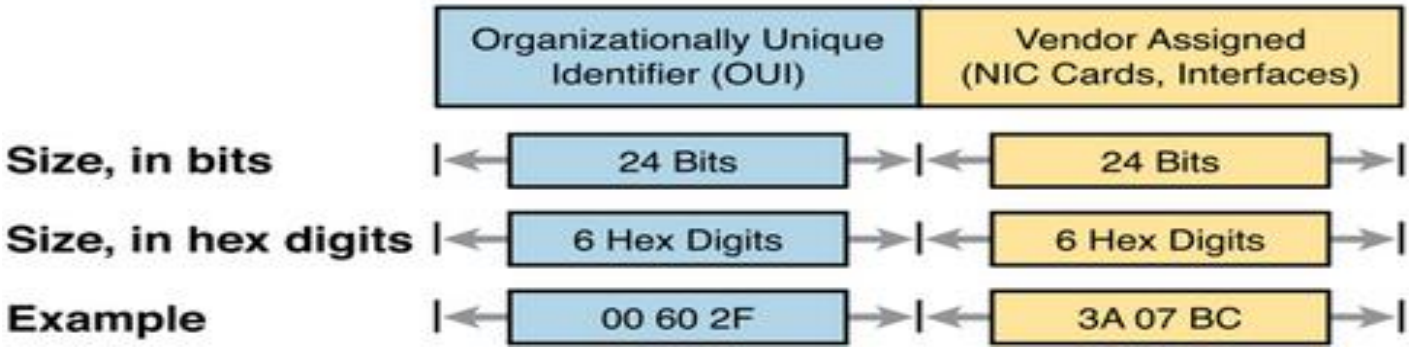

Week 3 – Network Layer & IPv4

Topic	Key Concepts
Core Functions of IP	Addressing identifies hosts, routing determines next hop, fragmentation allows packets to traverse links with smaller MTUs. Reassembly occurs only at the destination.
IP Characteristics	Connectionless, best-effort, no guarantees of delivery, order, or duplication. Reliability handled by higher layers such as TCP.
IPv4 Header – Version & Length	Version field identifies IPv4. Header length specifies header size in multiples of 4 bytes (minimum 20 bytes).
IPv4 Header – TTL	Prevents infinite routing loops by decrementing at each hop. Packet is discarded when TTL reaches zero.
IPv4 Header – Protocol	Identifies upper-layer protocol (ICMP = 0x01, TCP = 0x06, UDP = 0x11).
IPv4 Packet Size	Total length field allows up to 65,536 bytes, but practical size limited by MTU.
IPv4 Address Types	Includes public, private (RFC 1918), loopback, link-local, multicast, and broadcast addresses.

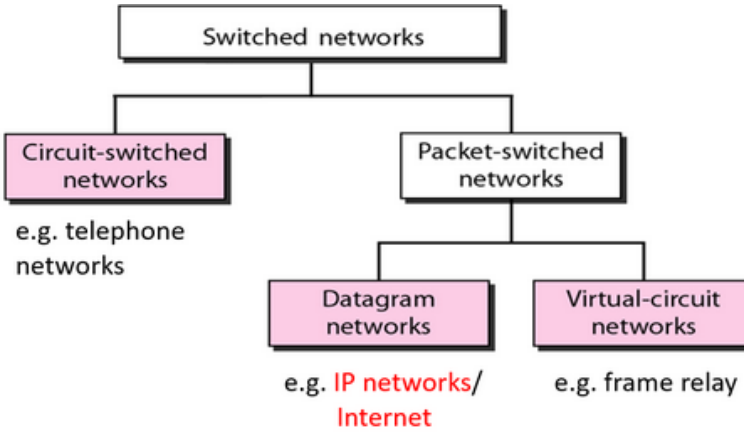

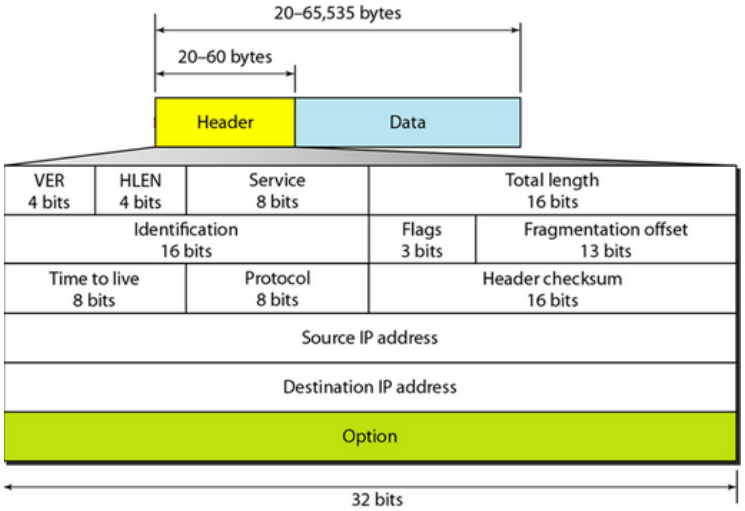

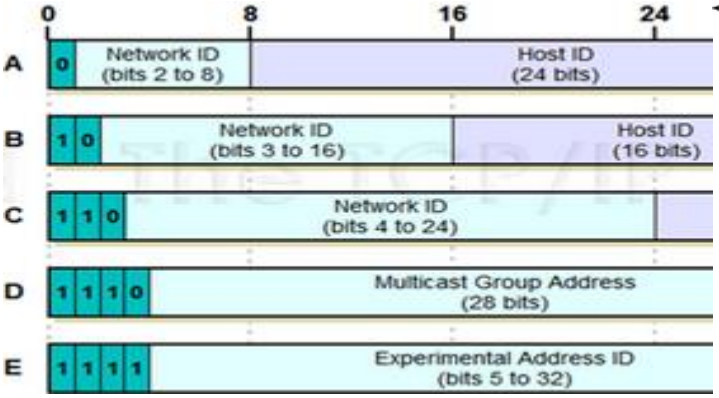

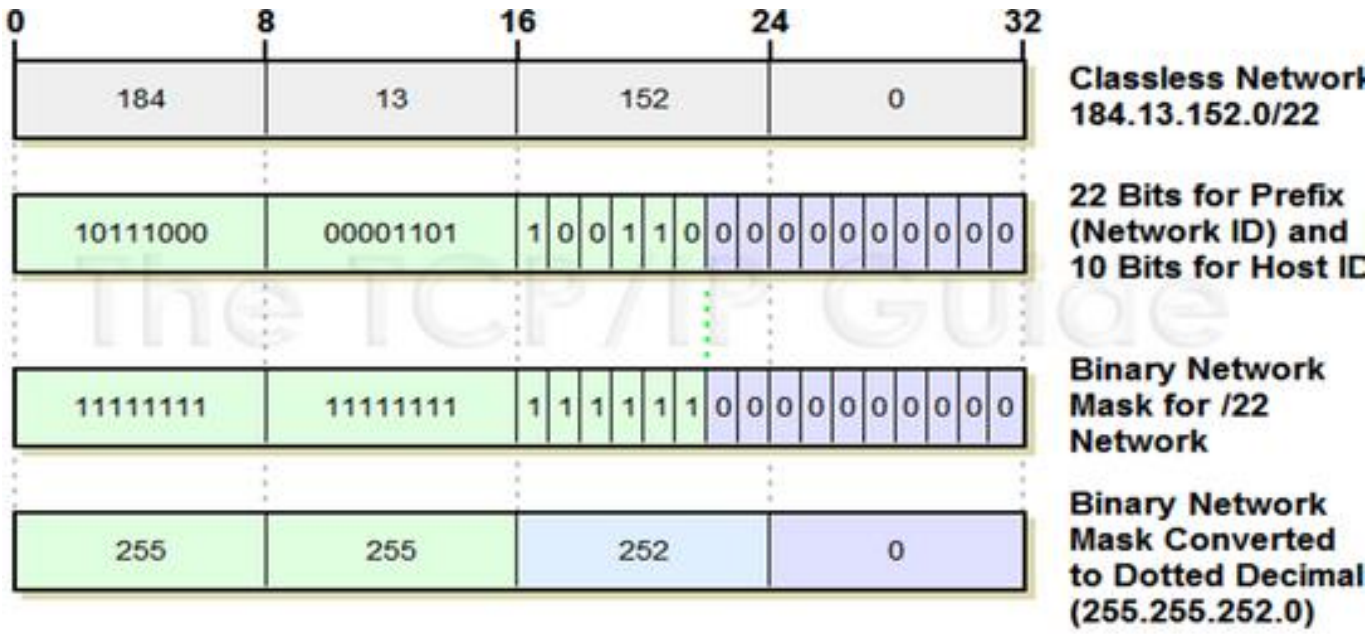

Week 4 – Network Design, VLANs & Inter-VLAN Routing

Topic	Key Concepts
Hierarchical Network Model	Access layer connects end devices. Distribution layer handles routing and policy. Core layer provides high-speed backbone connectivity.
Collapsed Core Design	Combines core and distribution layers. Common in small to medium networks to reduce cost and complexity.
VLAN Concept	VLANs logically segment a network at Layer 2, reducing broadcast domains without changing physical topology.
VLAN Tagging (802.1Q)	Frames are tagged when traversing trunk links. Sending switch inserts tag; receiving switch removes it.
Native VLAN	Allows untagged frames on trunks for backward compatibility. Native VLAN mismatch can cause security and traffic leakage issues.
Access vs Trunk Ports	Access ports carry one VLAN. Trunk ports carry multiple VLANs between switches.
Dynamic Trunking Protocol (DTP)	Dynamic auto waits passively. Dynamic desirable actively negotiates trunking. Best practice is to disable DTP where possible.
Legacy Inter-VLAN Routing	One physical router interface per VLAN. Poor scalability and rarely used today.
Router-on-a-Stick	Single trunk link with router subinterfaces. Cost-effective but limited by router throughput.
Layer-3 Switch Inter-VLAN Routing	Uses SVIs for each VLAN. Fastest and most scalable solution in modern networks.

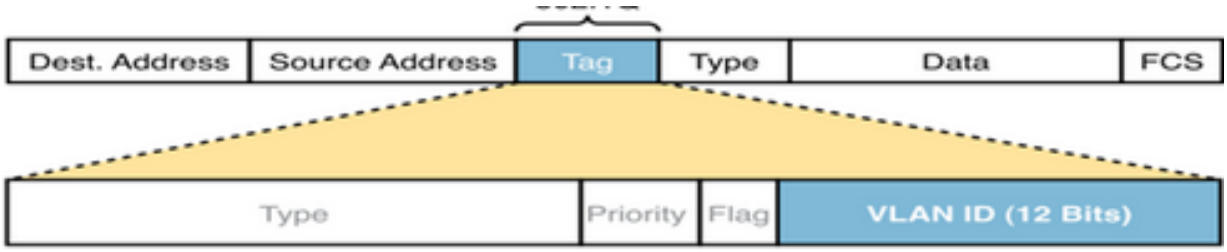

SW1 \ SW2	Access	Dynamic Auto	Trunk	Dynamic Desirable
access	Access	Access	Do Not Use[1]	Access
dynamic auto	Access	Access	Trunk	Trunk
trunk	Do Not Use[1]	Trunk	Trunk	Trunk
dynamic desirable	Access	Trunk	Trunk	Trunk

Week 5 – Address Resolution Protocol (ARP)

Topic	Key Concepts
Purpose of ARP	Resolves an IP address to a MAC address so Layer-3 packets can be delivered on Ethernet.
ARP Request	Broadcast message sent to all devices in the broadcast domain asking for the MAC address of a target IP.
ARP Reply	Unicast response sent by the device that owns the target IP, providing its MAC address.
ARP Packet Structure	Includes hardware type, protocol type, hardware length, protocol length, operation code, sender and target addresses. Same format for request and reply.
ARP Cache	Temporarily stores IP-to-MAC mappings to reduce broadcast traffic. Entries age out over time.
Hop-to-Hop vs End-to-End	MAC addresses change at every hop. IP addresses remain constant from source to destination. Switching is hop-to-hop; routing is end-to-end.

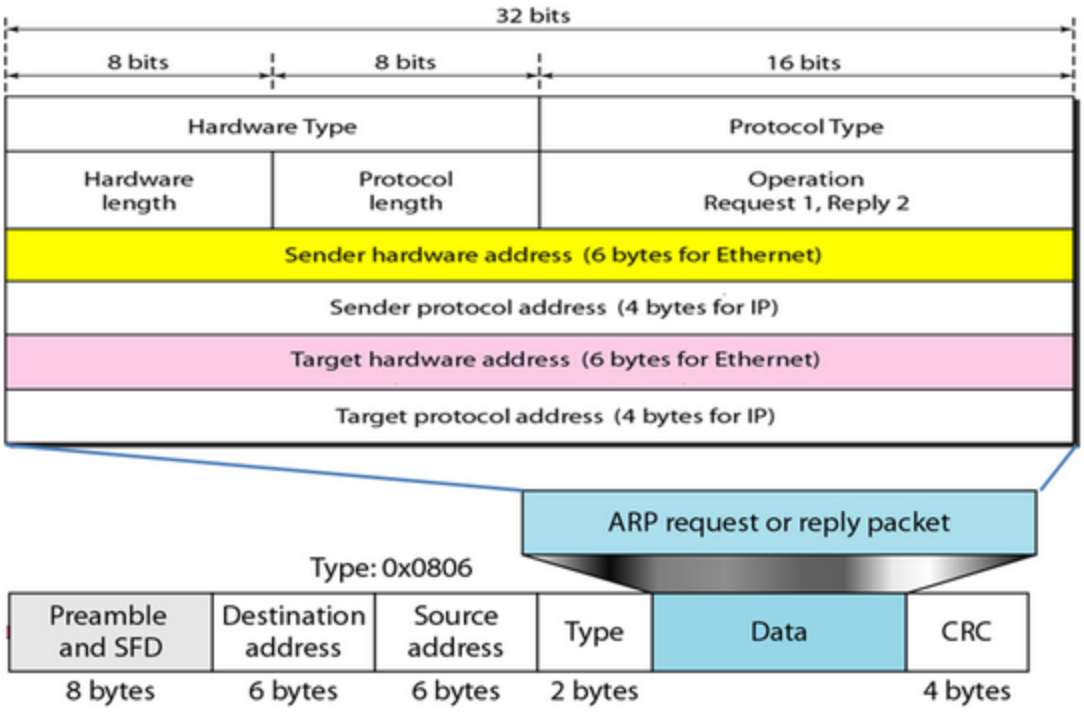
32 bits
8 bits
8 bits
16 bits
Hardware Type
Protocol Type
Hardware length
Protocol length
Operation Request 1, Reply 2
Sender hardware address (6 bytes for Ethernet)
Sender protocol address (4 bytes for IP)
Target hardware address (6 bytes for Ethernet)
Target protocol address (4 bytes for IP)
ARP request or reply packet
Type: 0x0806
Preamble and SFD
Destination address
Source address
Type
Data
CRC
8 bytes
6 bytes
6 bytes
2 bytes
4 bytes

Type of EtherChannel configs

EtherChannel Method	Negotiation?	Standard/Proprietary	Key Notes
Static (Manual)	No	Vendor-specific configuration	Interfaces are manually forced into a channel-group; no protocol checks/negotiation.
PAgP	Yes	**Cisco proprietary**	Uses PAgP to negotiate channel formation; both ends must support PAgP.
LACP	Yes	**IEEE 802.3ad**	Standards-based negotiation; preferred for multi-vendor interoperability.

EtherChannel Type	Typical Topology Use	Interface Mode	What It Carries / How It's Used
Layer 2 EtherChannel	Access ↔ Distribution	**Trunk (switchport)**	VLAN-tagged traffic across multiple VLANs (supports inter-VLAN designs).
Layer 3 EtherChannel	Distribution ↔ Core	**Routed port (no switchport)**	Point-to-point routed connectivity; interfaces behave like router interfaces and can be assigned IP addresses.

Rapid Spanning tree protocol (RSTP)

Election Process

What is Being Elected	Primary Decision Metric	Tie-Breakers (in order)	Resulting Role/Outcome
Root Bridge (Root Switch)	**Lowest Bridge ID (BID)** *(priority + VLAN ID + MAC)*	Lowest **priority** → lowest **MAC address**	One switch becomes **Root** and originates the "best" BPDUs (root info).
Root Port (per non-root switch)	**Lowest total path cost to root**: *(received BPDU root path cost + local interface cost)*	1) Lowest **sender BID** (of received BPDU) → 2) Lowest **sender port priority** (Port ID) → 3) Lowest **sender port number** (Port ID)	Each non-root switch selects **one Root Port** (best upstream path).
Designated Port (per segment/link) and **Alternate Port**	Port that advertises **lower root path cost** (better BPDU)	If cost ties: lower **BID** wins Designated	**Designated** forwards for that segment; the other side becomes **Alternate** and goes **Discarding/Blocking** (loop prevention, standby).

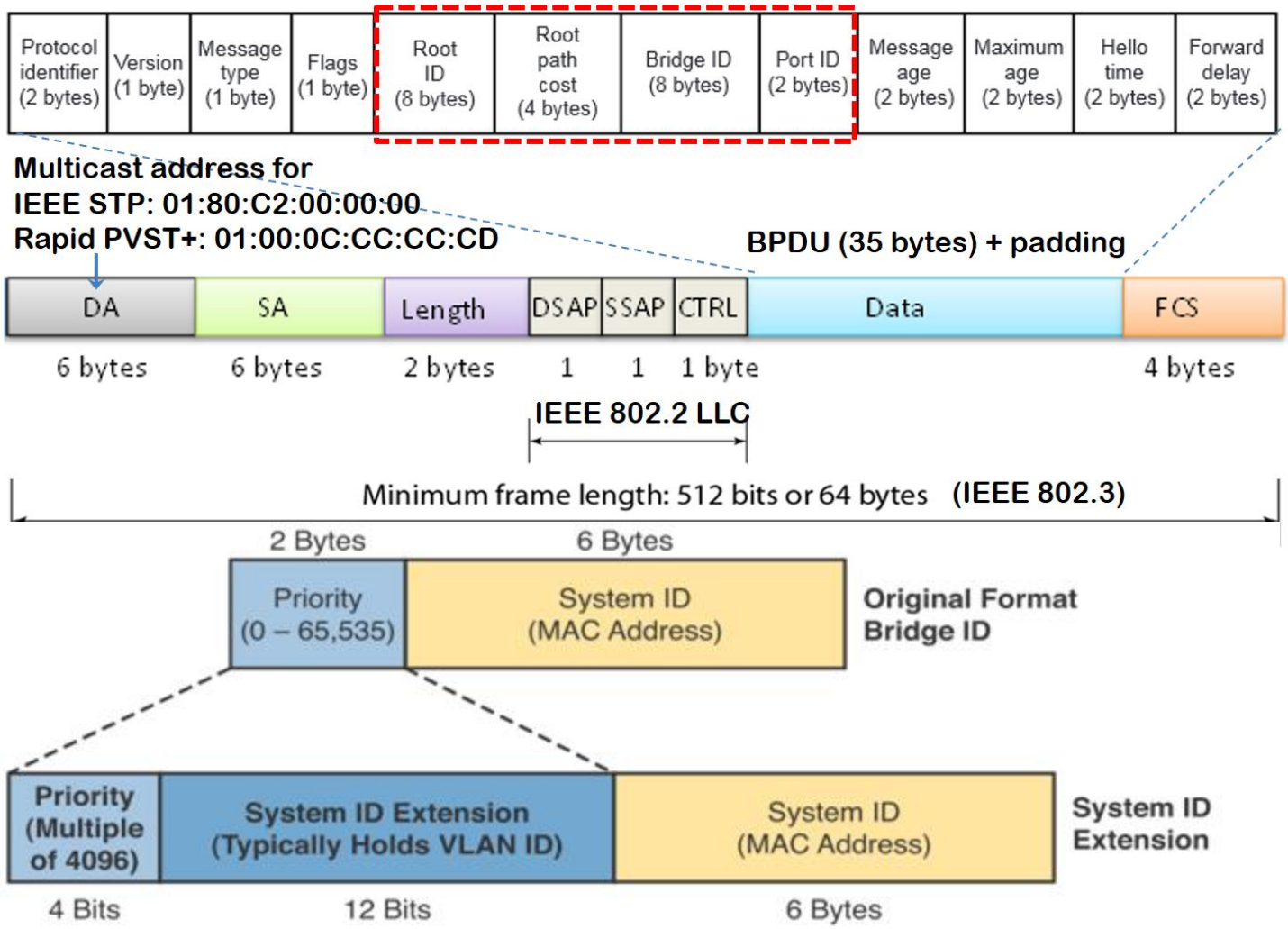

Port Roles

Port Role	Where It Exists	What It Does	Typical State
Root Port (RP)	Non-root switches only	Best path **toward the Root Bridge** (one per non-root switch, per VLAN)	**Forwarding**
Designated Port (DP)	Root + non-root switches	Forwards for a segment; best port **away from root** on that LAN segment	**Forwarding**
Alternate Port (AP)	Non-root switches only	**Backup** path toward root; prevents loops by standing by	**Discarding** *(often shown as BLK)*
Backup Port (BP) *(rare)*	Non-root switches (uncommon)	Backup to a designated port on the **same switch** for the same segment	**Discarding**

Port States

STP (802.1D) States	Closest RSTP (802.1w) Equivalent

Blocking + Listening	Discarding
Learning	Learning
Forwarding	Forwarding
Disabled	(Not a defined RSTP state; effectively non-participating/administratively down)

802.1D State	802.1w State	Forwards Data Frames?	Learns MACs Based on Received Frames?	Transitory or Stable State?
Disabled	Discarding	No	No	Stable
Blocking	Discarding	No	No	Stable
Listening	Not used	No	No	Transitory
Learning	Learning	No	Yes	Transitory
Forwarding	Forwarding	Yes	Yes	Stable

Function	Port Role
Nonroot switch's best path to the root	Root port
Replaces the root port when the root port fails	Alternate port
Switch port designated to forward data frames	Designated port
Port that is administratively disabled	Disabled port

FHRP generic properties

Property	What It Means	Key Notes / Typical Values
Full Name	First-Hop Redundancy Protocol (FHRP)	A *category* of protocols (not a single protocol)
Primary Purpose	Default gateway redundancy	Prevents loss of upstream connectivity if the gateway device/link fails
Network Layer Focus	Layer 3 gateway function (with Layer 2 impact)	Hosts route to a gateway IP; switches forward to a gateway MAC
Core Mechanism	**Virtual gateway identity**	Presents a **Virtual IP (VIP)** (and usually **Virtual MAC (VMAC)**) shared by multiple devices
Host Configuration Model	Hosts point to the **VIP** as default gateway	Hosts do **not** reconfigure during failover
Device Roles	Active/Standby (or Master/Backup)	One forwards traffic; others monitor and are ready to take over (some FHRPs can do load-balancing)
Failover Trigger	Loss of protocol hellos / timers (or tracked object failure)	If the active stops advertising, a standby takes over; many designs also track uplinks
Failover Behavior	Standby assumes VIP/VMAC ownership	Often uses **gratuitous ARP** (or equivalent) so switches relearn the VMAC location quickly
Traffic Forwarding	Usually only the active forwards for that VIP	Depends on protocol: some support per-host/per-flow distribution (e.g., GLBP)
Common Deployment Point	Distribution layer SVI/gateway per VLAN	Frequently used as the default gateway for VLANs in campus designs
Load Sharing Option	Possible, depending on protocol/design	Common method: make different devices active for different VLANs (HSRP/VRRP); or protocol-native (GLBP)
Typical Examples	HSRP, VRRP, GLBP	**HSRP/GLBP** are Cisco; **VRRP** is standards-based
Convergence Goal	Minimal downtime and transparent recovery	Keeps gateway identity stable so users “don’t notice” a gateway failure

HSRP properties

Property	What It Is	Key Values / Notes
Protocol Type	First-Hop Redundancy Protocol (FHRP)	Provides default-gateway redundancy at the first hop
Vendor / Standard	Cisco-proprietary	HSRP is Cisco-specific (commonly deployed on Cisco networks)
Core Concept	Virtual default gateway	Hosts use a **Virtual IP (VIP)** as their default gateway
Virtual IP (VIP)	Shared gateway IP address	Stays the same during failover (no host reconfiguration)
Virtual MAC (VMAC)	MAC address mapped to the VIP	Auto-generated by HSRP; used by hosts/switches at Layer 2
Router Roles	Active / Standby	**Active** forwards gateway traffic; **Standby** monitors and takes over on failure
Failure Detection	Periodic HSRP packets (hellos)	If the active stops sending, standby assumes failure and becomes active
Failover Method	Gratuitous ARP (GARP)	New active sends **unsolicited ARP reply** to claim VIP/VMAC ownership
Switch Table Impact	CAM/MAC table update	Switches relearn **VMAC → new port**, redirecting traffic instantly
Host Impact	Minimal / transparent	Default gateway remains VIP; ARP mapping typically remains consistent
Common Deployment	Distribution layer default gateway for VLANs	Often paired with redundant distribution switches
Load Balancing Approach	Active role split across VLANs	Make one switch active for some VLANs and the other active for others to share load

Week 7

OSPF overview

Item	Key Point	Notes
Protocol type	**Link-state IGP**	Routers learn topology, then compute best paths using **Dijkstra (SPF)**
Version (IPv4)	**OSPFv2**	OSPFv3 is for IPv6 (not covered here)
IP transport	Runs directly over IPv4	IP **Protocol number = 89**
Multicast destinations	**224.0.0.5** (All OSPF routers), **224.0.0.6** (All DR/BDR)	Used for Hello and other OSPF control traffic
Administrative Distance	**110**	Shown in routing table as [110/metric]
Core phases	1) Neighbor discovery 2) Topology exchange 3) SPF calculation	Matches your notes structure

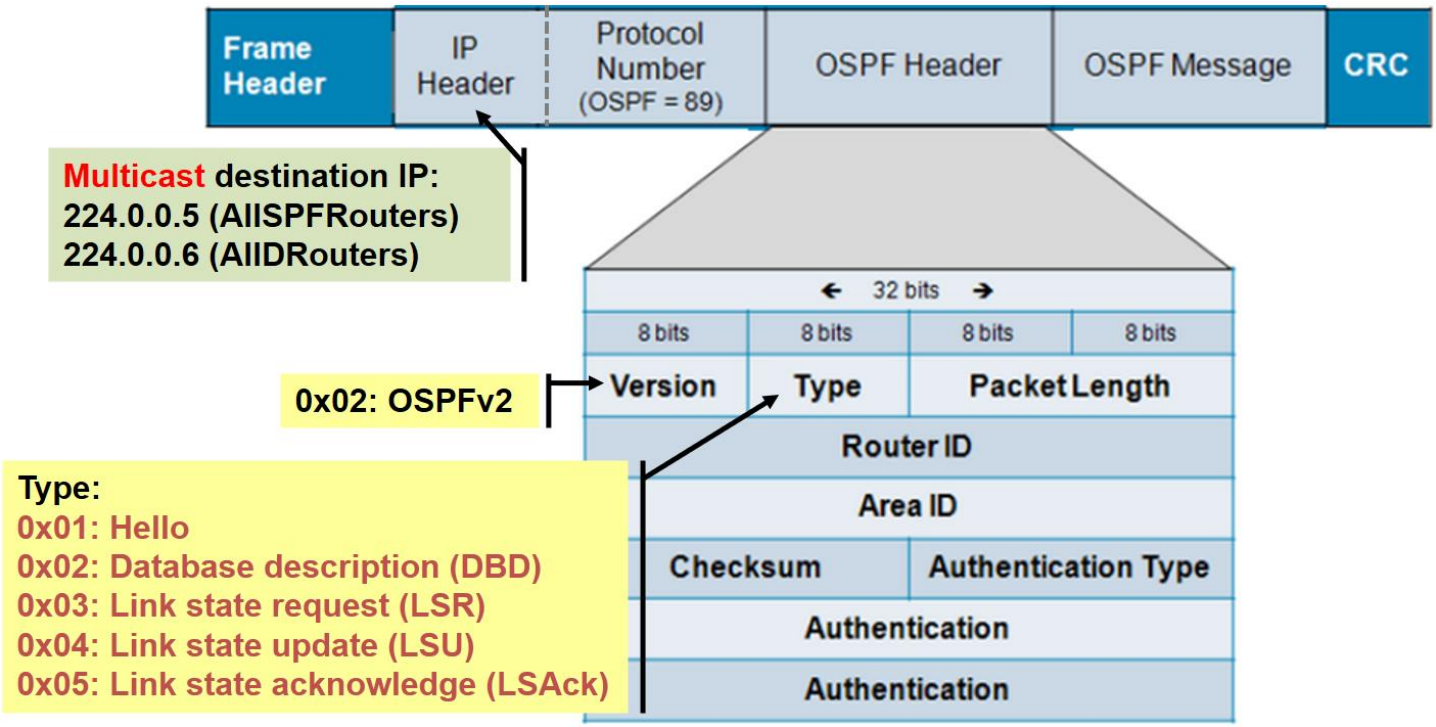

Packet Types

OSPF Type	Name	Purpose (What It Does)
1	**Hello**	Discover/maintain neighbors; DR/BDR election on multiaccess networks
2	**DBD (Database Description)**	Summarizes LSDB contents using **LSA headers only** (efficient comparison)
3	**LSR (Link State Request)**	Requests missing/newer LSAs from a neighbor
4	**LSU (Link State Update)**	Sends LSAs (full details) requested or flooded
5	**LSAck (Link State Acknowledge)**	Acknowledges receipt of LSUs/LSAs

OSPF Database Description Packet

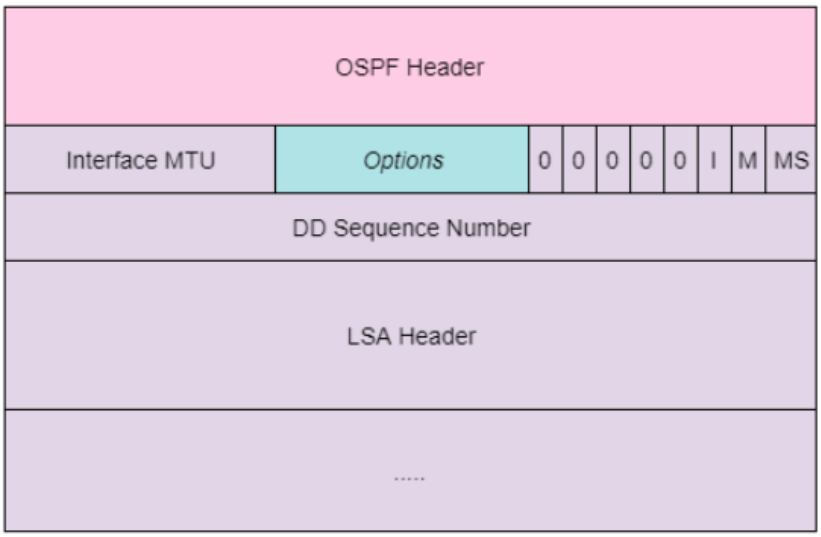

OSPF Hello Packet

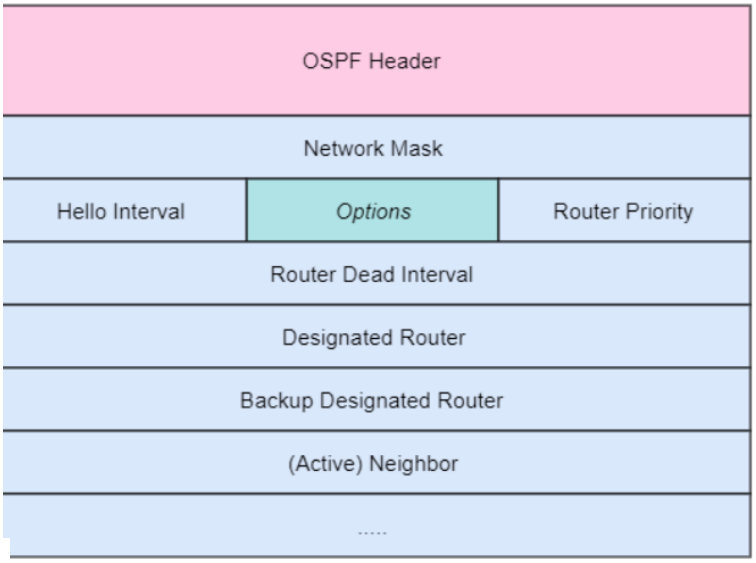

OSPF Link State Request Packet

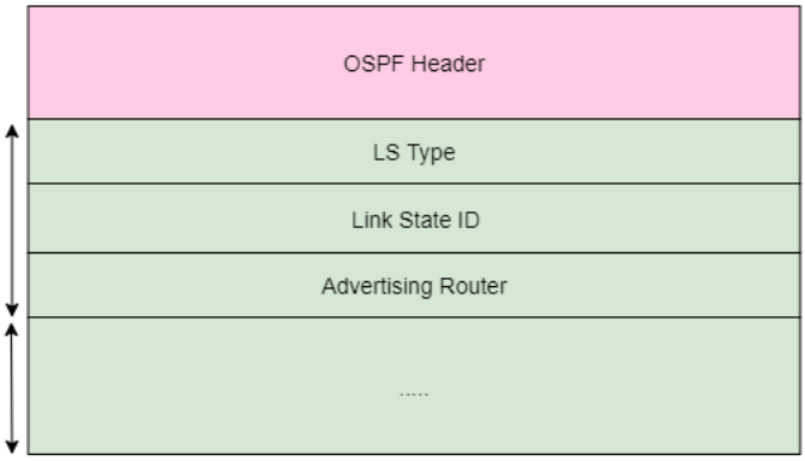

OSPF Link State Update Packet

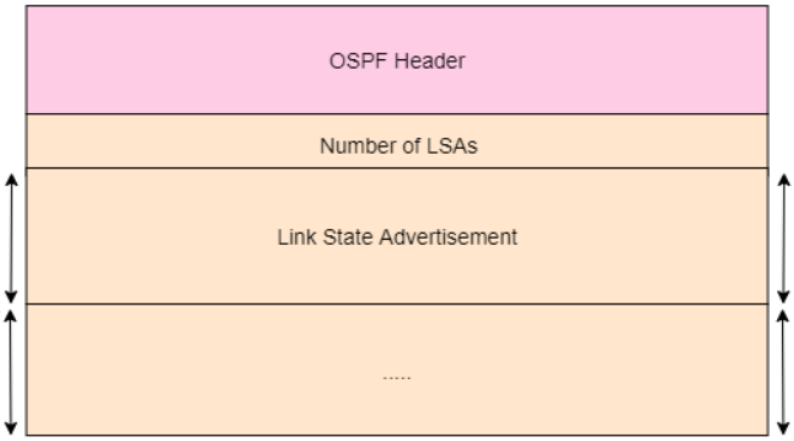

OSPF Link State Acknowledgement Packet

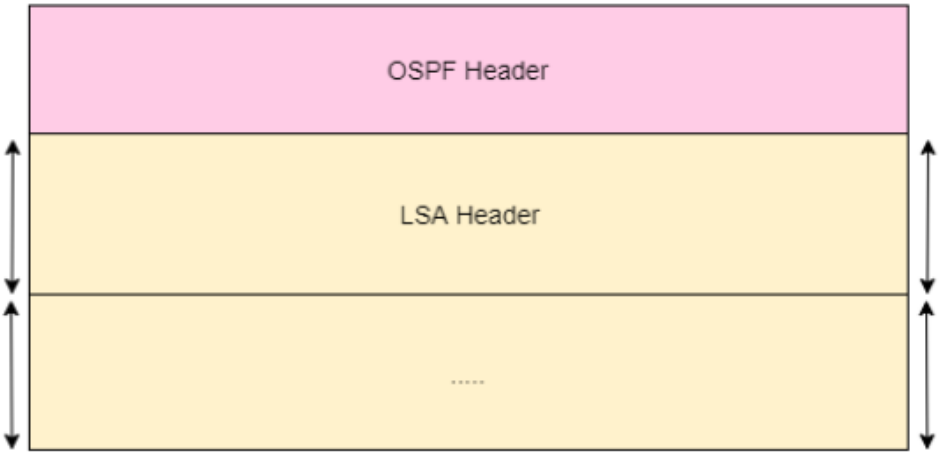

Phase 1: Discover Adjacent Neighboring Routers

- Enable OSPF on interfaces (via network … wildcard … area … or ip ospf … area …).
- Interface state transitions **Down** → **Init** and starts sending **Type 1 Hello** packets.
- **Hello neighbor discovery logic**
  - If no Hellos received yet: sends Hello with no neighbor list.
  - After receiving Hellos: includes neighbor **Router IDs** in the Hello **Neighbor field**.
  - When a router receives a Hello that lists **its own Router ID**, it reaches **2-Way** state.
- **Multiaccess Ethernet optimization (DR/BDR)**
  - To reduce excessive exchanges, routers elect a **Designated Router (DR)** and **Backup Designated Router (BDR)**.
  - Non-DR routers (**DROTHER**) primarily exchange OSPF info with DR/BDR.
  - Election criteria: highest **OSPF priority** wins (default 1), then highest **Router ID** if tied.
  - Election is **non-preemptive** after completion (new arrivals don't take over).

Phase 2: Learn Network Topology

- Routers move from **2-Way** → **ExStart** → **Exchange** to begin database synchronization.
- Exchange **Type 2 DBD (Database Description)** packets:
  - DBD contains **LSA headers** (summaries) so routers can compare databases efficiently.
- If differences exist, routers enter **Loading**:
  - **Type 3 LSR** requests missing/newer LSAs.
  - **Type 4 LSU** sends the requested LSAs (updates).
  - **Type 5 LSAck** acknowledges LSUs.
- When link-state databases are synchronized, neighbors reach **Full** state.

Phase 3: Compute Lowest-Cost Paths to Remote Subnets

- Each router independently runs **Dijkstra (SPF)** on the learned topology (LSDB).
- Computes **lowest-cost paths** based on summed **interface costs**.
- Installs best routes into the routing table:
  - OSPF-learned routes marked **O**.
  - Metric shown as **[110/cost]** where **110** is OSPF administrative distance and **cost** is total path cost.
- If multiple equal-cost best paths exist, OSPF can install multiple routes (ECMP) for load balancing.

/24	/25	/26	/27	/28	/29	/30
.0	.128	.192	.224	.240	.128	.252
00000000	10000000	11000000	11100000	11110000	11111000	11111100
0-255	0-127	0-63	0-31	0-15	0-7	0-3
						4-7
					8-18	8-11
						12-15
				16-31	16-23	16-19
						20-23
					24-31	24-27
						28-31
			32-63	32-47	32-39	32-35
						36-39
					40-47	40-43
						44-47
				48-63	48-55	48-51
						52-55
					56-63	56-59
						60-63
		64-127	64-95	64-79	64-71	64-67
						68-71
					72-79	72-75
						76-79
				80-95	80-87	80-83
						84-87
					88-95	88-91
						92-95
			96-127	96-111	96-103	96-99
						100-103
					104-111	104-107
						108-111
				112-127	112-119	112-115
						116-119
					120-127	120-123
						124-127
	128-255	128-191	128-159	128-143	128-135	128-131
						132-135
					136-143	136-139
						140-143
				144-159	144-151	144-147
						148-151
					152-159	152-155
						156-159
			160-191	160-175	160-167	160-163
						164-167
					168-175	168-171
						172-175
				176-191	176-183	176-179
						180-183
					184-191	184-187
						188-191
		192-255	192-223	192-207	192-199	192-195
						196-199
					200-207	200-203
						204-207
				208-223	208-215	208-211
						212-215
					216-223	216-219
						220-223
			224-255	224-239	224-231	224-227
						228-231
					232-239	232-235
						236-239
				240-255	240-247	240-243
						244-247
					248-255	248-251
						252-255

Topic (from doc)	Configuration Commands	Verify / Debug / Clear Commands
Access vs Trunk Ports + DTP	**Access port**: int gi0/1switchport mode accessswitchport access vlan 10 **Trunk port**: int gi0/24switchport mode trunkswitchport trunk allowed vlan 10,20switchport trunk native vlan 99 **Disable DTP**: int gi0/24switchport nonegotiate	show vlan briefshow interfaces trunkshow interfaces gi0/24 switchport
Inter-VLAN Routing (Router-on-a-Stick / L3 Switch SVIs)	**Router-on-a-stick**: int g0/0.10encapsulation dot1q 10ip address 10.10.10.1 255.255.255.0 **SVI (L3 switch)**: vlan 10int vlan 10ip address 10.10.10.1 255.255.255.0no shutip routing	show ip interface briefshow interfaces trunkshow ip route
ARP	*(Normally no "enable" config; ARP is automatic on IPv4 Ethernet)*	show ip arpclear ip arpping <ip> *(forces ARP if needed)*
EtherChannel (Static / PAgP / LACP) + L2 vs L3	**Member links (common pre-req)**: int range gi0/1-2switchport *(for L2 EC)* **Static**: channel-group 1 mode on **PAgP**: channel-group 1 mode desirable *(or auto)* **LACP**: channel-group 1 mode active *(or passive)* **Port-channel (L2 trunk)**: int po1switchport mode trunkswitchport trunk allowed vlan 10,20 **Port-channel (L3 routed)**: int range gi0/1-2no switchportchannel-group 1 mode activeint po1no switchportip address <ip> <mask>	show etherchannel summaryshow etherchannel port-channelshow interfaces port-channel 1show lacp neighbor / show pagp neighbor
RSTP (Rapid Spanning Tree) + roles/states	**Enable rapid-PVST (Cisco)**: spanning-tree mode rapid-pvst **Set root (per VLAN)**: spanning-tree vlan 10 root primaryspanning-tree vlan 10 root secondary *(or priority <value>)* **Edge port hardening**: int gi0/10spanning-tree portfastspanning-tree bpduguard enable	show spanning-tree summaryshow spanning-tree vlan 10show spanning-tree interface gi0/2 detaildebug spanning-tree events *(use carefully)*
FHRP / HSRP (default gateway redundancy)	**HSRP on SVI/interface**: int vlan 10standby 10 ip 10.10.10.1standby 10 priority 110standby 10 preempt	show standby briefshow standbydebug

	Track uplink (optional): standby 10 track gi0/49 20	standby *(use carefully)*show ip arpshow mac address-table dynamic
Static Routing (standard/default/floating/summary) *(topic referenced in your notes set)*	**Next-hop**: ip route 172.16.2.0 255.255.255.0 172.16.4.2 **Exit-interface (ptp/serial)**: ip route 172.16.2.0 255.255.255.0 s0/0/0 **Fully specified**: ip route 172.16.2.0 255.255.255.0 s0/0/0 172.16.4.2 **Default route**: `ip route 0.0.0.0 0.0.0.0 <next-hop	exit-int **Floating default**: ip route 0.0.0.0 0.0.0.0 5 **Summary**: ip route 200.23.16.0 255.255.240.0 `
OSPFv2 (phases, packet types, DR/BDR)	**Enable OSPF (network cmd)**: router ospf 1network 10.0.0.0 0.255.255.255 area 0 **Enable per-interface**: int gi0/0ip ospf 1 area 0 **Set router-id**: router ospf 1router-id 1.1.1.1 **Passive interface**: router ospf 1passive-interface gi0/1 **Inject default route**: router ospf 1default-information originate **Reference bandwidth**: router ospf 1auto-cost reference-bandwidth 10000	show ip ospfshow ip ospf interface briefshow ip ospf neighborshow ip ospf databaseshow ip route ospfdebug ip ospf adj *(use carefully)*