EWT104-DA10 Product Specifications

Chengdu Ebyte Electronic Technology Co.,Ltd.

1 Product Introduction

EWT104-DA10 is a complete set of test products for EWM104-BT5125(xxx) series audio Bluetooth modules, for customers to test and develop, greatly reducing the difficulty of customers' testing and development. This manual describes how to use the test board. For more details about EWM104-BT5125(xxx) , please refer to the user manual of EWM104-BT5125(xxx).

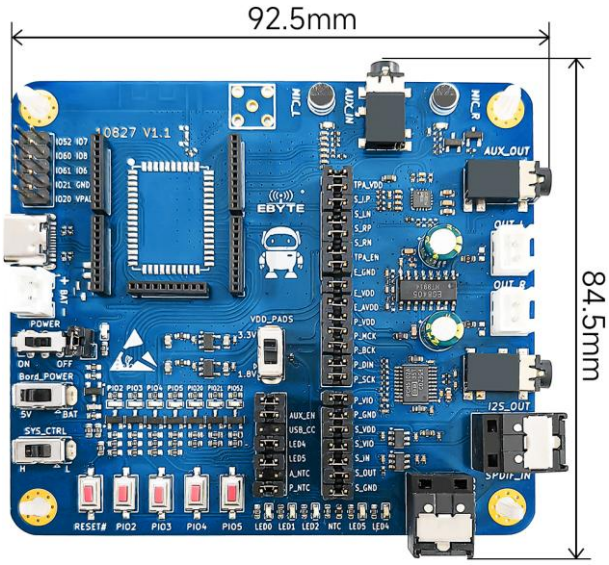

1.1. Dimensions, interface description

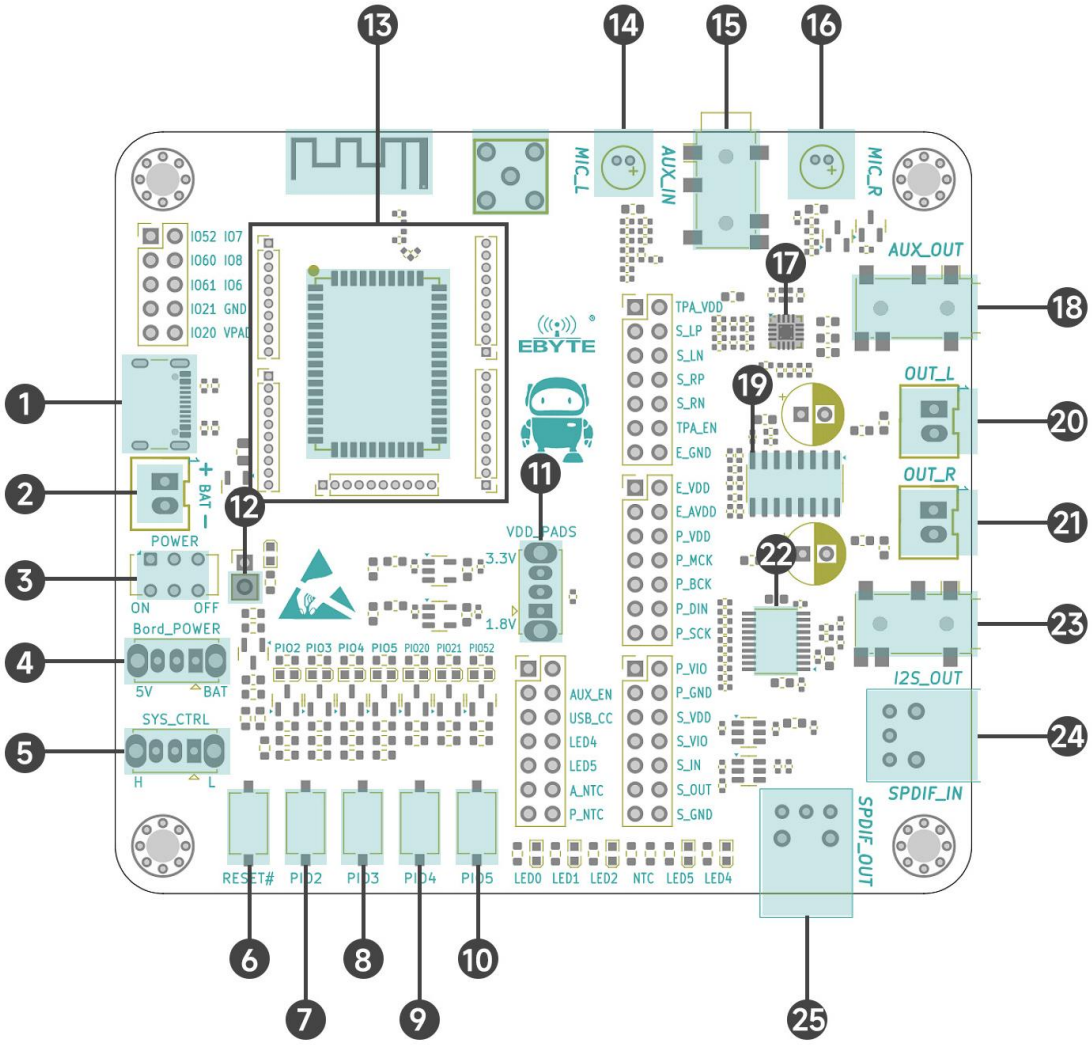

Serial number	definition	Functional Description
1	USB_IN	5V power supply for the baseboard, connected to the USB port of EWM104-BT5125
2	Battery Connector	Battery input port, connected to VBAT of EWM104-BT5125
3	Power switch	The main power switch on the bottom panel, turn it to ON to turn on the power, and turn it to OFF to turn off the power
4	Baseboard power supply mode selection switch	Switch the power supply mode of the resources on the baseboard. Toggle to 5V to use USB to power the baseboard resources. Toggle to BAT to use batteries to power the baseboard resources.
5	KEY_SYS_CTRL	The default is module power on/off control, user programmable
6	KEY_RESET	Module reset control button, press to reset
7	KEY_PIO2	Default is module play/volume plus button, user

		programmable
8	KEY_PIO3	The default is the module pause/play/volume down button, which can be programmed by the user
9	KEY_PIO4	The default is the module's previous song/pairing button, which is user programmable.
10	KEY_PIO5	The default is the module's next song/disconnect button, which can be programmed by the user
11	IO voltage switch	Used to switch the module VDD_PADS and the digital IO power supply voltage on the board. Switch to 3.3V for 3.3V power supply and switch to 1.8V for 1.8V power supply
12	Module power supply jumper	Used to measure module operating current
13	1.27mm spacing matrixed	EWT104-QC01Z nstallation location
14	MIC_L	Left channel microphone
15	AUX_IN	The AUX audio input interface can be plugged into a 3.5mm three-stage plug with insertion detection and path switching. After the three-stage 3.5mm plug is inserted, the microphone power supply will be disconnected and the module audio input channel will switch to AUX_IN. After the three-stage 3.5mm plug is unplugged, the microphone power supply is turned on and the module audio input channel switches to the microphone.
16	MIC_R	Right channel microphone
17	Stereo headphone amplifier	Stereo headphone amplifier , input connected to the module AUX output, output connected to the AUX_OUT interface
18	AUX_OUT	The AUX_OUT interface can be inserted with a 3.5mm three-stage or four-stage plug with path switching . When the 3.5mm plug is not inserted, the audio signal output value is 3W stereo amplifier. When a three-stage 3.5mm plug is inserted, the audio signal is output to the AUX_OUT interface.
19	3W Stereo Amplifier	A stereo power amplifier with 3W output power, the input is connected to the stereo headphone amplifier and audio stereo DAC, and the output is connected to the left and right channel speaker interfaces
20	OUT_L	Left channel speaker interface
21	OUT_R	Right channel speaker interface
22	Audio Stereo DAC	Audio stereo DAC with I2S interface, the input is connected to the I2S interface of the module, and the output is connected to I2S_OUT.
23	I2S_OUT	The AUX_OUT interface can be inserted with a 3.5mm three-stage or four-stage plug with path switching . When the 3.5mm plug is not inserted, the audio signal output value is a

		3W stereo amplifier. When a three-stage 3.5mm plug is inserted, the audio signal is output to the I2S_OUT interface.
24	SPDIF_IN	Optical audio input interface
25	SPDIF_OUT	Optical audio output interface

Copyright ©2012－2025 , Chengdu Ebyte Electronic Technology Co., Ltd.

2. Quick Start

2.1. Test Preparation

2.1.1. Hardware Hookup

Please prepare the EWT104-DA10 with EWM104-BT512 (DAC) soldered , TYPE-C USB cable , 3.5mm plug earphone or speaker, XH2.54 connector speaker*2, audio fiber cable, insert the TYPE-C cable into the TYPE-C USB port, insert the 3.5mm plug earphone or speaker into the audio output terminal, according to the different EWM104-BT5125 models soldered, the DAC version will insert the 3.5mm plug into the AUX_OUT interface, the I2S version will insert the 3.5mm plug into the I2S_OUT interface, and the SPDIF version will insert the audio fiber cable into the SPDIF_OUT interface. Insert the XH2.54 connector speaker*2 into the OUT_L and OUT_R interfaces.

The following diagram demonstrates the DAC version wiring:

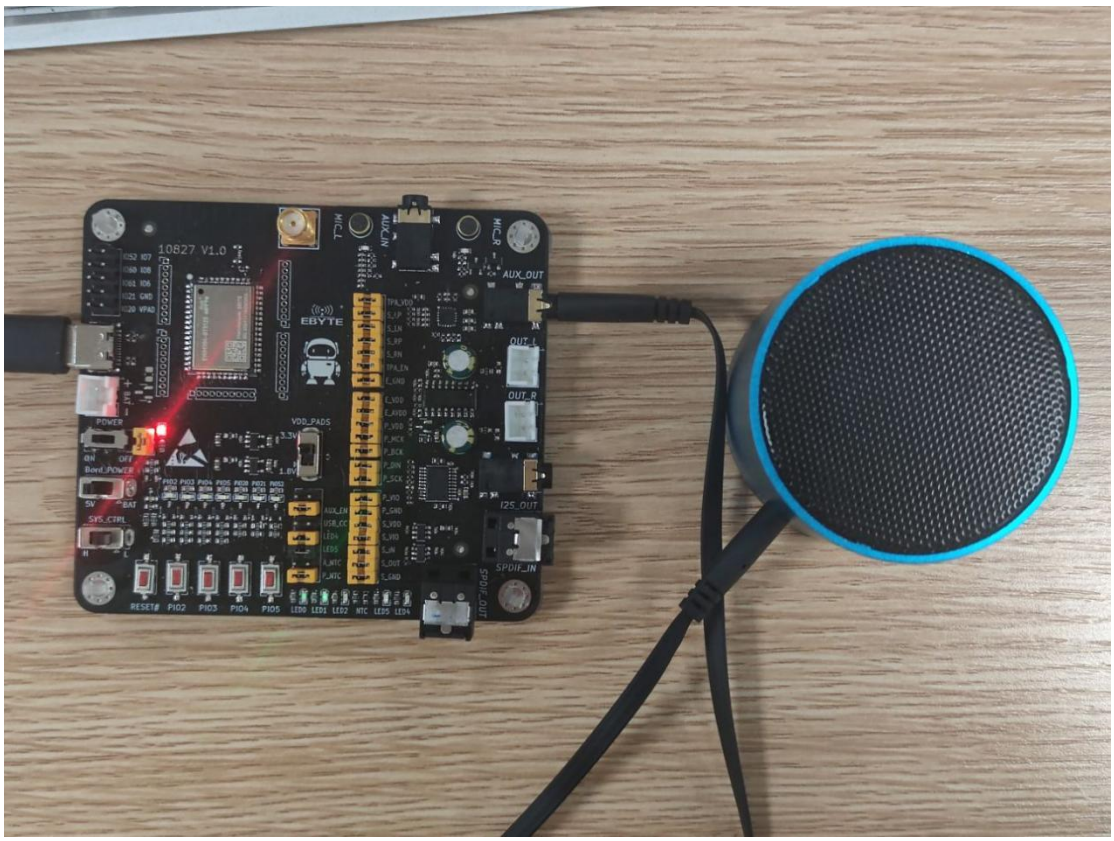

2.1.2. Pairing and use

Use your mobile phone to turn on Bluetooth, click Add New Device or Search Available Devices, and search for the Bluetooth name "qcc5125"

① Click Pair to allow pairing

② After pairing is successful, you can see "qcc5125" in the connected Bluetooth devices

③ After that, users can play audio through the mobile phone, and output it to the speaker through the bottom board AUX_OUT. In the factory firmware, the following button functions are prepared for customers.

KEY_PIO2: Short press to play, long press to increase volume

KEY_PIO3: Short press to pause playback, long press to reduce volume

KEY_PIO4: Short press to switch to the previous song, long press to pair the keys

KEY_PIO5: Short press to switch to the next song, long press to disconnect and clear the Bluetooth connection

Revision History

Version	Revision Date	Revision Notes	Maintainer
1.0	2025-02-27	Initial release	Bin
1.1	2025-04-08	Modifying product images	Bin

About Us

Sales hotline: 4000 - 330 - 990
Technical support: support@cdebyte.com
Official website: https://www.cdebyte.com
Address: B2 Mould Park, 199# Xiqu Ave, High-tech District, Sichuan, China

成都亿佰特电子科技有限公司
Chengdu Ebyte Electronic Technology Co.,Ltd.

Copyright ©2012－2025 , Chengdu Ebyte Electronic Technology Co., Ltd.