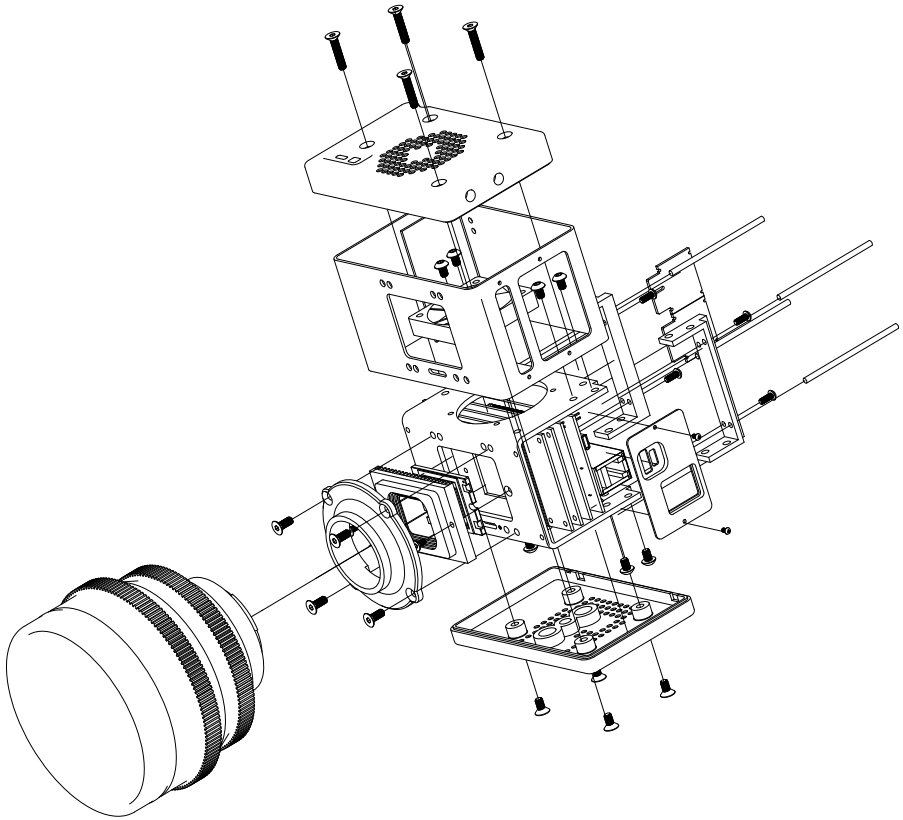

DRAWN -	26.04.2016	
CHECKED		TITLE
QA		
MFG		
APPROVED		
		SIZE C / DWG NO / REV
		SCALE / SHEET 1 OF 1