REVISIONS				
ZONE	REV.	DESCRIPTION	DATE	APPROVED
A4, B3, B4	A	ADD RADIUS TO OUTSIDE EDGE TO PREVENT BREAKAGE OF TABS	3/30/2015	
A3, A4	B	ADDITION OF LOCATING LCD LOCATING RIBS AND THE SHORTENING OF WALLS FOR DISPLAY CABLES	3/30/2015	

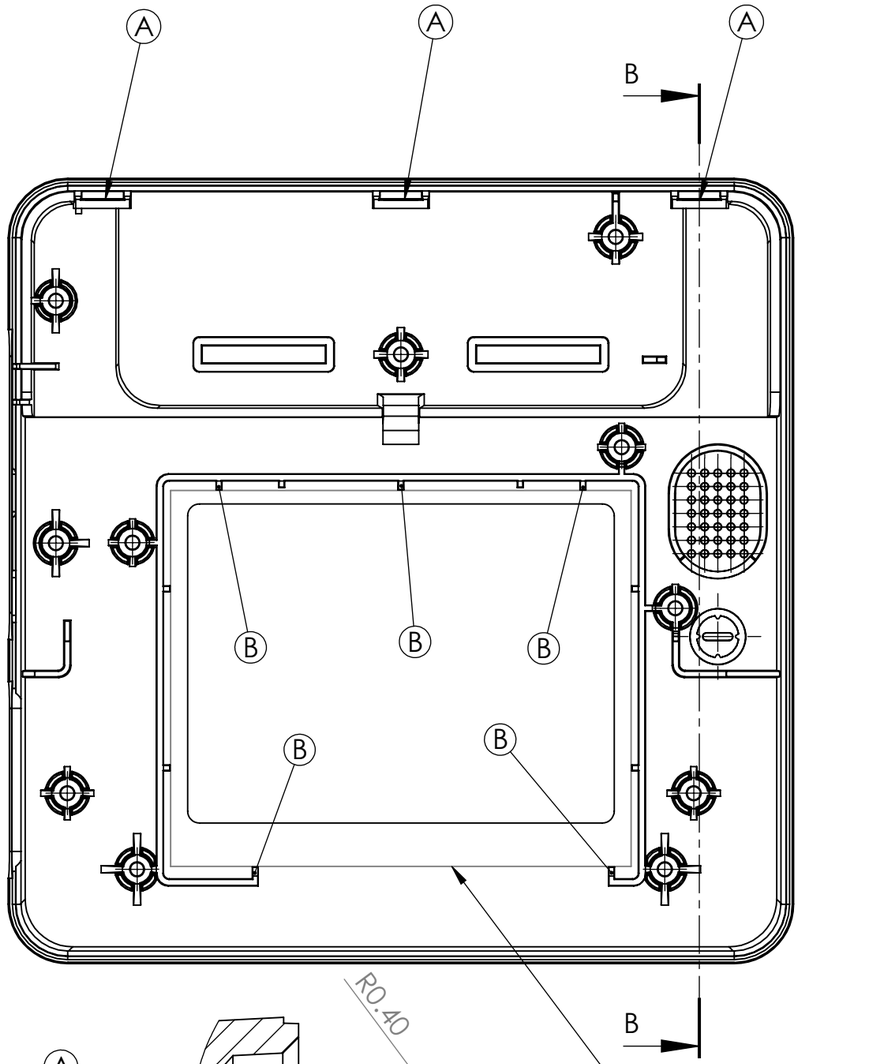

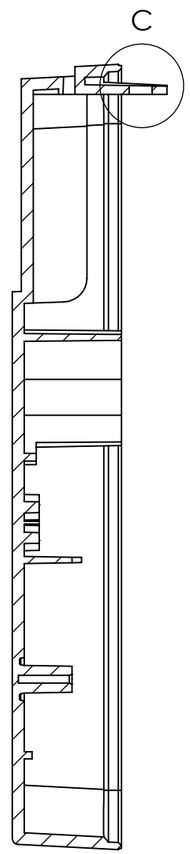

SECTION B-B
SCALE 1 : 1

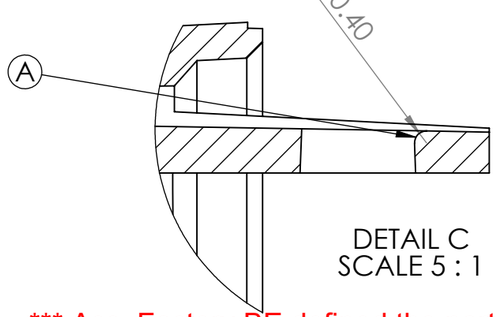

DETAIL C
SCALE 5 : 1

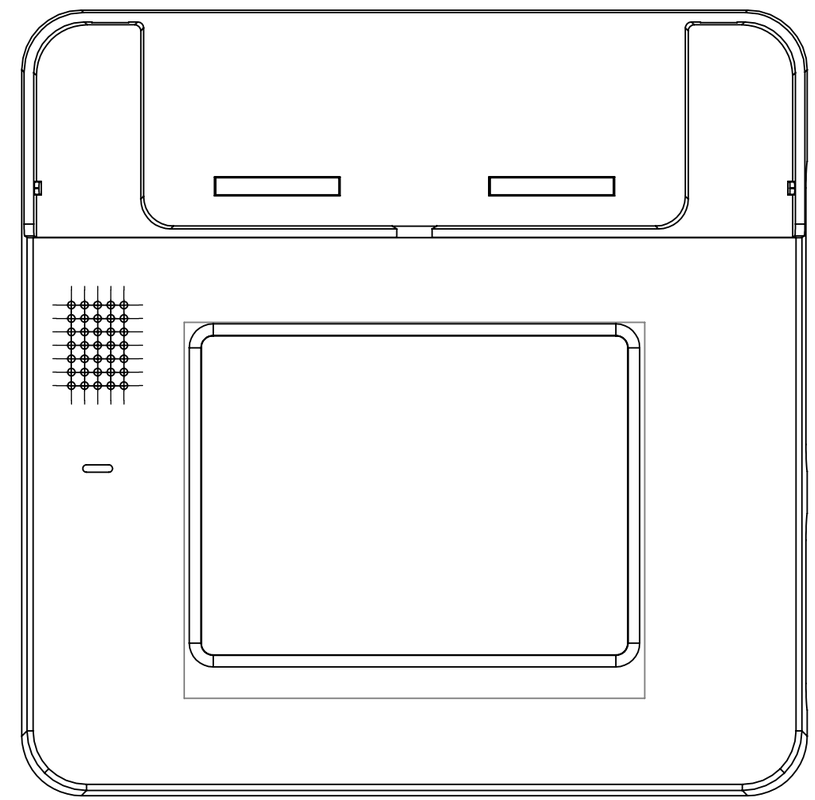

*** Ass. Factory BE defined the part name as: Top cover white
Part Number as: 300-N02541-000V0

PROPRIETARY AND CONFIDENTIAL

THE INFORMATION CONTAINED IN THIS DRAWING IS THE SOLE PROPERTY OF <INSERT COMPANY NAME HERE>. ANY REPRODUCTION IN PART OR AS A WHOLE WITHOUT THE WRITTEN PERMISSION OF <INSERT COMPANY NAME HERE> IS PROHIBITED.

NEXT ASSY | USED ON

APPLICATION

UNLESS OTHERWISE SPECIFIED:

DIMENSIONS ARE IN INCHES
TOLERANCES:
FRACTIONAL ±
ANGULAR: MACH ± BEND ±
TWO PLACE DECIMAL ±
THREE PLACE DECIMAL ±

INTERPRET GEOMETRIC TOLERANCING PER:

MATERIAL

FINISH

DO NOT SCALE DRAWING

	NAME	DATE
DRAWN		
CHECKED		
ENG APPR.		
MFG APPR.		
Q.A.		

COMMENTS:

TITLE:

TOP CASE MODIFICATIONS

SIZE	DWG. NO.	REV
B	13766-4000-R7_TOP_CASE	B

SCALE: 1:2 | WEIGHT: | SHEET 1 OF 1