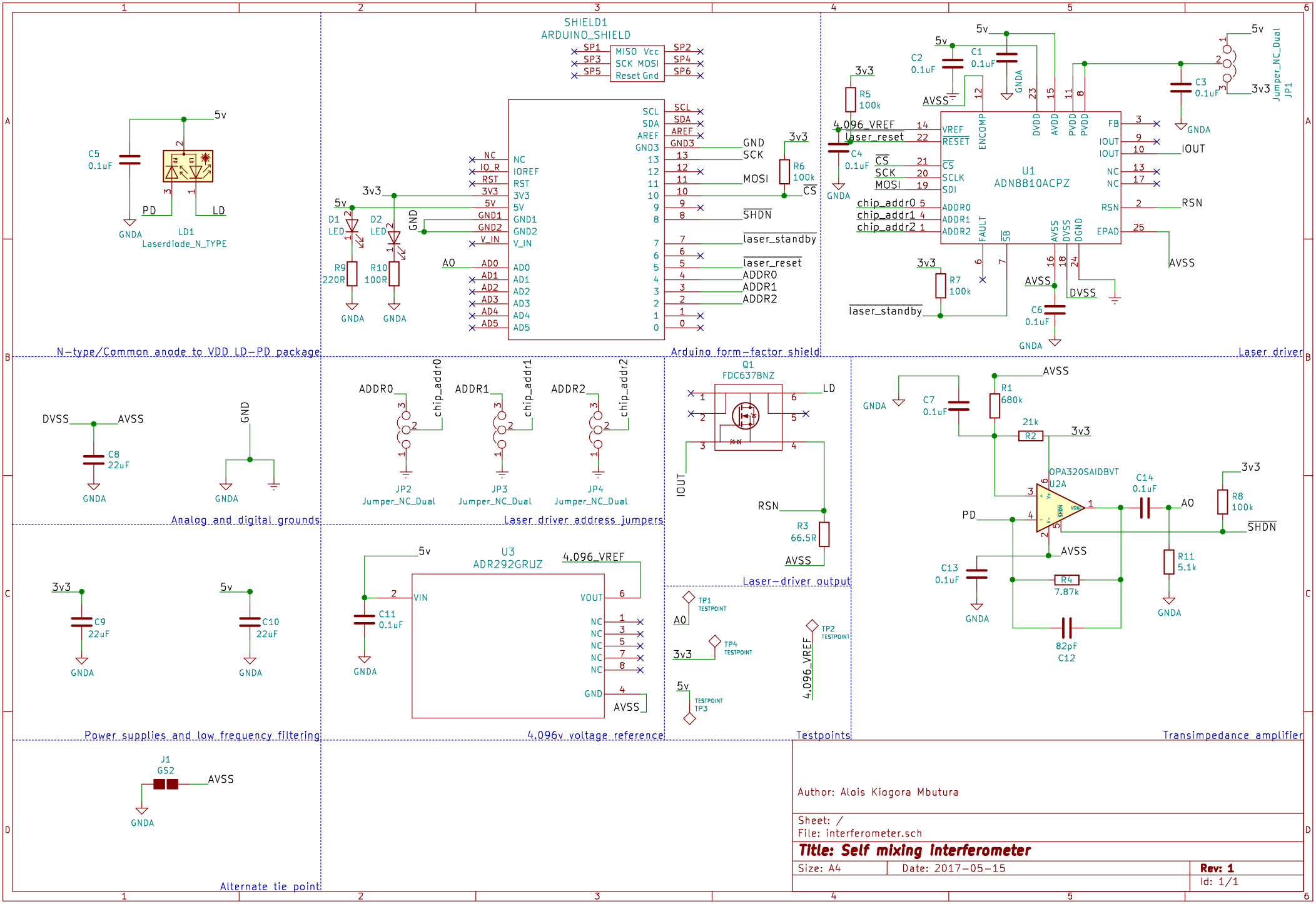
N-type/Common anode to VDD LD-PD package
Arduino form-factor shield
Laser driver
Analog and digital grounds
Laser driver address jumpers
Laser-driver output
Power supplies and low frequency filtering
4.096v voltage reference
Testpoints
Transimpedance amplifier
Alternate tie point
SHIELD1
ARDUINO_SHIELD
U1
ADN8810ACPZ
Q1
FDC637BNZ
U3
ADR292GRUZ
U2A
OPA320SAIDBVT
LD1
Laserdiode_N_TYPE
Jumper_NC_Dual
Author: Alois Kiagora Mbutura
Sheet: /
File: interferometer.sch
Title: Self mixing interferometer
Size: A4
Date: 2017-05-15
Rev: 1
Id: 1/1