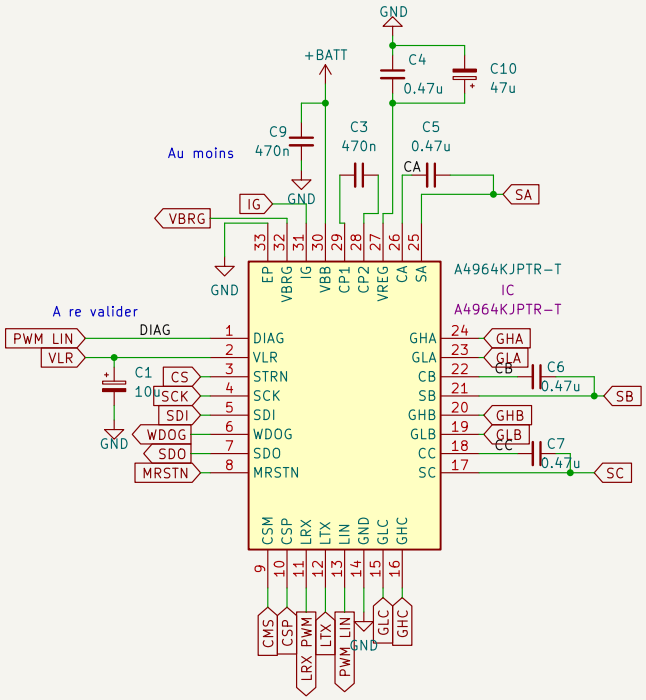

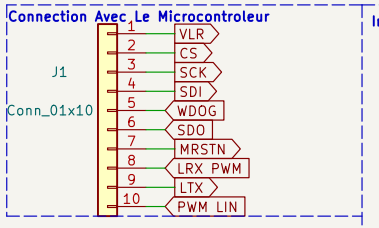

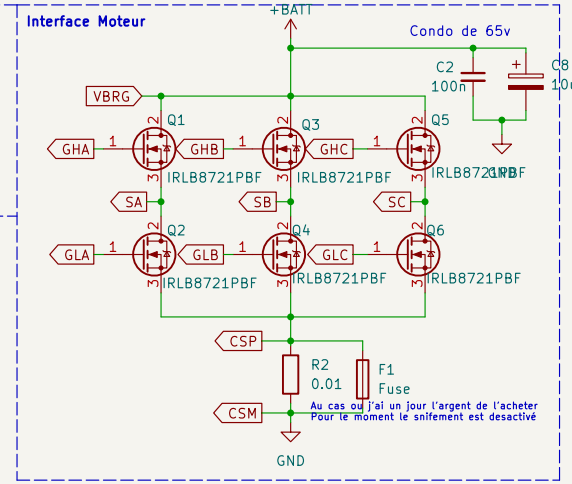

H1 H2 H3 H4

Patrick Kosa-Ivasca		
Sheet: /		
File: Controleur_Moteur_Dc_Brushless.kicad_sch		
Title: Brushless_Motor_Controler		
Size: A4	Date: 28/05/2023	**Rev: 1**
KiCad E.D.A. 8.0.3		Id: 1/1