REVISIONS				
REV.	ZONE	DESCRIPTION	DATE	APPROVED
A		INITIAL RELEASE	03/22/2021	

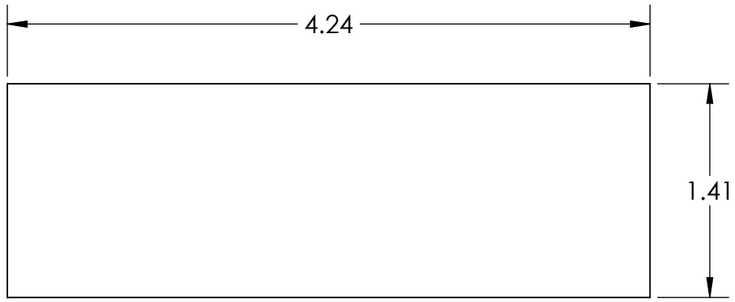

SCALE 1:1

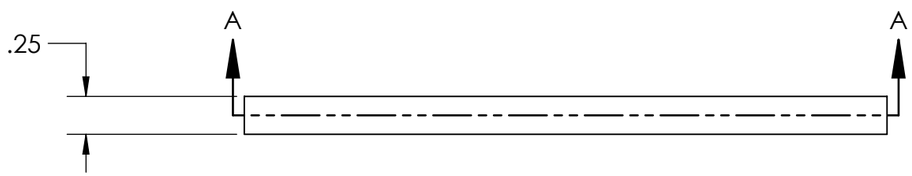

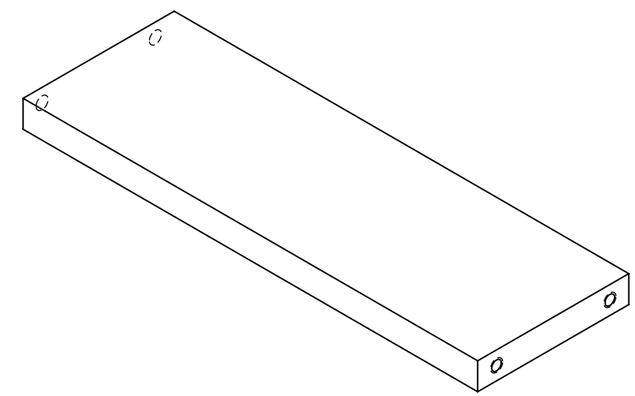

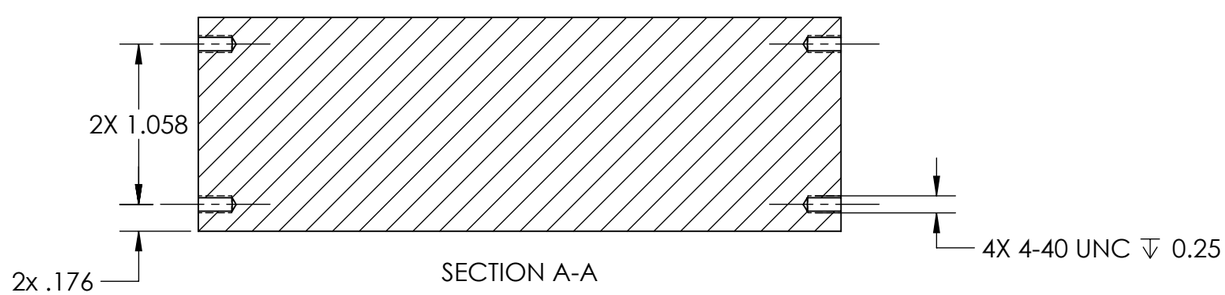

SECTION A-A

PROPRIETARY AND CONFIDENTIAL

THE INFORMATION CONTAINED IN THIS DRAWING IS THE SOLE PROPERTY OF THE UNIVERSITY OF COLORADO. ANY REPRODUCTION IN PART OR AS A WHOLE WITHOUT WRITTEN PERMISSION IS PROHIBITED.

TOLERANCES:
X.X ±0.1
X.XX ±0.010
X.XXX ±0.005
X.X° ±1°

UNLESS OTHERWISE SPECIFIED:
DRAWING UNITS: INCHES
INTERPRET DRAWING PER ASME Y14.100
INTERPRET DIMENSIONS PER ASME Y14.5M

MATERIAL: ALUMINUM
FINISH: NONE

DRAWN: G.KIROLLOS	DATE: 3/31/2021	
CHECKER: P.GREG	DATE: 3/31/2021	
MANUFACTURING ENGINEER: P.GREG	DATE: 3/31/2021	

UNIVERSITY OF COLORADO
1111 ENGINEERING DRIVE
BOULDER, CO 80309-0427
MCEN 1025

DESCRIPTION: MOTOR VERTICAL HOUSING

PART NUMBER: COMPD - 2 | REV: A

SIZE: B | SHEET: 1 of 1

SOLIDWORKS Educational Product. For Instructional Use Only.